FIG. 1

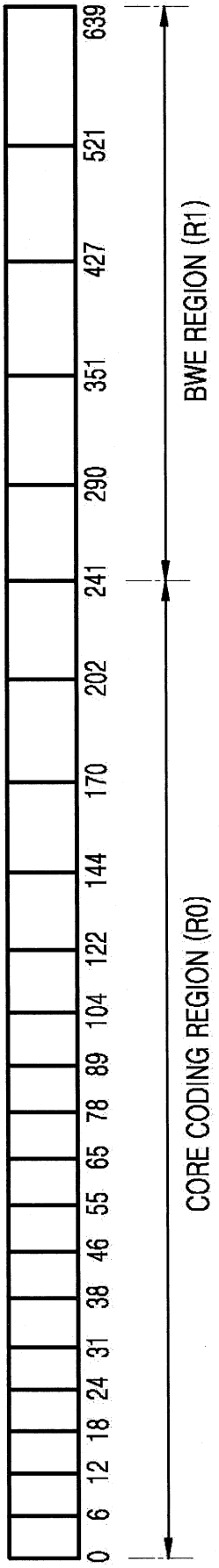
0
6
12
18
24
31
38
46
55
65
78
89
104
122
144
170
202
241
290
351
427
521
639
CORE CODING REGION (R0)
BWE REGION (R1)

FIG. 2A

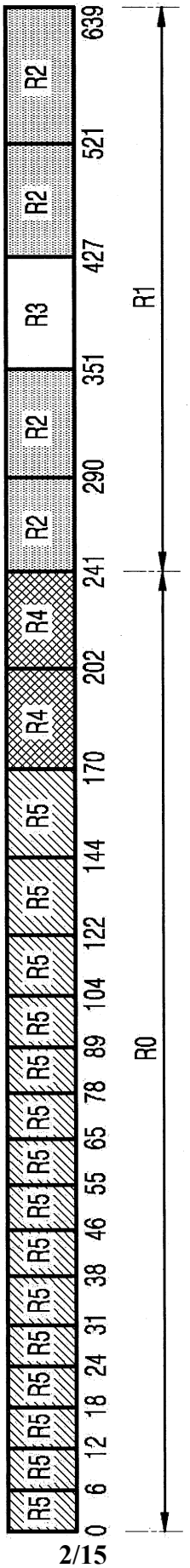
R5
R5
R5
R5
R5
R5
R5
R5
R5
R5
R5
R5
R4
R4
R2
R2
R2
R3
R2
R2
0
6
12
18
24
31
38
46
55
65
78
89
104
122
144
170
202
241
290
351
427
521
639
R0
R1

FIG. 2B

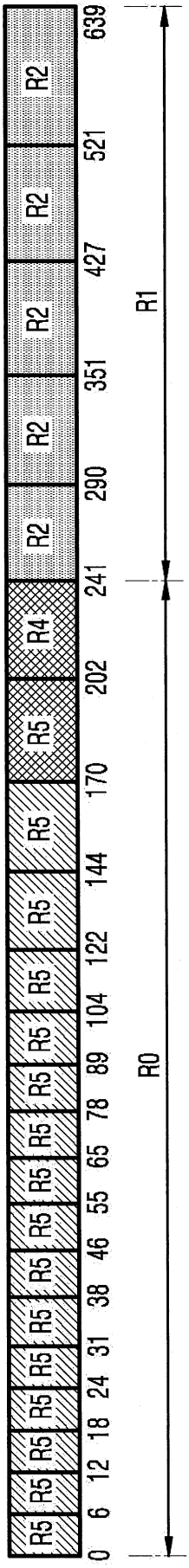
R5
R5
R5
R5
R5
R5
R5
R5
R5
R5
R5
R5
R5
R4
R2
R2
R2
R2
R2
R2
0
6
12
18
24
31
38
46
55
65
78
89
104
122
144
170
202
241
290
351
427
521
639
R0
R1

FIG. 2C

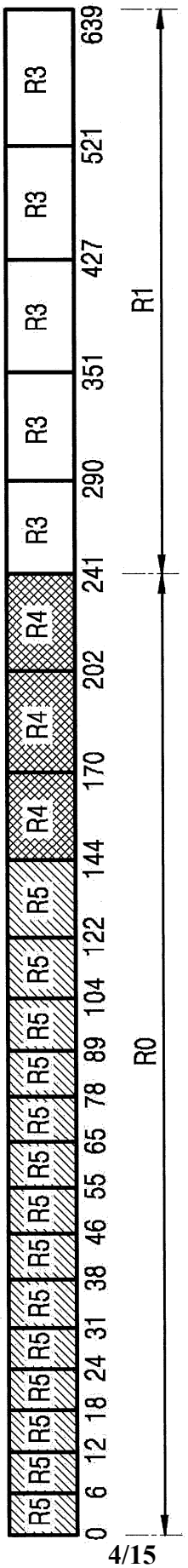
R5
R5
R5
R5
R5
R5
R5
R5
R5
R5
R5
R4
R4
R4
R3
R3
R3
R3
R3
R3
0
6
12
18
24
31
38
46
55
65
78
89
104
122
144
170
202
241
290
351
427
521
639
R0
R1

FIG. 3

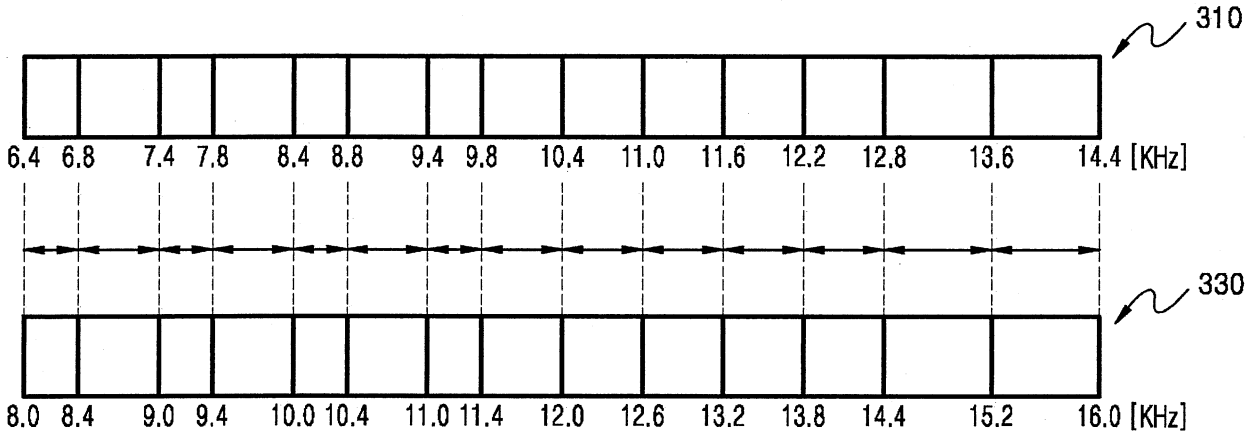
310
6.4 6.8 7.4 7.8 8.4 8.8 9.4 9.8 10.4 11.0 11.6 12.2 12.8 13.6 14.4 [KHz]
330
8.0 8.4 9.0 9.4 10.0 10.4 11.0 11.4 12.0 12.6 13.2 13.8 14.4 15.2 16.0 [KHz]

FIG. 4

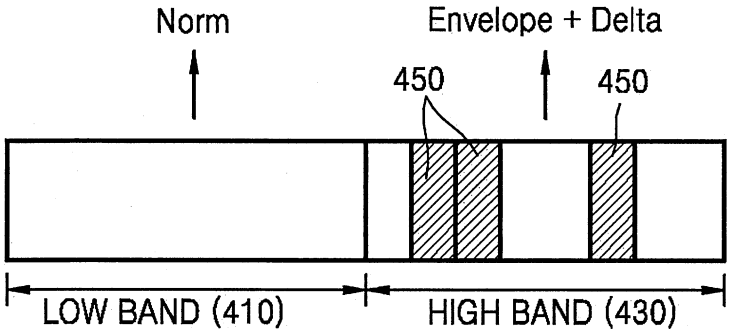
Norm
Envelope + Delta
450
450
LOW BAND (410)
HIGH BAND (430)

FIG. 5

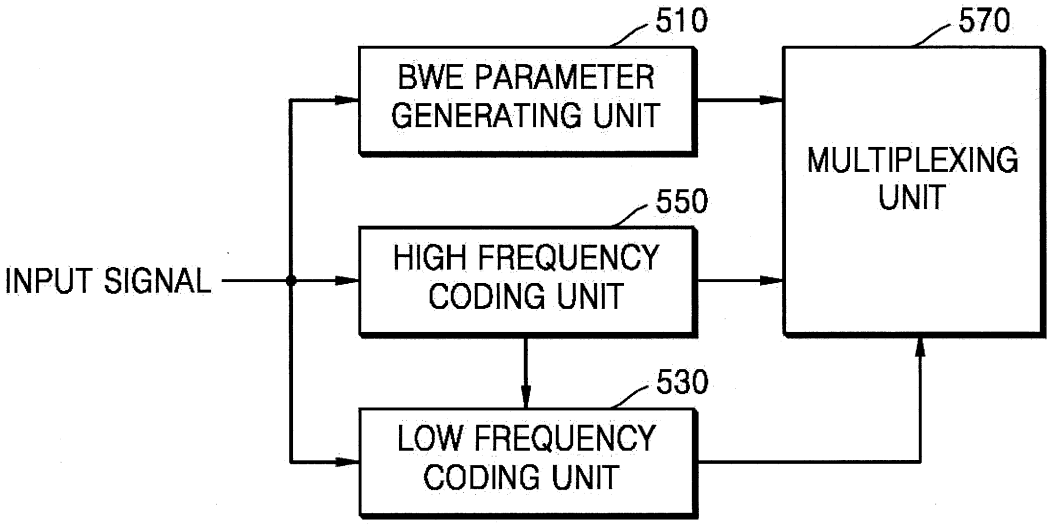
510
BWE PARAMETER GENERATING UNIT
570
MULTIPLEXING UNIT
550
HIGH FREQUENCY CODING UNIT
INPUT SIGNAL
530
LOW FREQUENCY CODING UNIT

FIG. 6

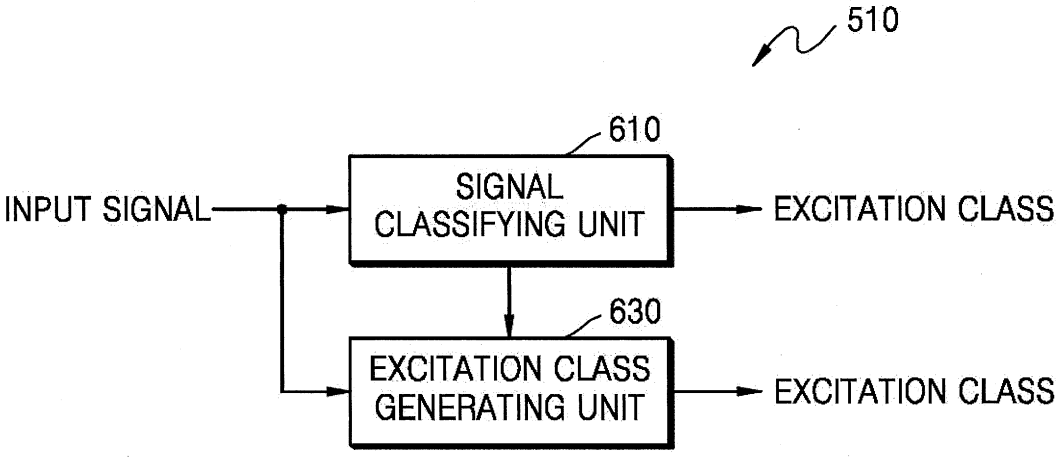
510
610
INPUT SIGNAL
SIGNAL CLASSIFYING UNIT
EXCITATION CLASS
630
EXCITATION CLASS GENERATING UNIT
EXCITATION CLASS

FIG. 7

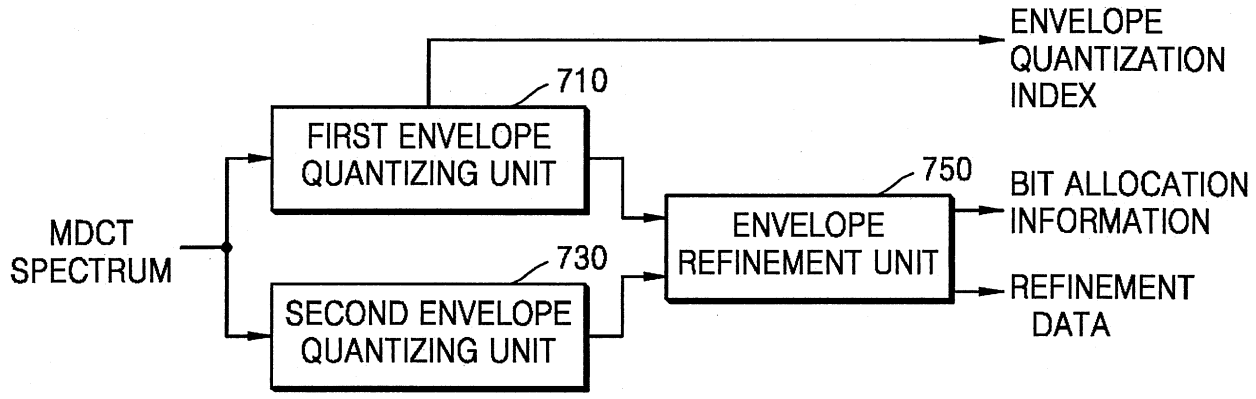
ENVELOPE QUANTIZATION INDEX
710
FIRST ENVELOPE QUANTIZING UNIT
750
BIT ALLOCATION INFORMATION
MDCT SPECTRUM
ENVELOPE REFINEMENT UNIT
730
REFINEMENT DATA
SECOND ENVELOPE QUANTIZING UNIT

FIG. 8

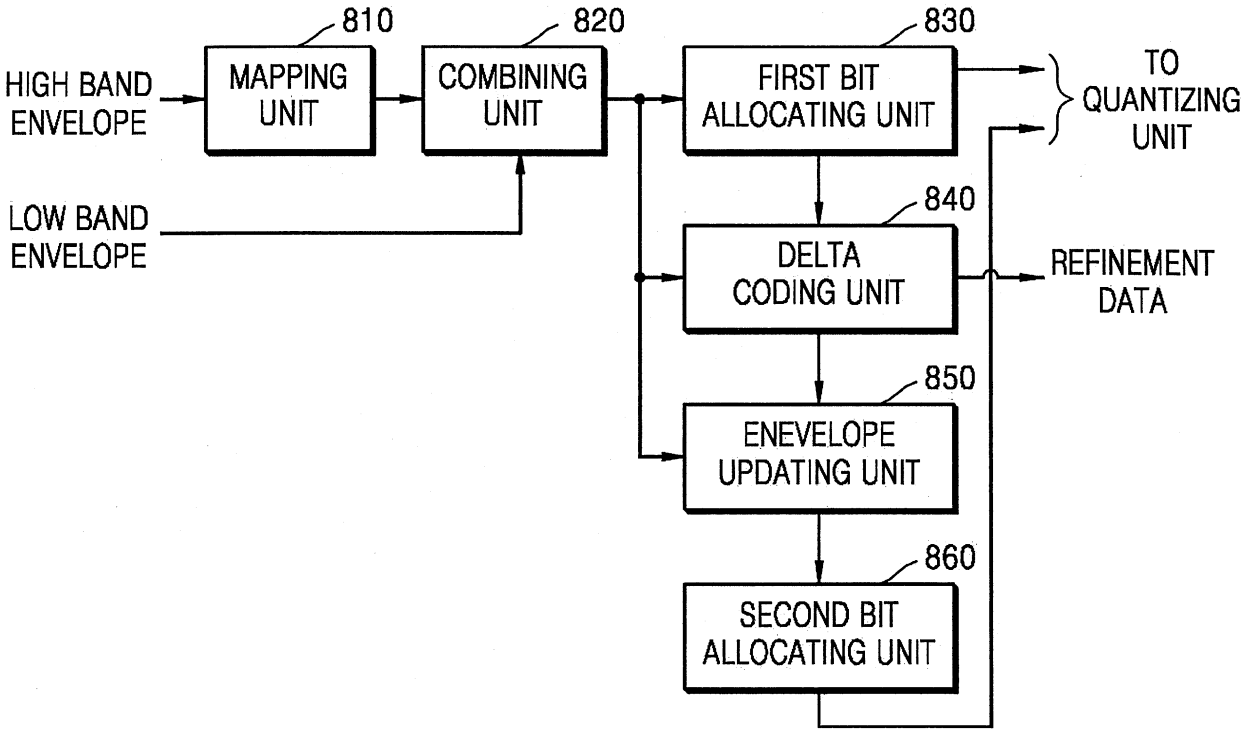
810
820
830
HIGH BAND ENVELOPE
MAPPING UNIT
COMBINING UNIT
FIRST BIT ALLOCATING UNIT
TO QUANTIZING UNIT
LOW BAND ENVELOPE
840
DELTA CODING UNIT
REFINEMENT DATA
850
ENEVELOPE UPDATING UNIT
860
SECOND BIT ALLOCATING UNIT

FIG. 9

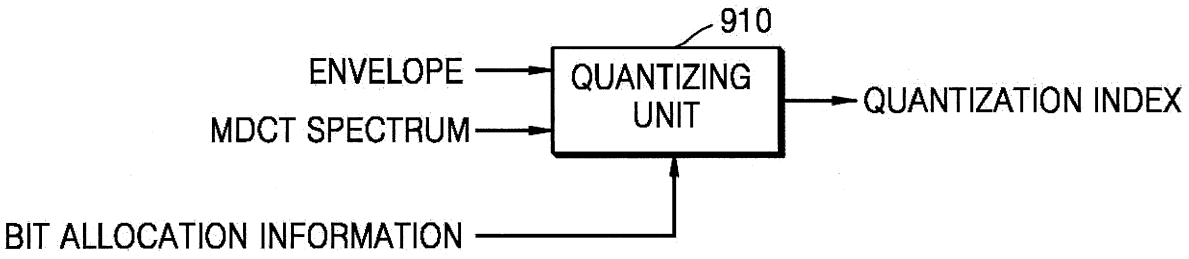
910
ENVELOPE
MDCT SPECTRUM
QUANTIZING UNIT
QUANTIZATION INDEX
BIT ALLOCATION INFORMATION

FIG. 10

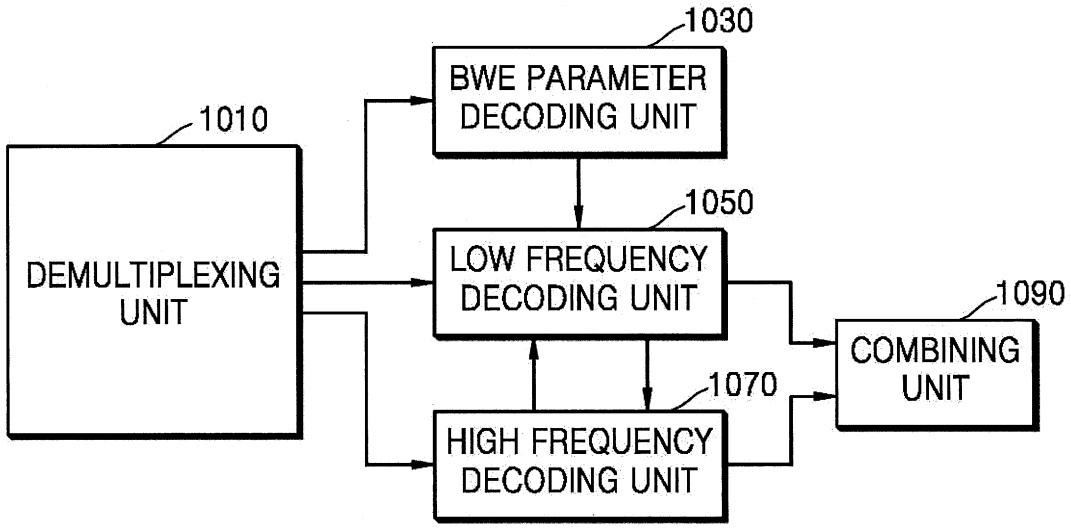
1030
BWE PARAMETER DECODING UNIT
1010
DEMULTIPLEXING UNIT
1050
LOW FREQUENCY DECODING UNIT
1090
COMBINING UNIT
1070
HIGH FREQUENCY DECODING UNIT

FIG. 11

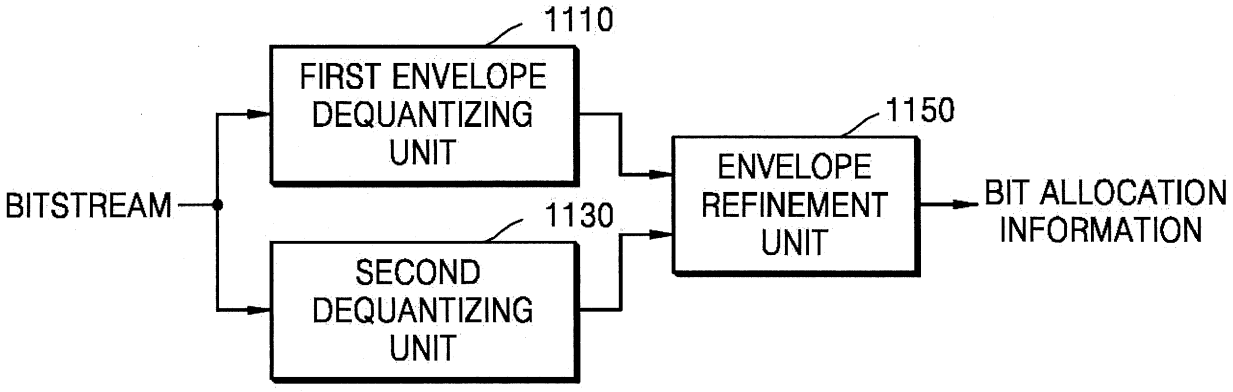
1110
FIRST ENVELOPE DEQUANTIZING UNIT
1150
ENVELOPE REFINEMENT UNIT
BIT ALLOCATION INFORMATION
BITSTREAM
1130
SECOND DEQUANTIZING UNIT

FIG. 12

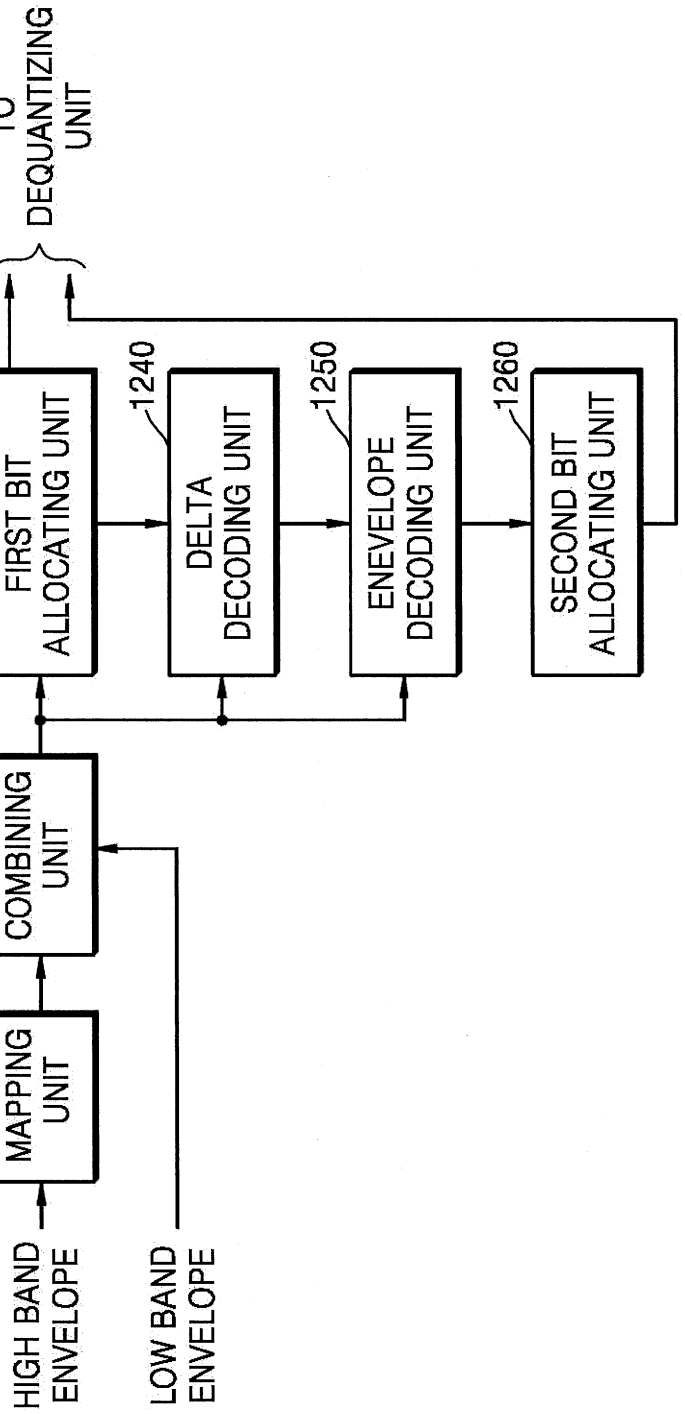
HIGH BAND ENVELOPE
LOW BAND ENVELOPE
1210
MAPPING UNIT
1220
COMBINING UNIT
1230
FIRST BIT ALLOCATING UNIT
1240
DELTA DECODING UNIT
1250
ENEVELOPE DECODING UNIT
1260
SECOND BIT ALLOCATING UNIT
TO DEQUANTIZING UNIT

FIG. 13

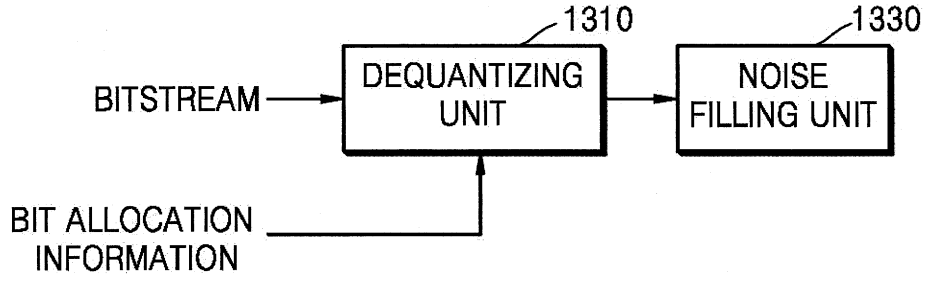
1310
1330
BITSTREAM
DEQUANTIZING UNIT
NOISE FILLING UNIT
BIT ALLOCATION INFORMATION

FIG. 14

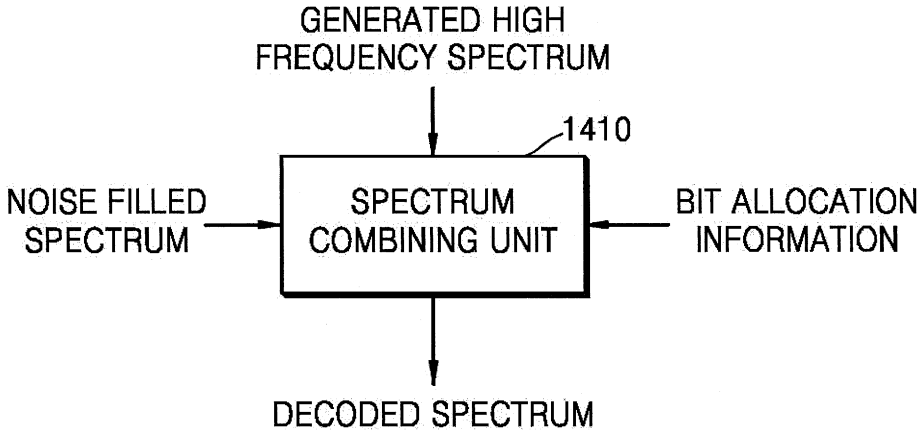
GENERATED HIGH FREQUENCY SPECTRUM
1410
NOISE FILLED SPECTRUM
SPECTRUM COMBINING UNIT
BIT ALLOCATION INFORMATION
DECODED SPECTRUM

FIG. 15

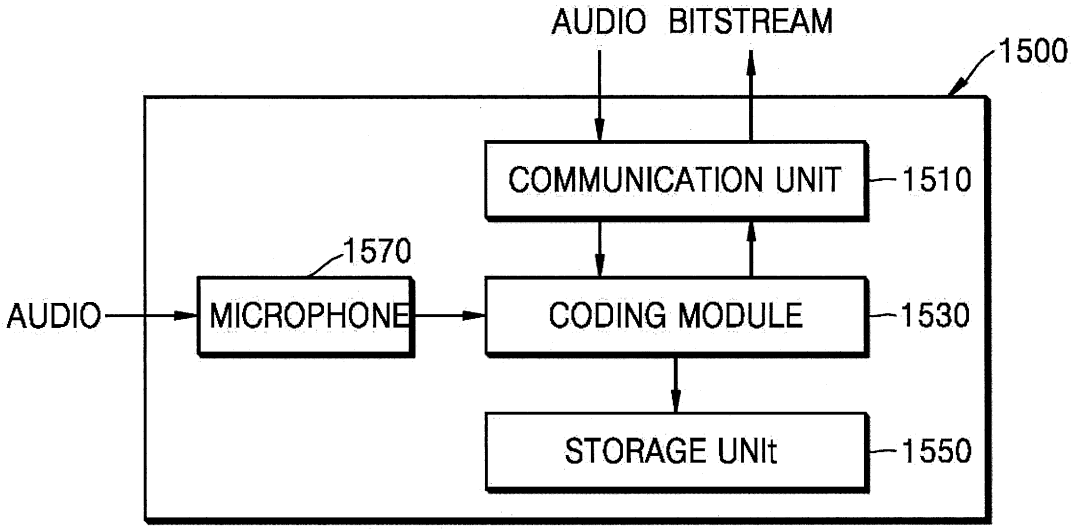
AUDIO BITSTREAM
1500
COMMUNICATION UNIT
1510
1570
AUDIO
MICROPHONE
CODING MODULE
1530
STORAGE UNIt
1550

FIG. 16

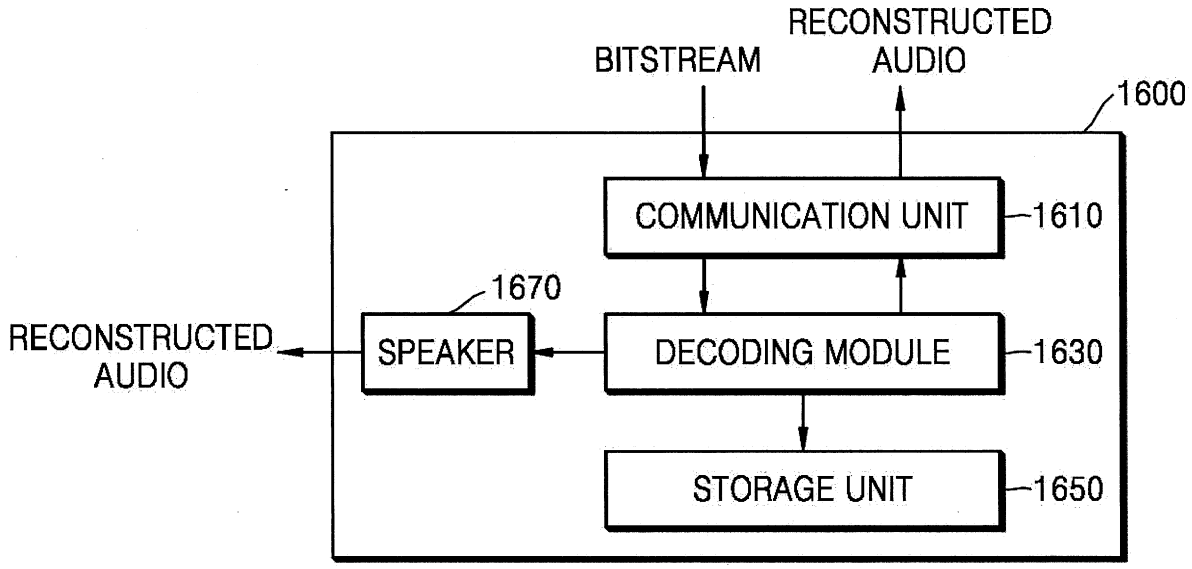
RECONSTRUCTED
AUDIO
BITSTREAM
1600
COMMUNICATION UNIT
1610
1670
RECONSTRUCTED
AUDIO
SPEAKER
DECODING MODULE
1630
STORAGE UNIT
1650

FIG. 17

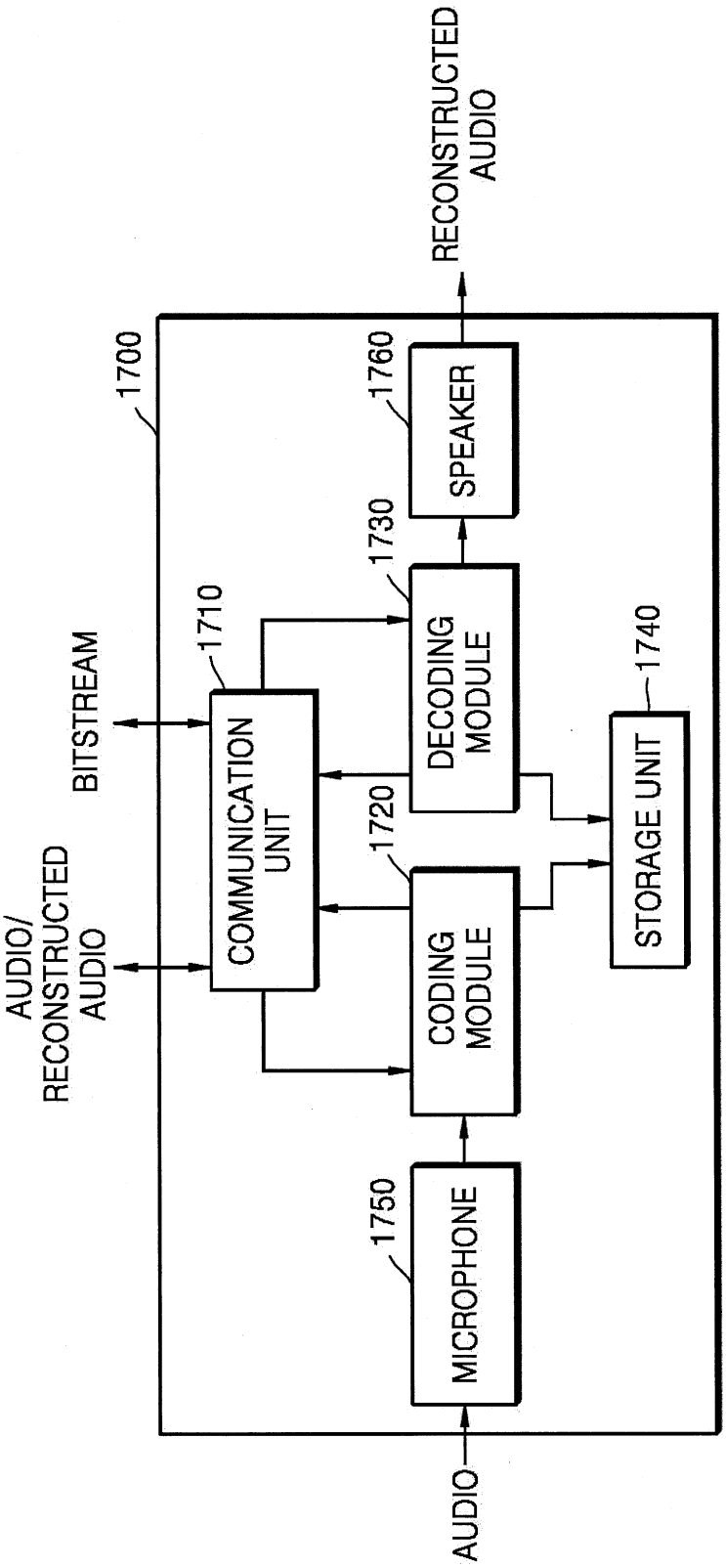
1700
1710
COMMUNICATION UNIT
1720
CODING MODULE
1730
DECODING MODULE
1740
STORAGE UNIT
1750
MICROPHONE
1760
SPEAKER
BITSTREAM
AUDIO/ RECONSTRUCTED AUDIO
AUDIO
RECONSTRUCTED AUDIO

FIG. 18

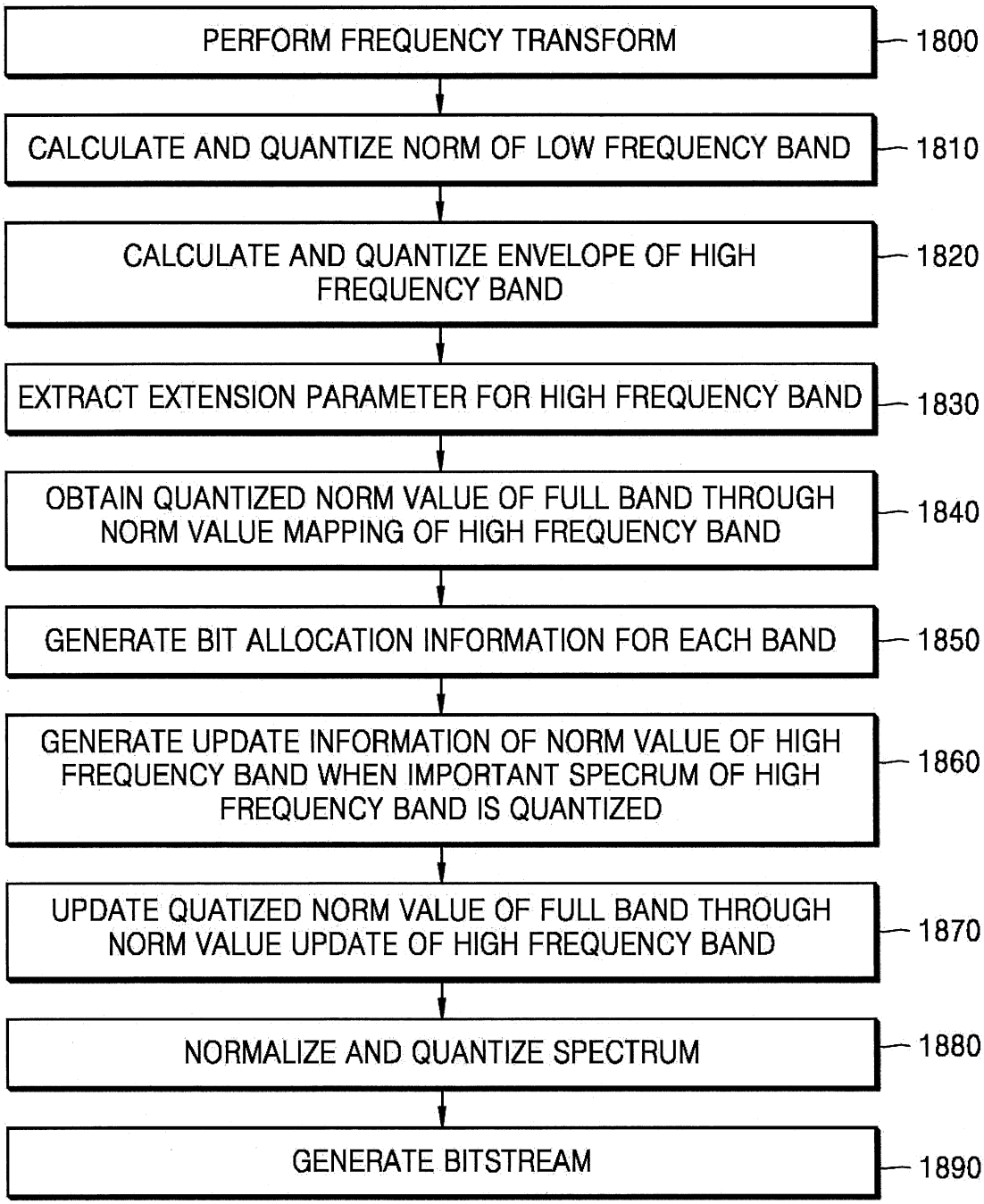
PERFORM FREQUENCY TRANSFORM
1800
CALCULATE AND QUANTIZE NORM OF LOW FREQUENCY BAND
1810
CALCULATE AND QUANTIZE ENVELOPE OF HIGH FREQUENCY BAND
1820
EXTRACT EXTENSION PARAMETER FOR HIGH FREQUENCY BAND
1830
OBTAIN QUANTIZED NORM VALUE OF FULL BAND THROUGH NORM VALUE MAPPING OF HIGH FREQUENCY BAND
1840
GENERATE BIT ALLOCATION INFORMATION FOR EACH BAND
1850
GENERATE UPDATE INFORMATION OF NORM VALUE OF HIGH FREQUENCY BAND WHEN IMPORTANT SPECRUM OF HIGH FREQUENCY BAND IS QUANTIZED
1860
UPDATE QUATIZED NORM VALUE OF FULL BAND THROUGH NORM VALUE UPDATE OF HIGH FREQUENCY BAND
1870
NORMALIZE AND QUANTIZE SPECTRUM
1880
GENERATE BITSTREAM
1890

FIG. 19

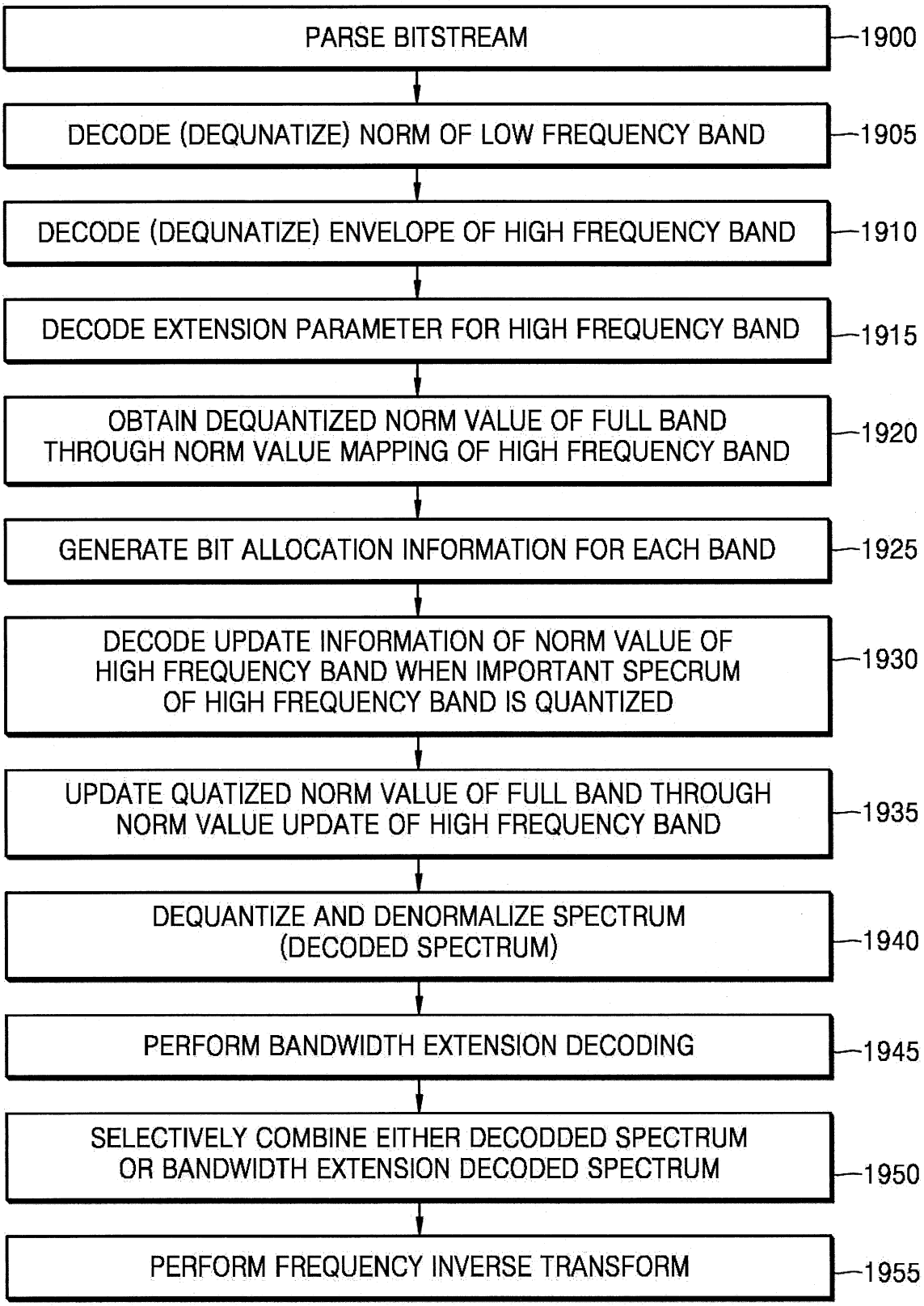
PARSE BITSTREAM
1900
DECODE (DEQUNATIZE) NORM OF LOW FREQUENCY BAND
1905
DECODE (DEQUNATIZE) ENVELOPE OF HIGH FREQUENCY BAND
1910
DECODE EXTENSION PARAMETER FOR HIGH FREQUENCY BAND
1915
OBTAIN DEQUANTIZED NORM VALUE OF FULL BAND THROUGH NORM VALUE MAPPING OF HIGH FREQUENCY BAND
1920
GENERATE BIT ALLOCATION INFORMATION FOR EACH BAND
1925
DECODE UPDATE INFORMATION OF NORM VALUE OF HIGH FREQUENCY BAND WHEN IMPORTANT SPECRUM OF HIGH FREQUENCY BAND IS QUANTIZED
1930
UPDATE QUATIZED NORM VALUE OF FULL BAND THROUGH NORM VALUE UPDATE OF HIGH FREQUENCY BAND
1935
DEQUANTIZE AND DENORMALIZE SPECTRUM (DECODED SPECTRUM)
1940
PERFORM BANDWIDTH EXTENSION DECODING
1945
SELECTIVELY COMBINE EITHER DECODDED SPECTRUM OR BANDWIDTH EXTENSION DECODED SPECTRUM
1950
PERFORM FREQUENCY INVERSE TRANSFORM
1955