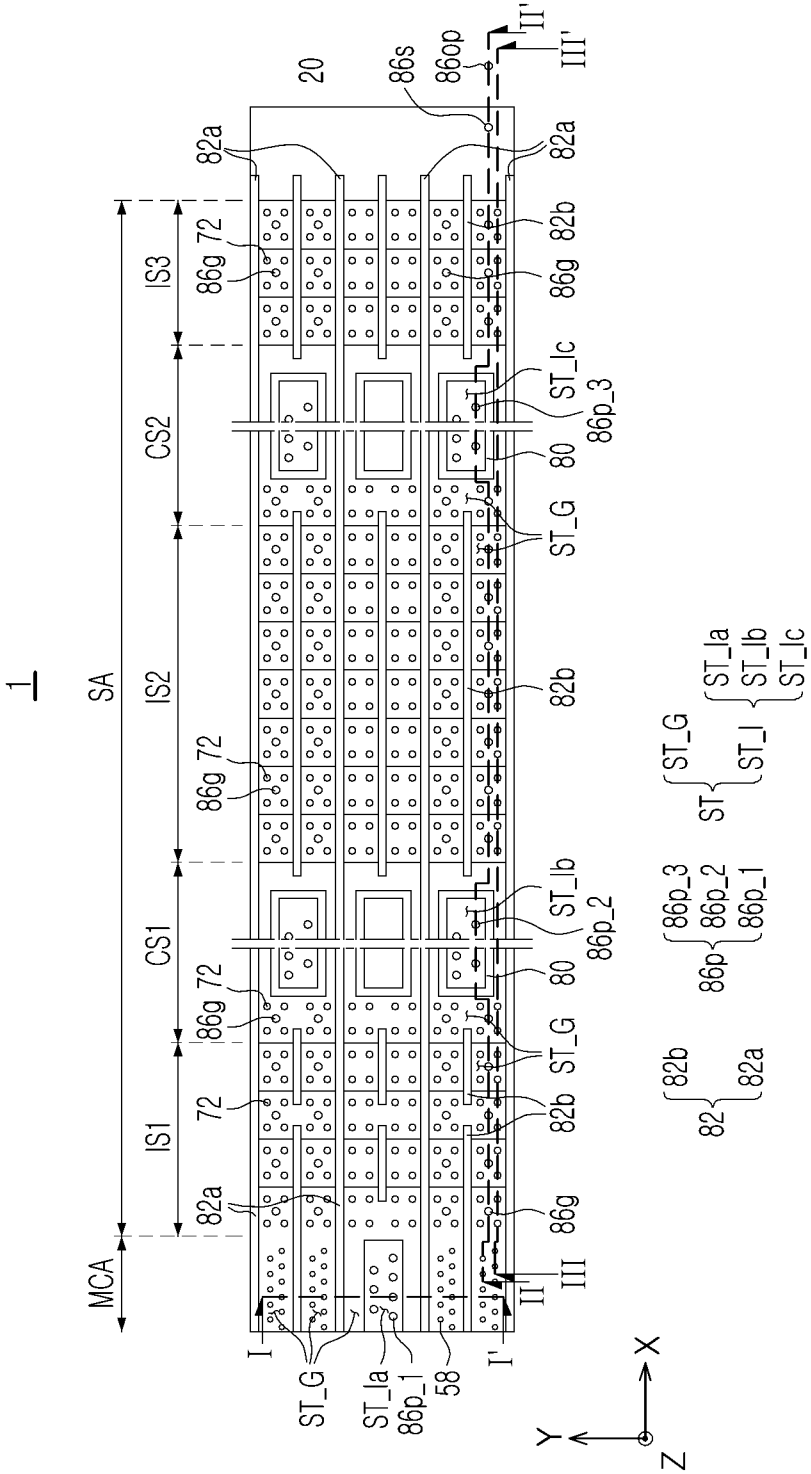
1
SA
MCA
IS1
CS1
IS2
CS2
IS3
20
86s
86op
82a
82b
86g
72
80
ST_G
ST_Ic
86p_3
ST_Ib
86p_2
ST_Ia
86p_1
58
I
I'
II
II'
III
III'
X
Y
Z
82
86p
ST
ST_I

FIG. 1

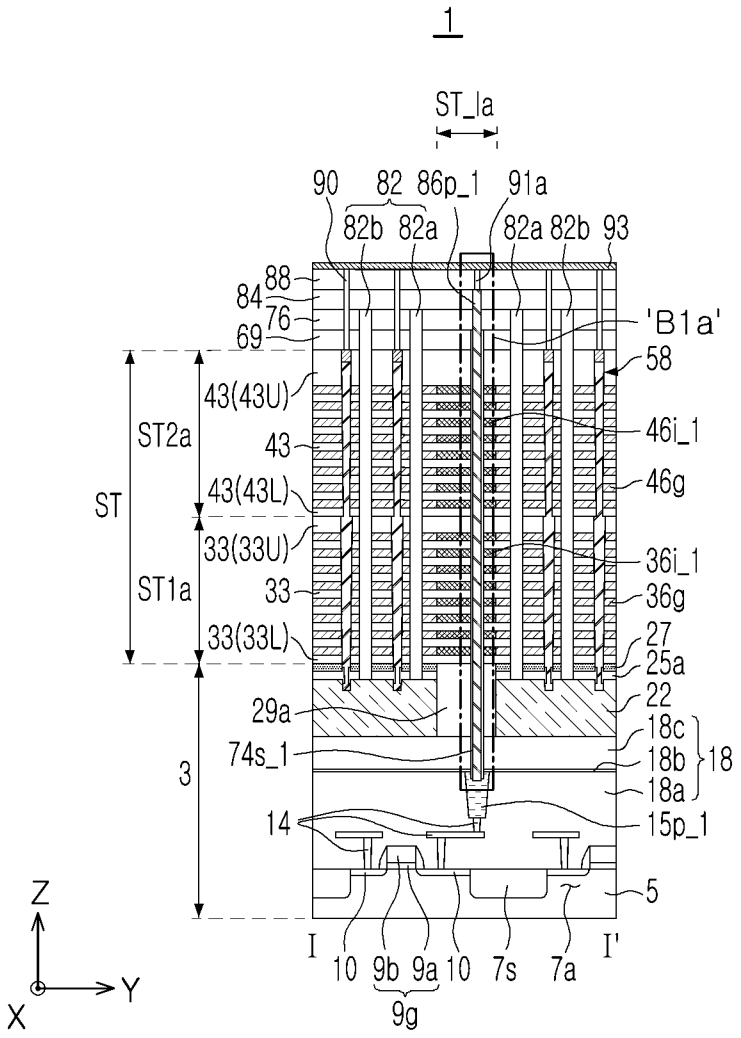

48 { 46 { 46g; 46i { 46i_3, 46i_2, 46i_1 } }; 36 { 36g; 36i { 36i_2, 36i_1 } } }

ST { ST_G { 46g, 36g }; ST_I { 46i, 36i } }

PC { 12 { 10, 9g }; 14 }

15p { 15p_4, 15p_3, 15p_2, 15p_1 }

FIG. 2A

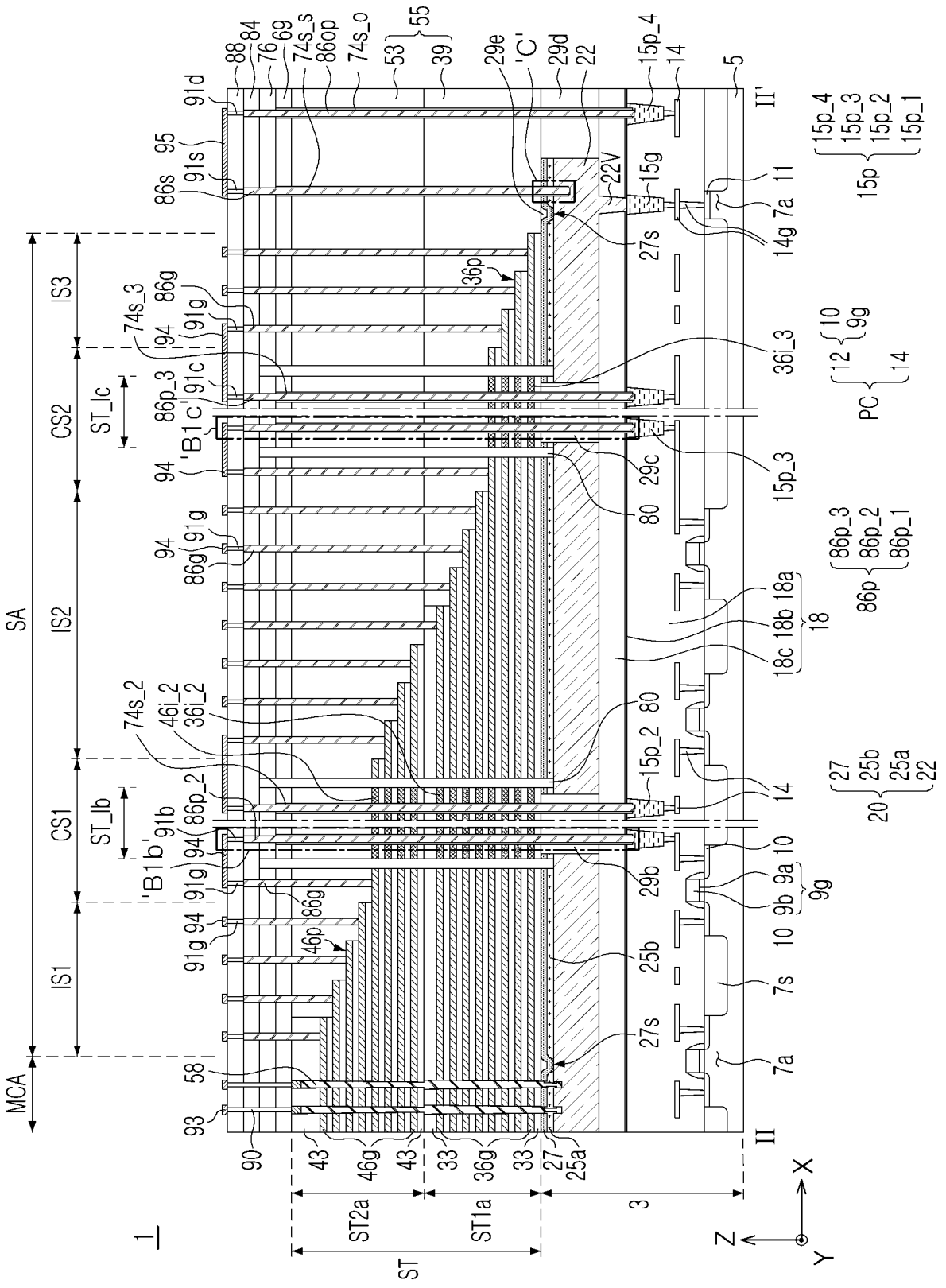
1
SA
MCA
IS1
IS2
IS3
CS1
CS2
ST_Ib
ST_Ic
ST
ST1a
ST2a
3
II
II'
'B1b'
'B1c'
'C'
PC
X
Y
Z

FIG. 2B

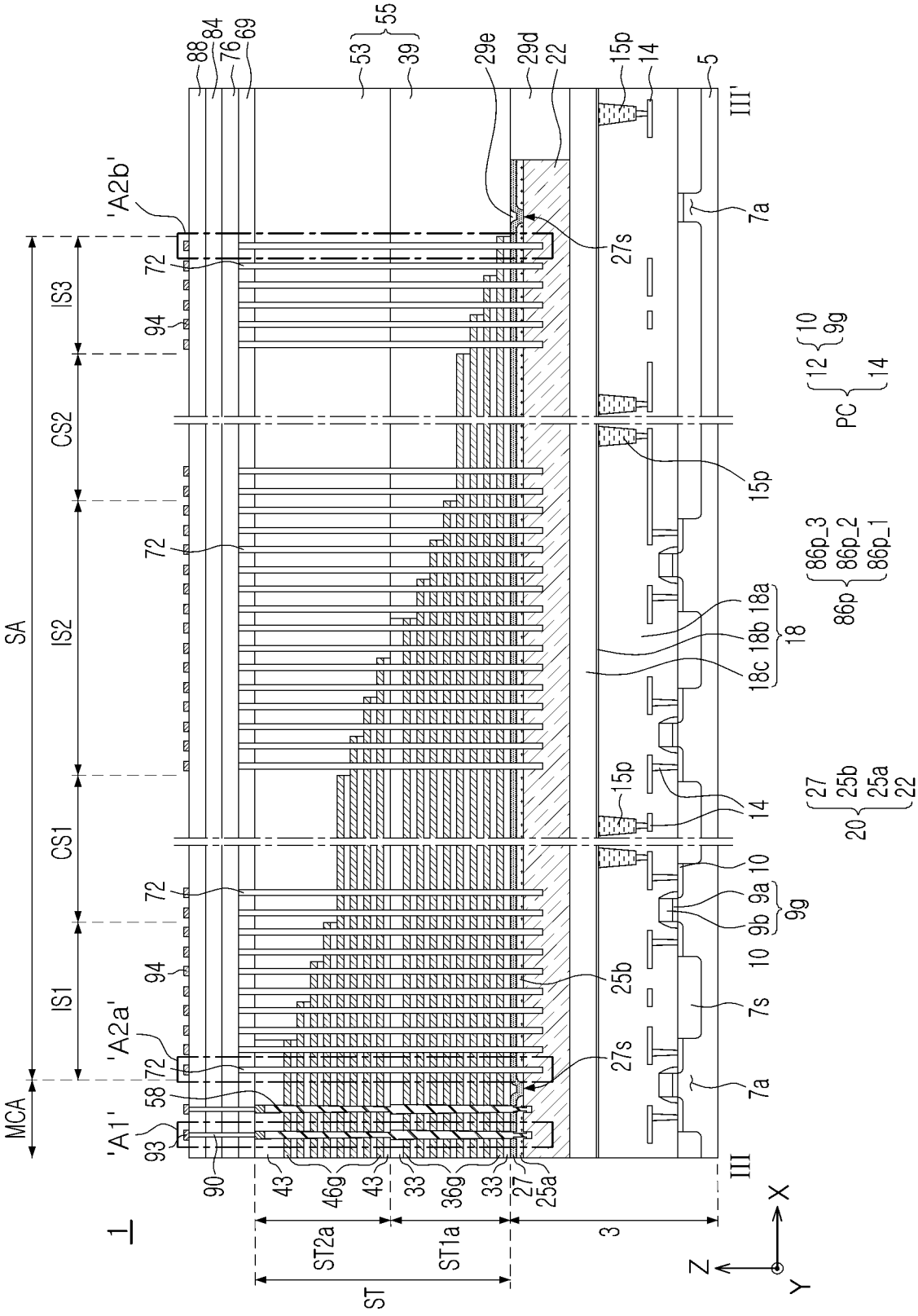
1
SA
MCA
IS1
IS2
IS3
CS1
CS2
'A1'
'A2a'
'A2b'
ST
ST1a
ST2a
3
III
III'
X
Y
Z
PC
86p
86p_1
86p_2
86p_3
18
18a
18b
18c
20
22
25a
25b
27
27s
29d
29e
33
36g
43
46g
53
55
58
69
72
76
84
88
90
93
94
9a
9b
9g
10
12
14
15p
5
7a
7s
39

FIG. 2C

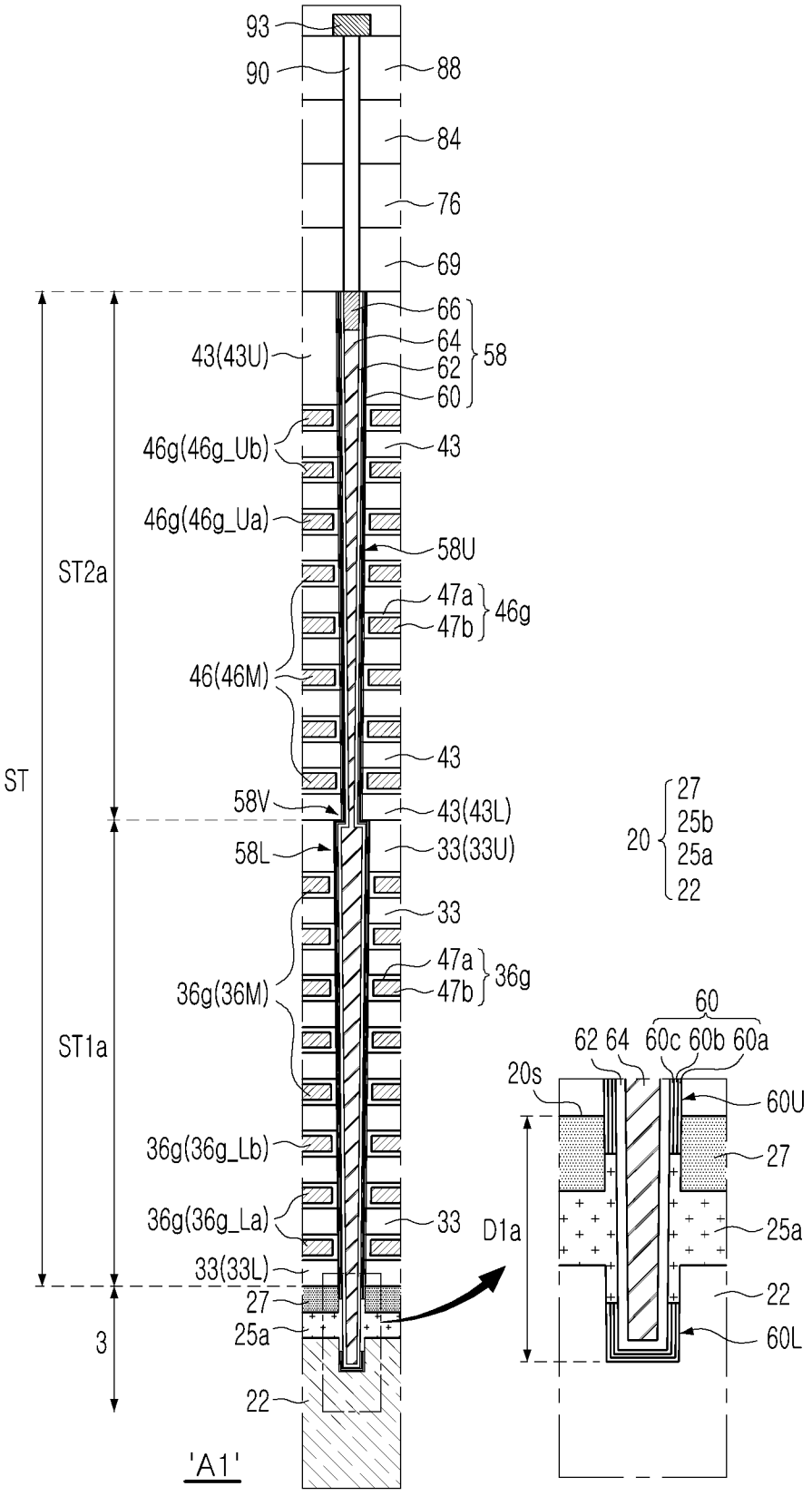
93
90
88
84
76
69
66
64
62
60
58
43(43U)
46g(46g_Ub)
43
46g(46g_Ua)
58U
47a
47b
46g
46(46M)
43
58V
43(43L)
58L
33(33U)
33
47a
47b
36g
36g(36M)
36g(36g_Lb)
36g(36g_La)
33
33(33L)
27
25a
22
ST
ST2a
ST1a
3
'A1'
20
27
25b
25a
22
60
62 64
60c 60b 60a
20s
60U
27
25a
22
60L
D1a

FIG. 3A

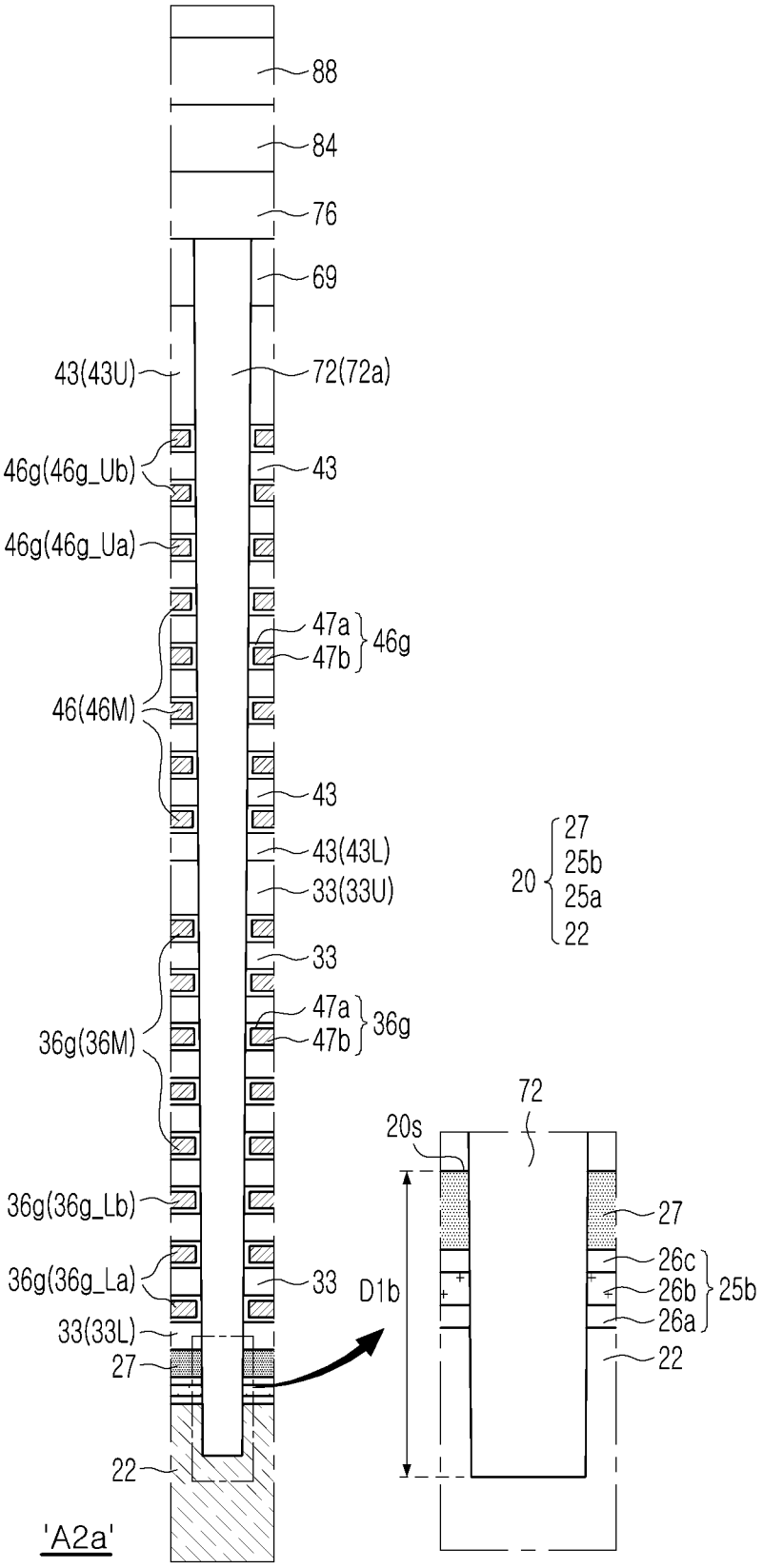
88
84
76
69
43(43U)
72(72a)
46g(46g_Ub)
43
46g(46g_Ua)
47a
47b
46g
46(46M)
43
43(43L)
33(33U)
33
47a
47b
36g
36g(36M)
36g(36g_Lb)
36g(36g_La)
33
33(33L)
27
22
'A2a'
20
27
25b
25a
22
72
20s
D1b
27
26c
26b
26a
25b
22

FIG. 3B

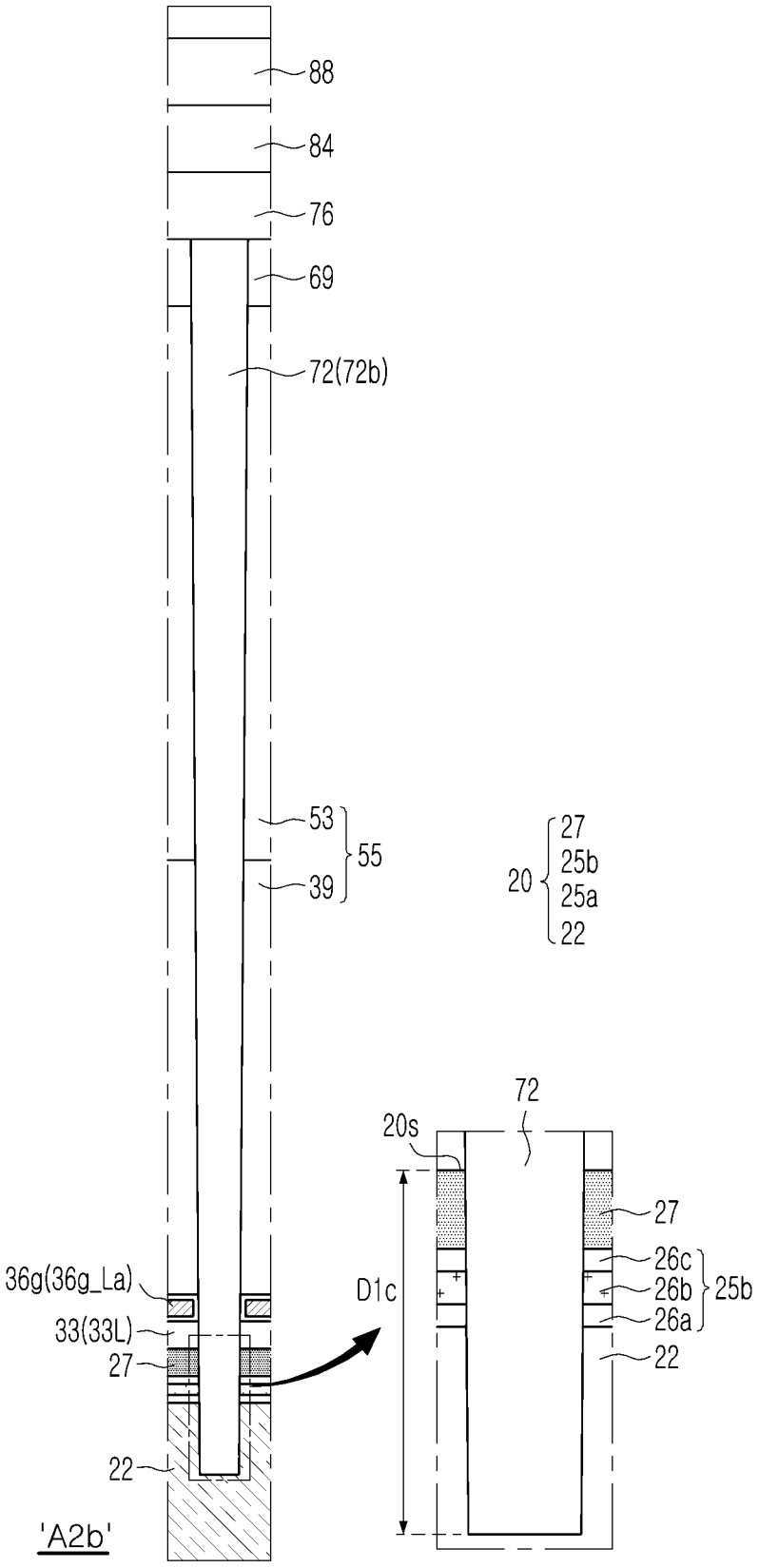
88
84
76
69
72(72b)
53
55
39
20
27
25b
25a
22
72
20s
27
26c
26b
25b
26a
22
D1c
36g(36g_La)
33(33L)
27
22
'A2b'

FIG. 3C

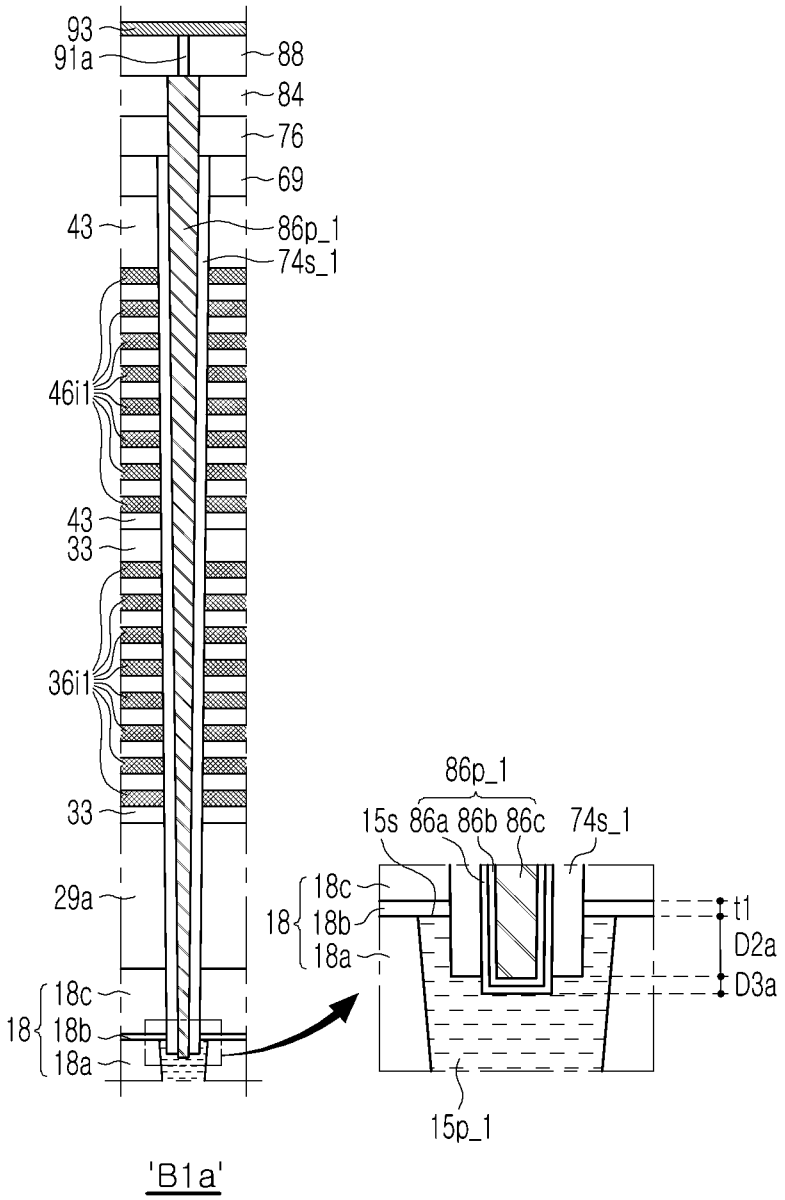
93
91a
88
84
76
69
43
86p_1
74s_1
46i1
43
33
36i1
33
29a
18c
18
18b
18a
'B1a'
86p_1
15s
86a
86b
86c
74s_1
18c
18
18b
18a
t1
D2a
D3a
15p_1

FIG. 4A

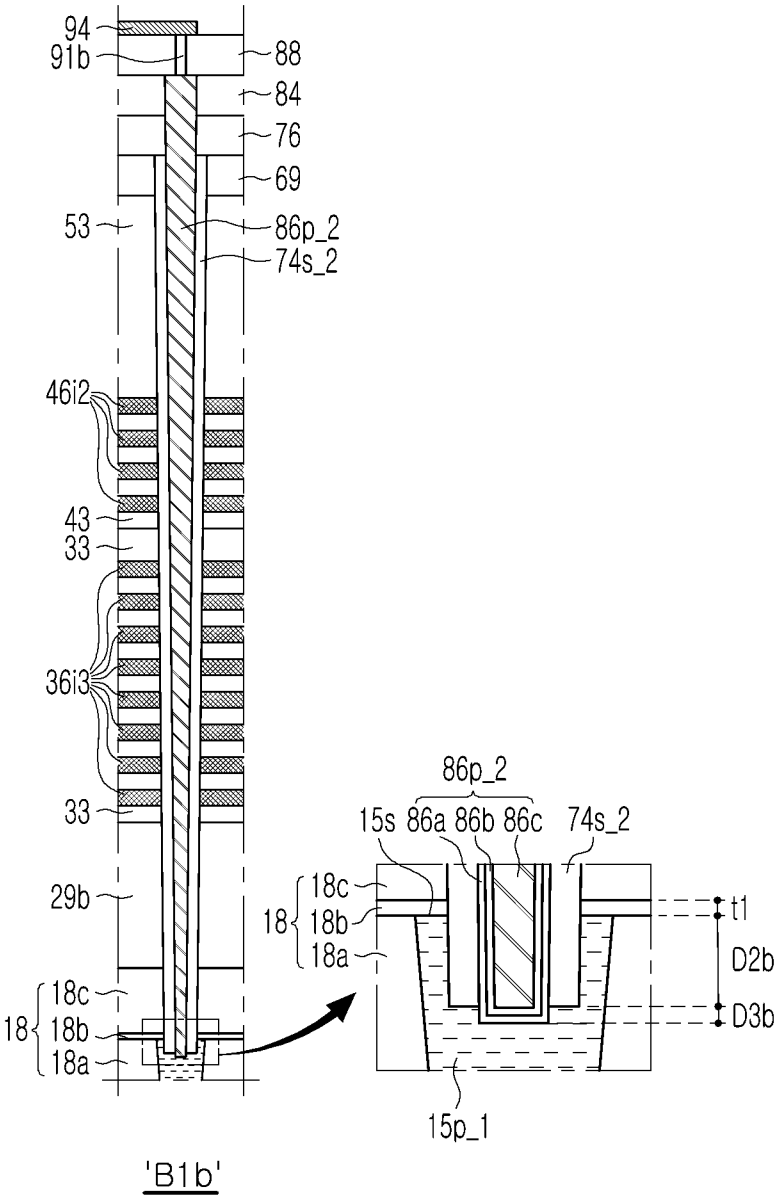
94
91b
88
84
76
69
53
86p_2
74s_2
46i2
43
33
36i3
33
29b
18
18c
18b
18a
'B1b'
86p_2
15s
86a
86b
86c
74s_2
18
18c
18b
18a
t1
D2b
D3b
15p_1

FIG. 4B

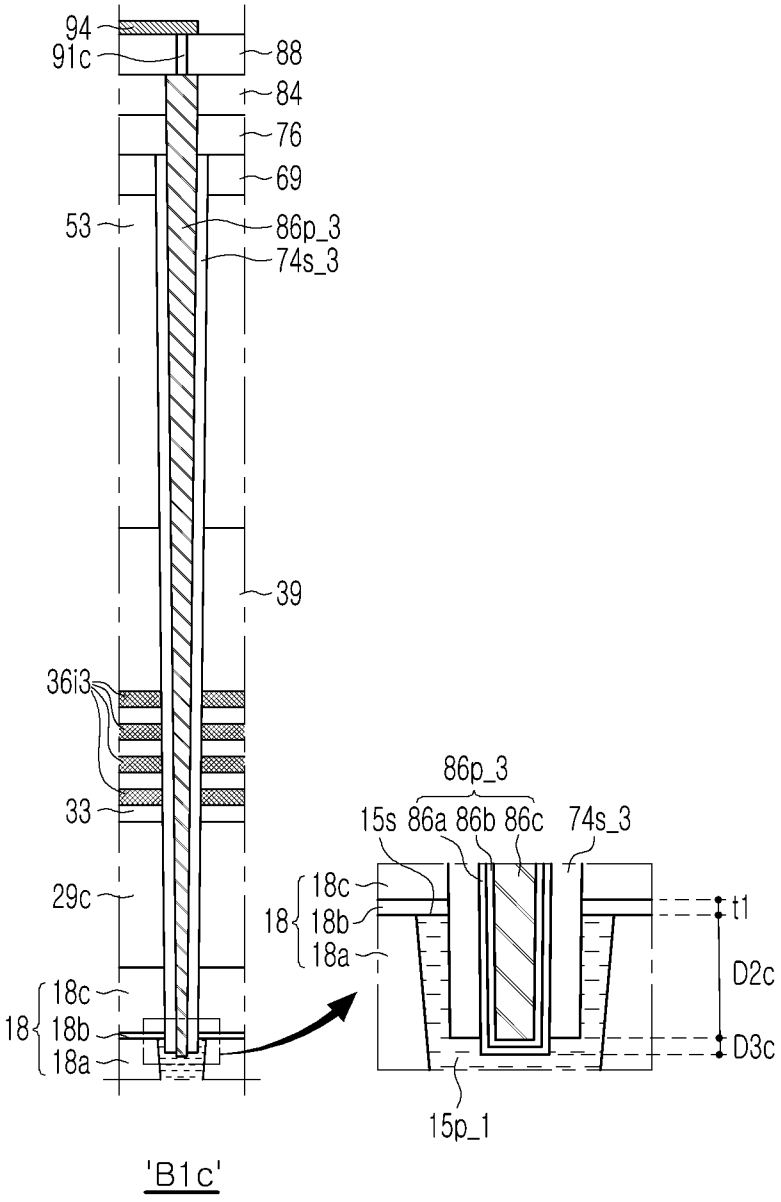
94
91c
88
84
76
69
53
86p_3
74s_3
39
36i3
33
29c
18c
18
18b
18a
'B1c'
86p_3
15s
86a
86b
86c
74s_3
18c
18
18b
18a
t1
D2c
D3c
15p_1

FIG. 4C

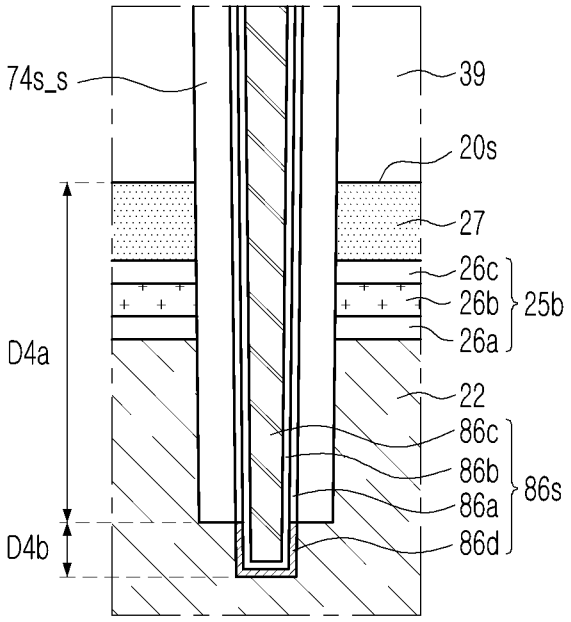
74s_s
39
20s
27
26c
26b
25b
26a
D4a
22
86c
86b
86s
86a
D4b
86d
'C'
20
27
25b
25a
22

FIG. 5

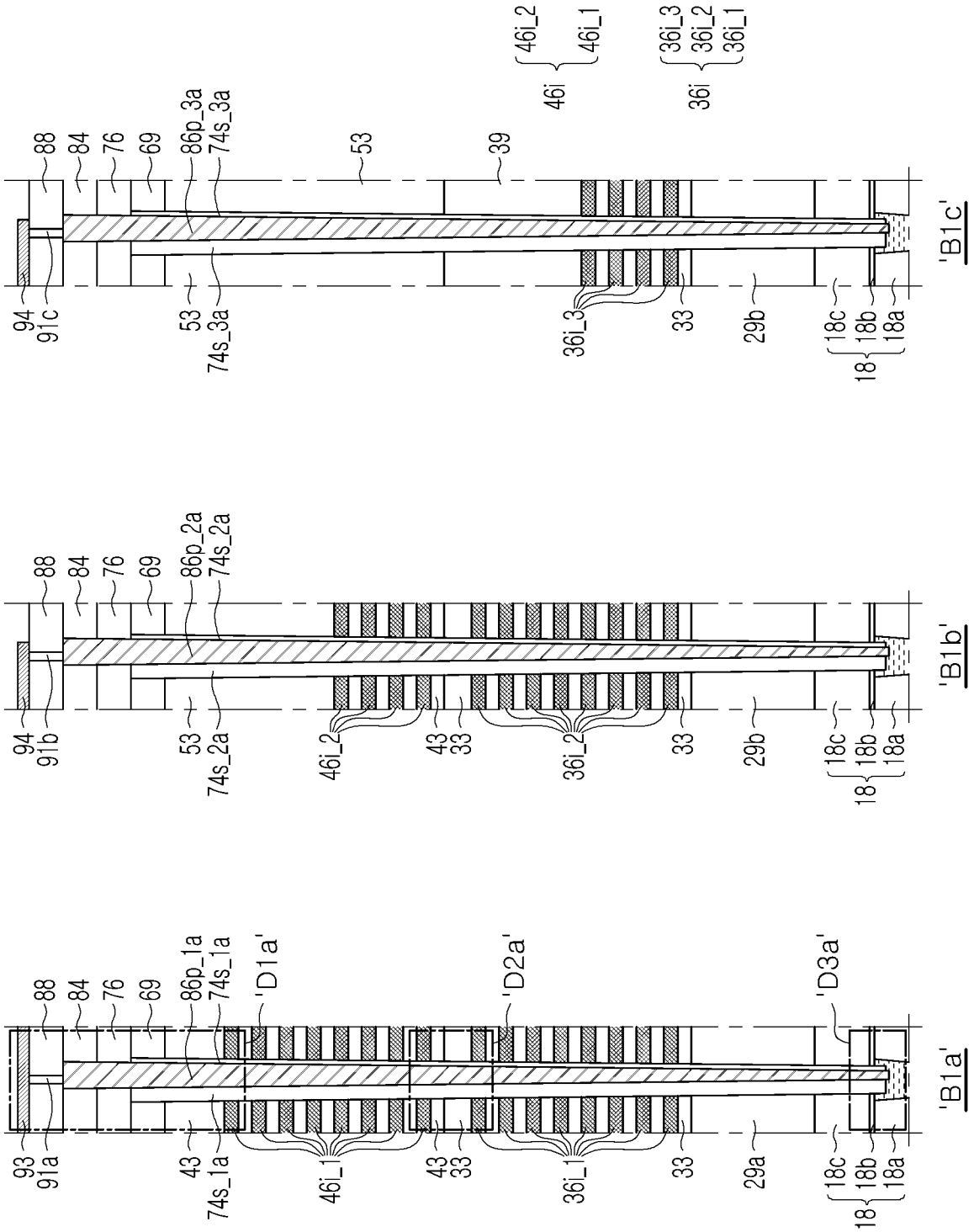
'B1a'
'B1b'
'B1c'
'D1a'
'D2a'
'D3a'
93
91a
94
91b
91c
88
84
76
69
86p_1a
74s_1a
86p_2a
74s_2a
86p_3a
74s_3a
43
53
39
46i
46i_2
46i_1
36i
36i_3
36i_2
36i_1
18
18c
18b
18a
29a
29b
33

FIG. 6A

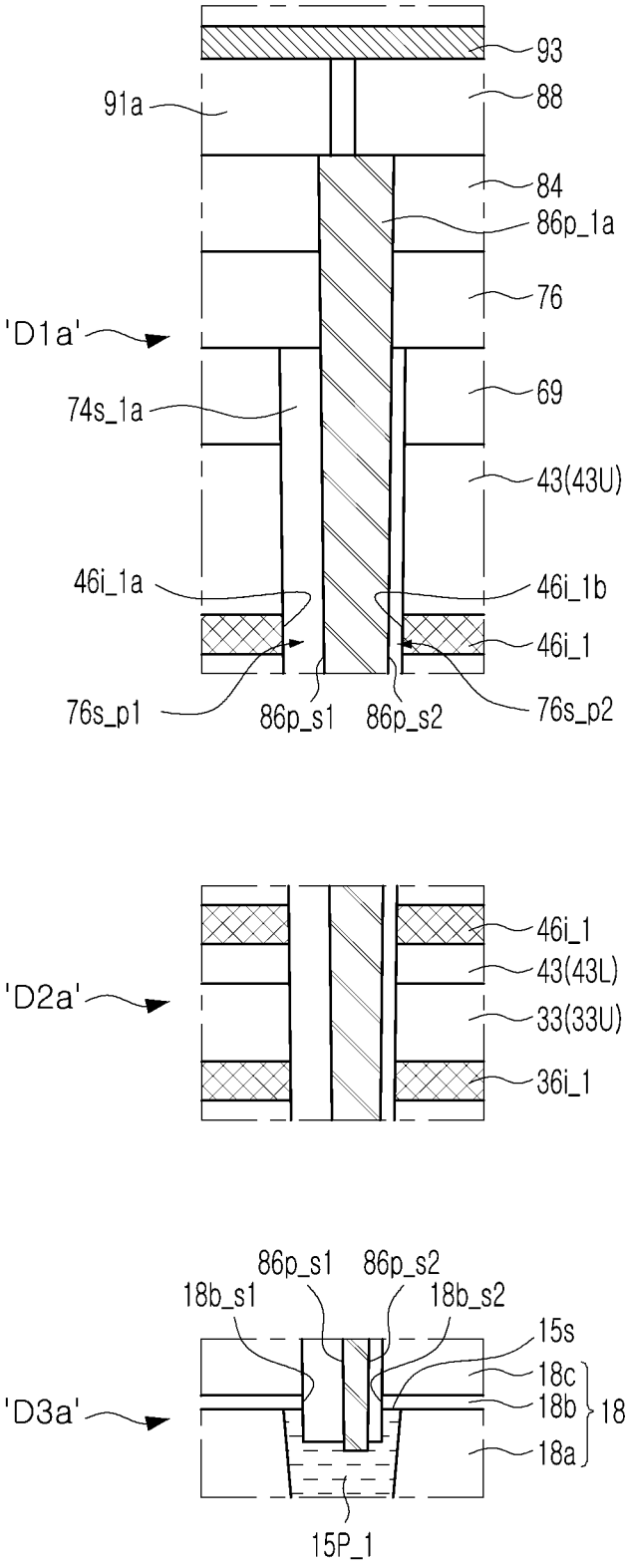
93
91a
88
84
86p_1a
76
'D1a'
69
74s_1a
43(43U)
46i_1a
46i_1b
46i_1
76s_p1
86p_s1
86p_s2
76s_p2
46i_1
'D2a'
43(43L)
33(33U)
36i_1
86p_s1
86p_s2
18b_s1
18b_s2
15s
18c
'D3a'
18b
18
18a
15P_1

FIG. 6B

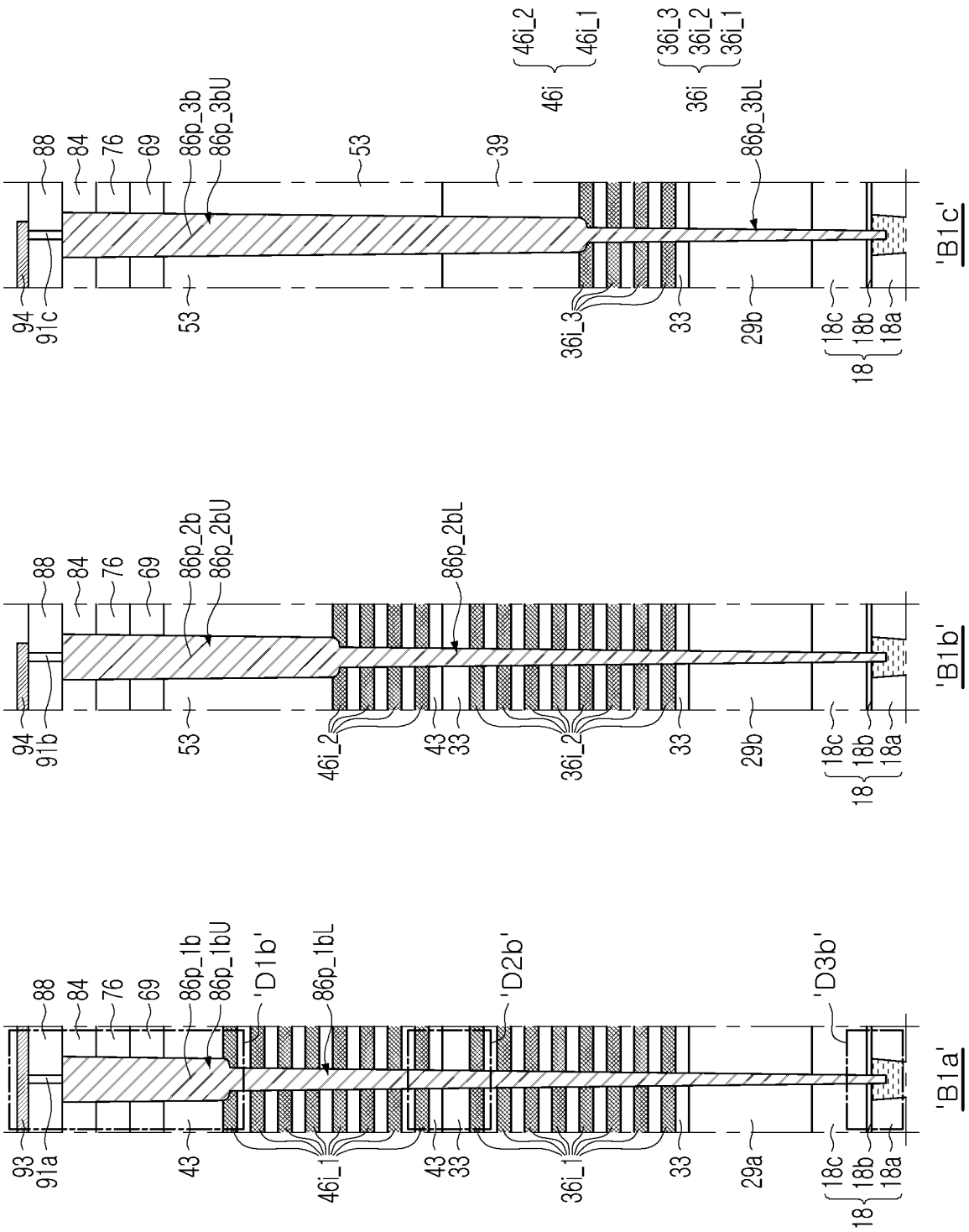
'B1a'
'B1b'
'B1c'
88
84
76
69
86p_1b
86p_1bU
'D1b'
86p_1bL
'D2b'
'D3b'
86p_2b
86p_2bU
86p_2bL
86p_3b
86p_3bU
86p_3bL
53
39
46i
46i_2
46i_1
36i
36i_3
36i_2
36i_1
93
91a
94
91b
91c
43
33
29a
29b
18
18c
18b
18a

FIG. 7A

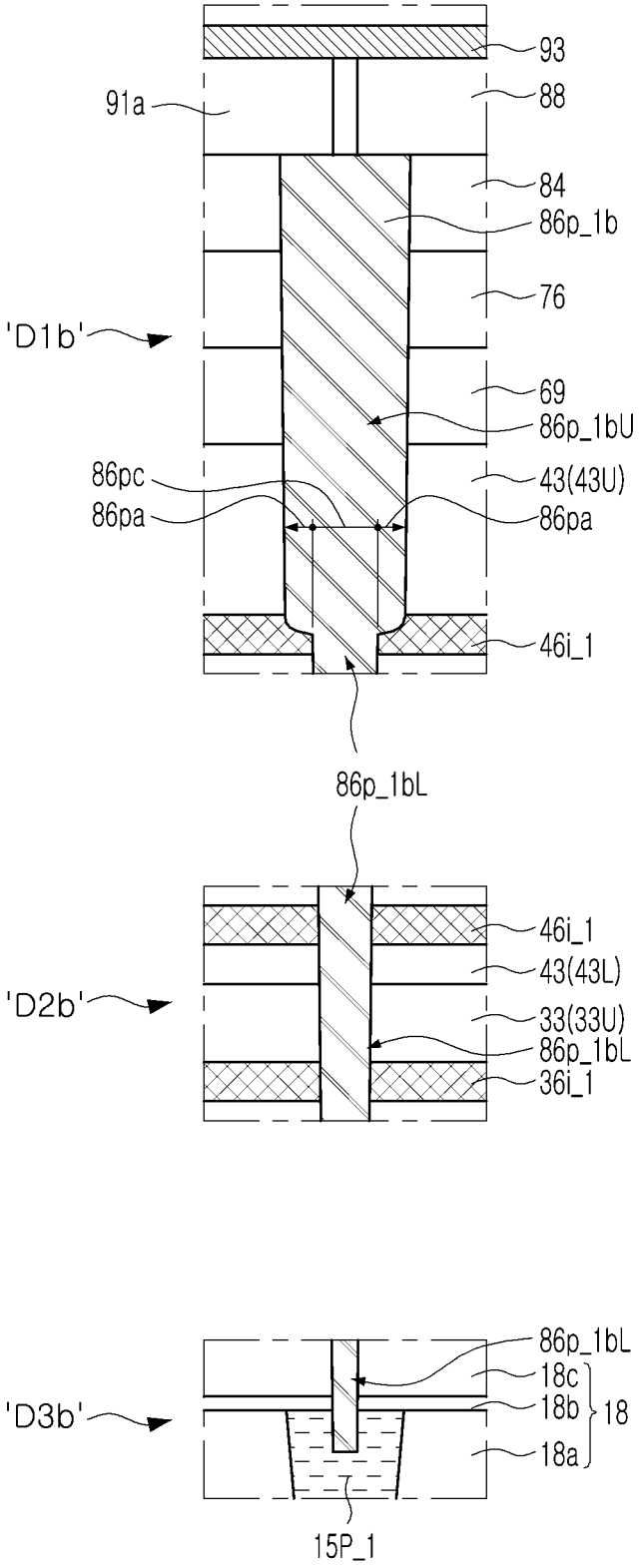
93
91a
88
84
86p_1b
76
'D1b'
69
86p_1bU
86pc
43(43U)
86pa
86pa
46i_1
86p_1bL
46i_1
43(43L)
'D2b'
33(33U)
86p_1bL
36i_1
86p_1bL
18c
18b
18
'D3b'
18a
15P_1

FIG. 7B

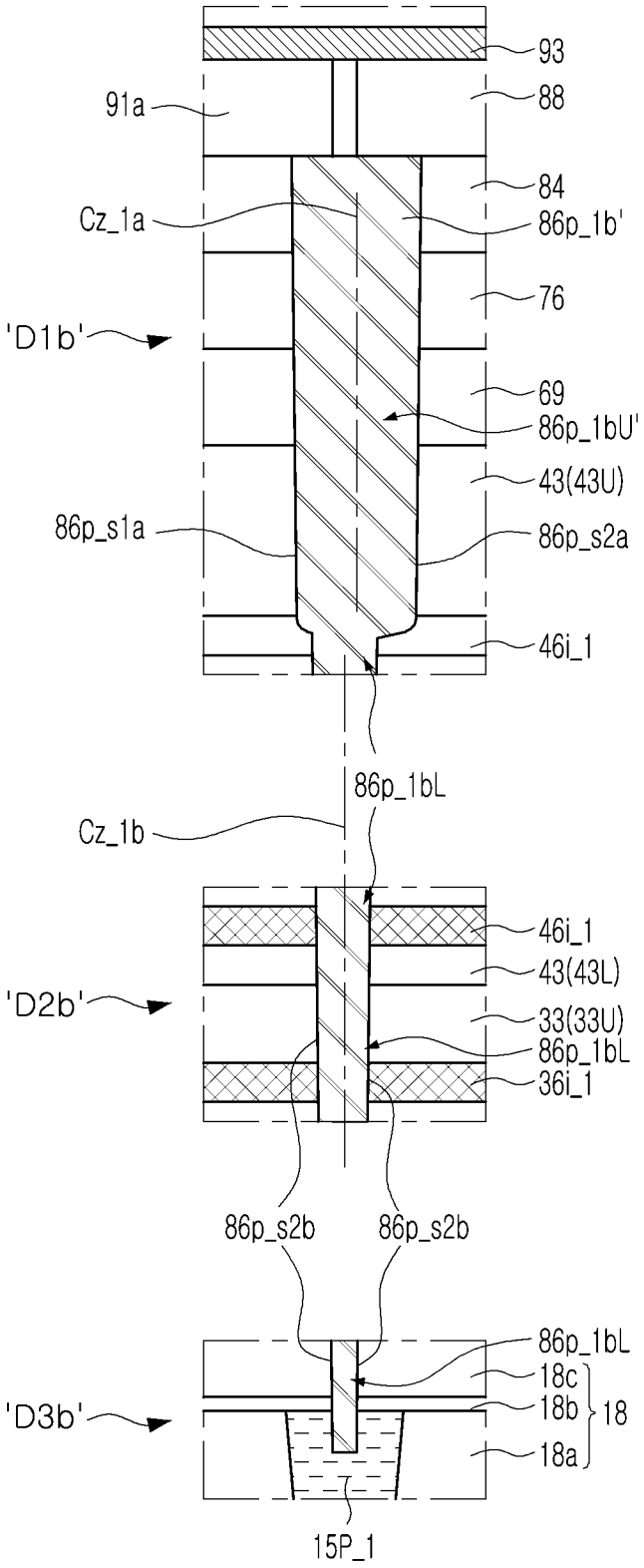
93
91a
88
84
Cz_1a
86p_1b'
76
'D1b'
69
86p_1bU'
43(43U)
86p_s1a
86p_s2a
46i_1
86p_1bL
Cz_1b
46i_1
43(43L)
'D2b'
33(33U)
86p_1bL
36i_1
86p_s2b
86p_s2b
86p_1bL
18c
18b
18
'D3b'
18a
15P_1

FIG. 8

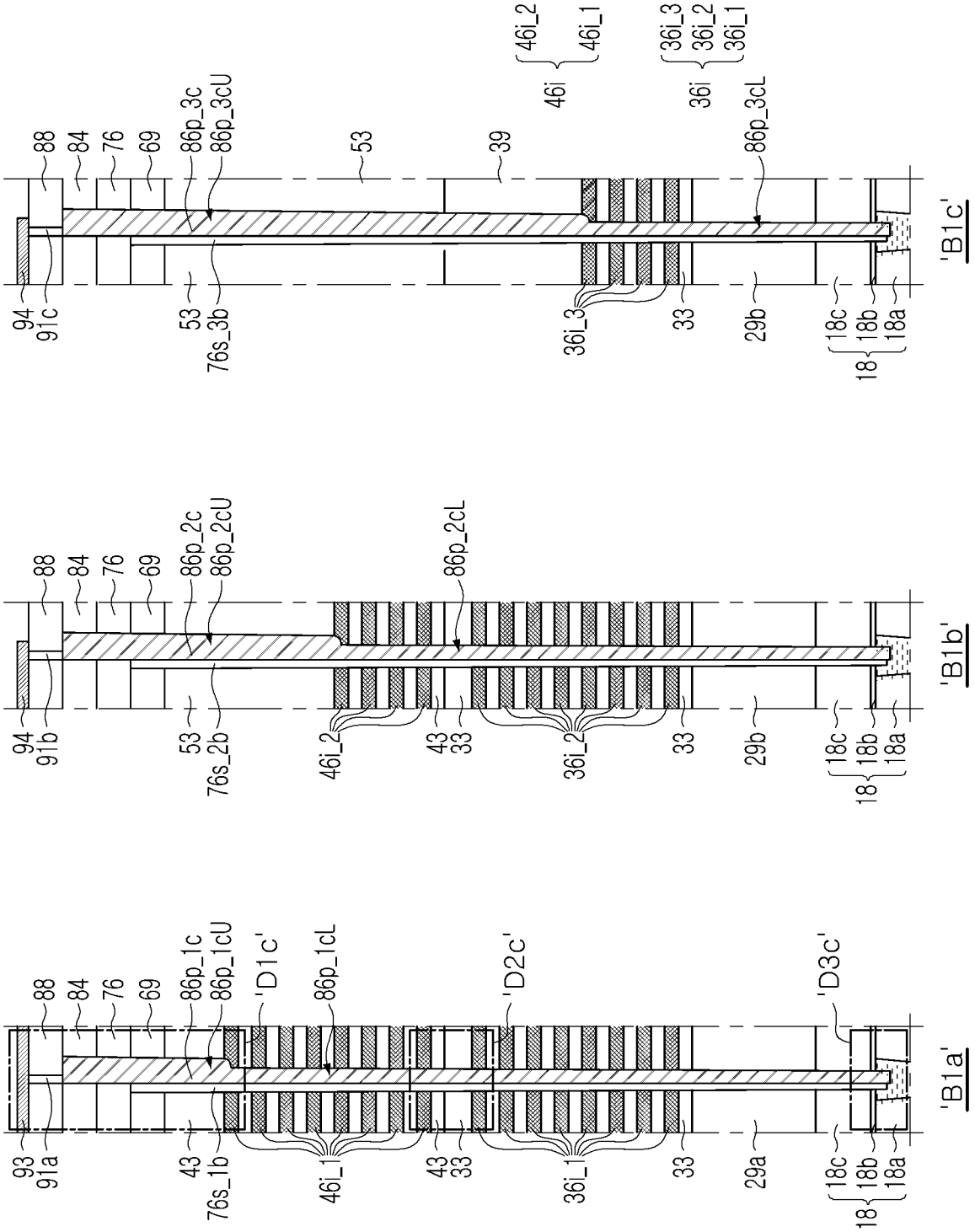
'B1a'
'B1b'
'B1c'
93
91a
94
91b
94
91c
88
84
76
69
86p_1c
86p_1cU
86p_2c
86p_2cU
86p_3c
86p_3cU
'D1c'
86p_1cL
86p_2cL
'D2c'
'D3c'
86p_3cL
43
76s_1b
53
76s_2b
53
76s_3b
53
39
46i_1
43
33
46i_2
46i
36i_1
36i_2
36i_3
36i
33
29a
29b
18c
18b
18a
18

FIG. 9A

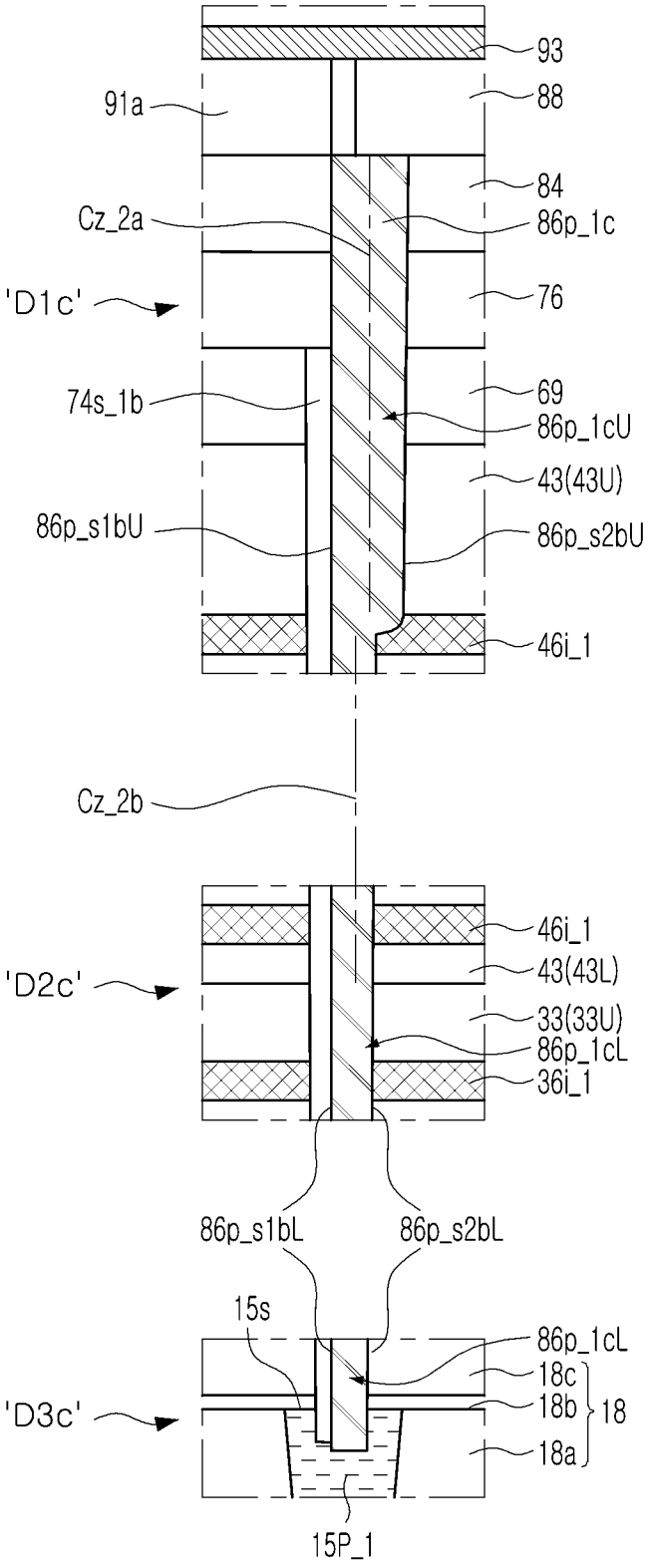
93
91a
88
84
Cz_2a
86p_1c
'D1c'
76
74s_1b
69
86p_1cU
43(43U)
86p_s1bU
86p_s2bU
46i_1
Cz_2b
46i_1
'D2c'
43(43L)
33(33U)
86p_1cL
36i_1
86p_s1bL
86p_s2bL
15s
86p_1cL
18c
'D3c'
18b
18
18a
15P_1

FIG. 9B

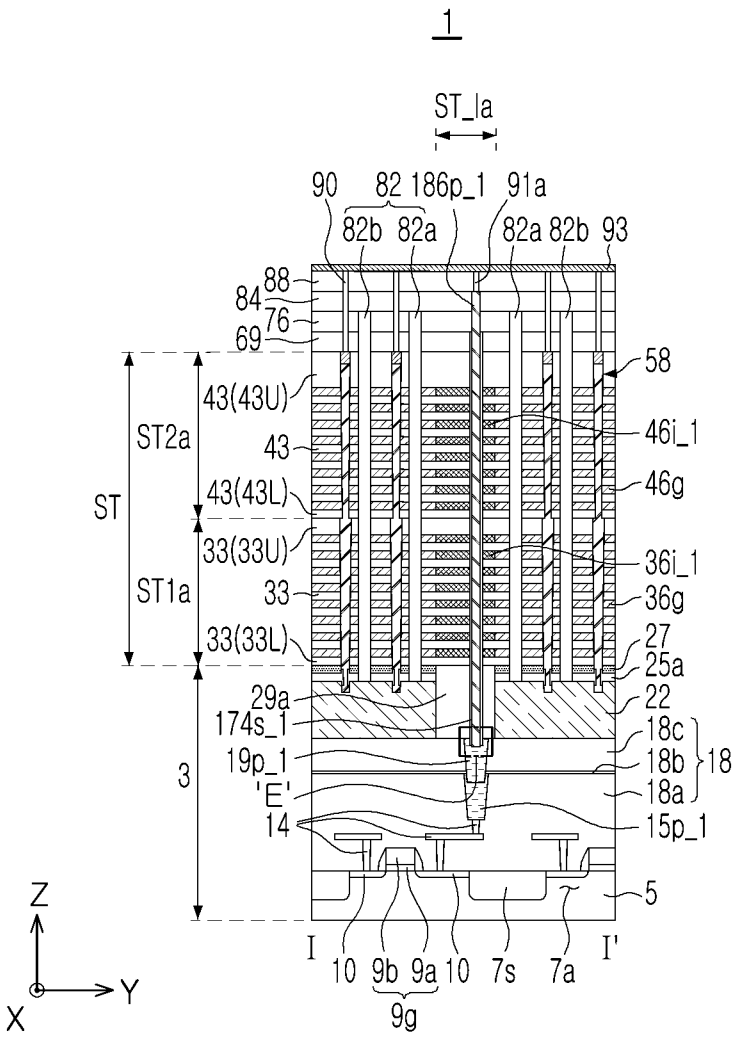

48 { 46 { 46g; 46i { 46i_2; 46i_1 } } 36 { 36g; 36i { 36i_3; 36i_2; 36i_1 } }

ST { ST_G { 46g; 36g } ST_I { 46i; 36i }

PC { 12 { 10; 9g } 14 }

15p { 15p_4; 15p_3; 15p_2; 15p_1 }

FIG. 10A

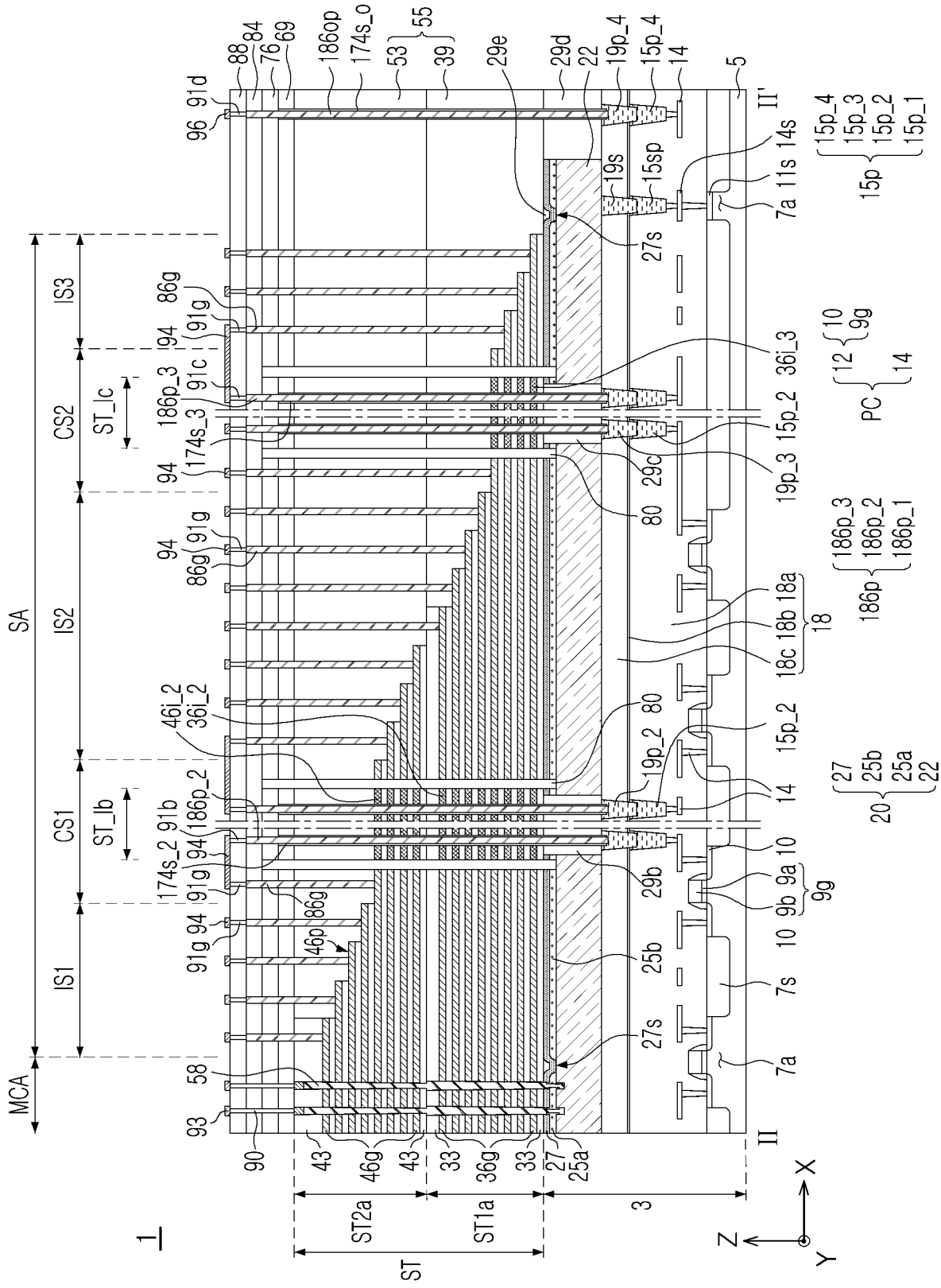
1
SA
MCA
IS1
IS2
IS3
CS1
CS2
ST_Ib
ST_Ic
ST
ST1a
ST2a
3
II
II'
X
Y
Z
PC
15p
15p_1
15p_2
15p_3
15p_4
186p
186p_1
186p_2
186p_3
18
18a
18b
18c
20
22
25a
25b
27
27s
29a
29b
29c
29d
29e
33
36g
36i_2
36i_3
39
43
46g
46i_2
46p
53
55
58
69
76
80
84
88
90
91b
91c
91d
91g
93
94
96
174s_2
174s_3
186op
186p_2
186p_3
19p_2
19p_3
19p_4
19s
15sp
14
14s
11s
7a
7s
9a
9b
9g
10
12
5

FIG. 10B

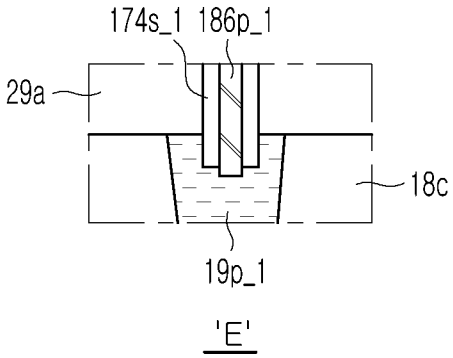

FIG. 10C

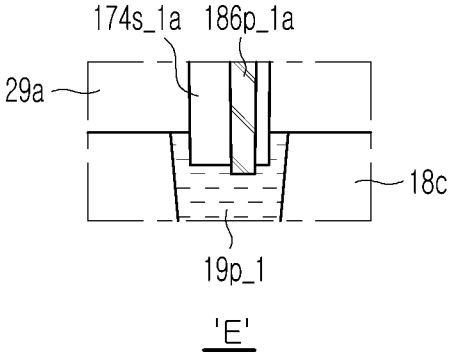

FIG. 11A

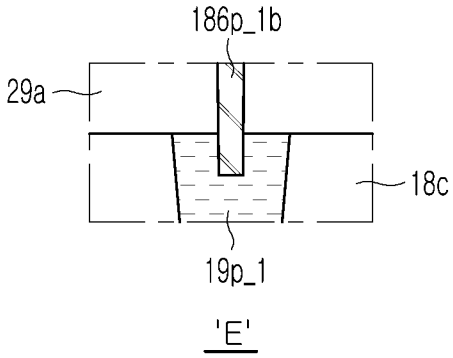

FIG. 11B

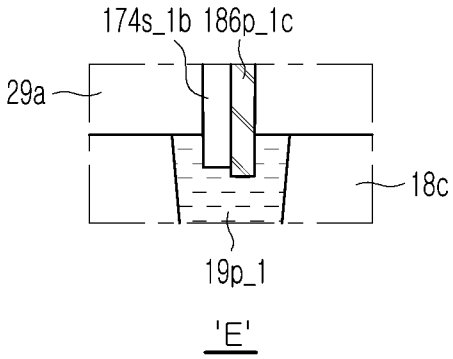

FIG. 11C

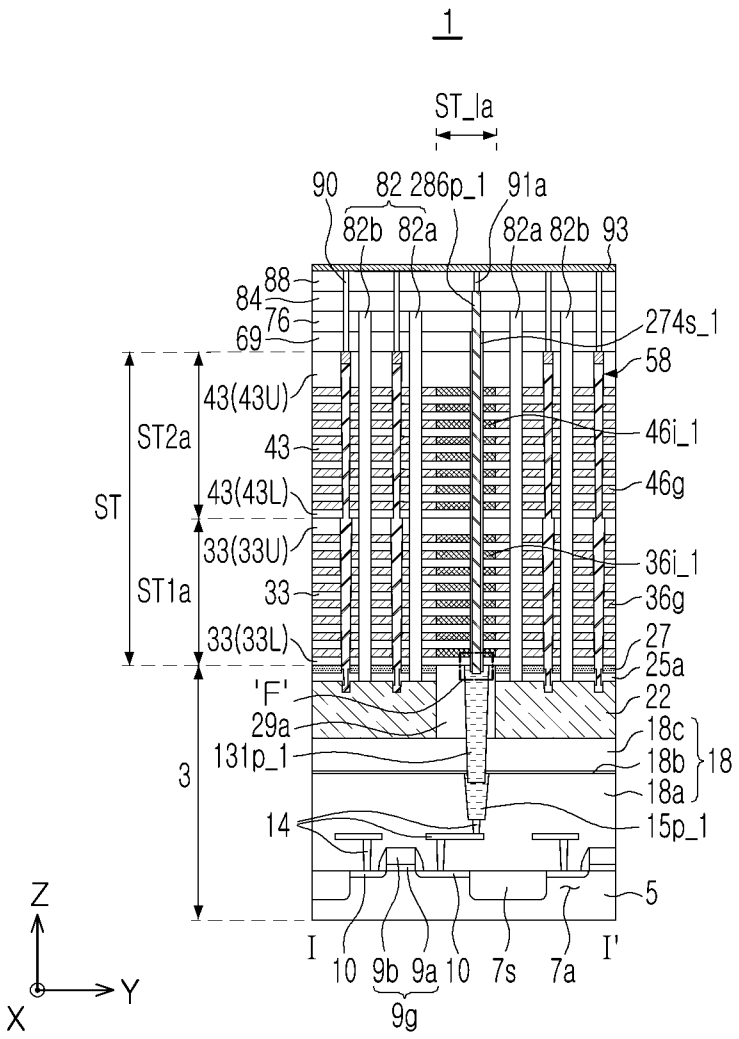

48 { 46 { 46g; 46i { 46i_2; 46i_1 } } 36 { 36g; 36i { 36i_3; 36i_2; 36i_1 } }

ST { ST_G { 46g; 36g } ST_I { 46i; 36i }

PC { 12 { 10; 9g } 14

15p { 15p_4; 15p_3; 15p_2; 15p_1 }

FIG. 12A

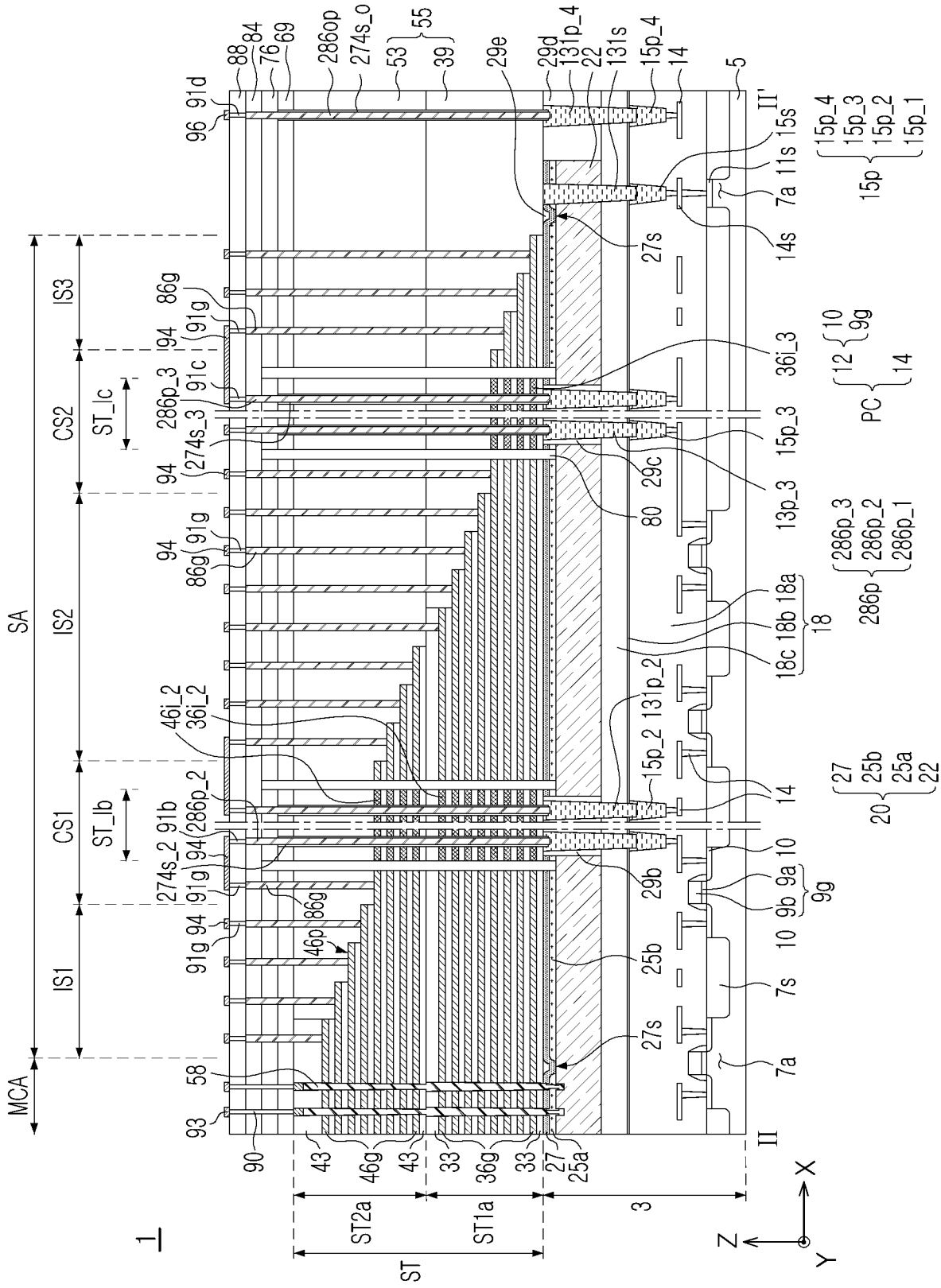
1
SA
MCA
IS1
IS2
IS3
CS1
CS2
ST_lb
ST_lc
ST
ST1a
ST2a
3
II
II'
X
Y
Z
PC
15p
15p_1
15p_2
15p_3
15p_4
286p
286p_1
286p_2
286p_3
274s_o
274s_2
274s_3
131p_2
131p_4
131s
55
53
39
29e
29d
29b
29c
27s
25b
25a
27
25a
46p
46i_2
36i_2
36i_3
36g
46g
43
33
58
93
90
94
91g
91b
91c
91d
86g
80
13p_3
15p_3
15p_2
15p_4
14s
11s
15s
7a
7s
10
9a
9b
9g
18
18a
18b
18c
20
22
12
14
5

FIG. 12B

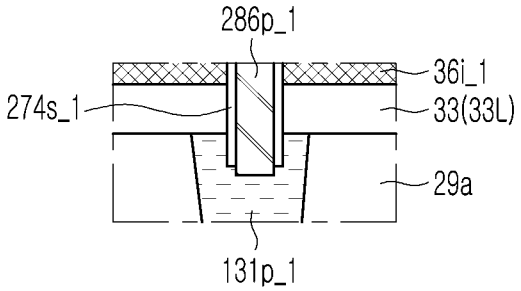

FIG. 13

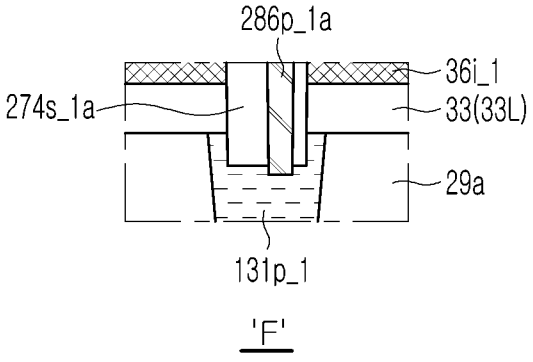

FIG. 14A

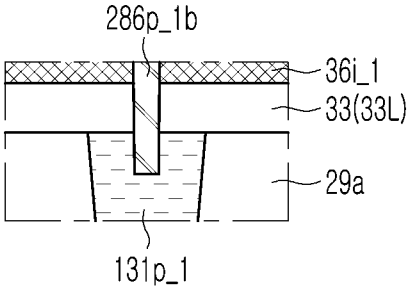

FIG. 14B

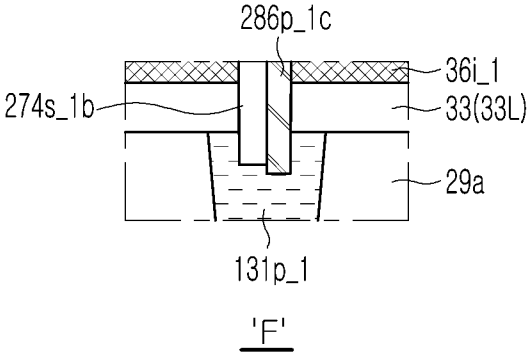

FIG. 14C

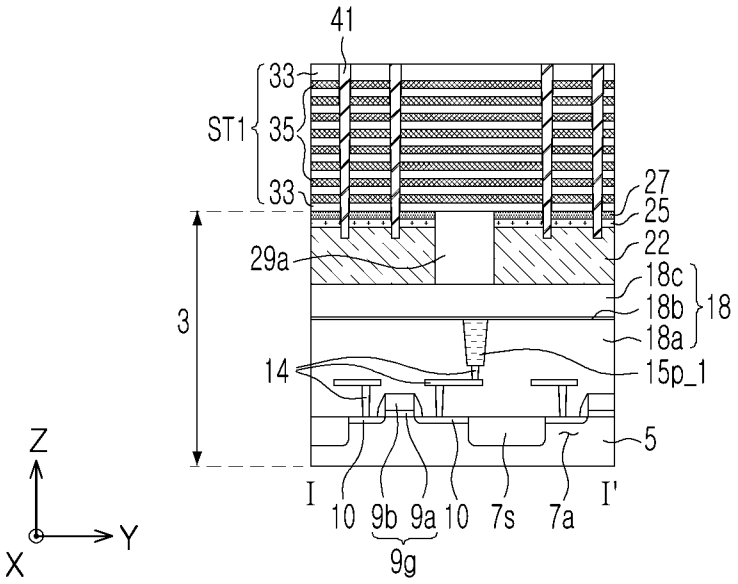
41
33
ST1
35
33
27
25
22
29a
18c
18b
18
18a
3
14
15p_1
5
Z
Y
X
I
I'
10
9b
9a
10
7s
7a
9g

FIG. 15A

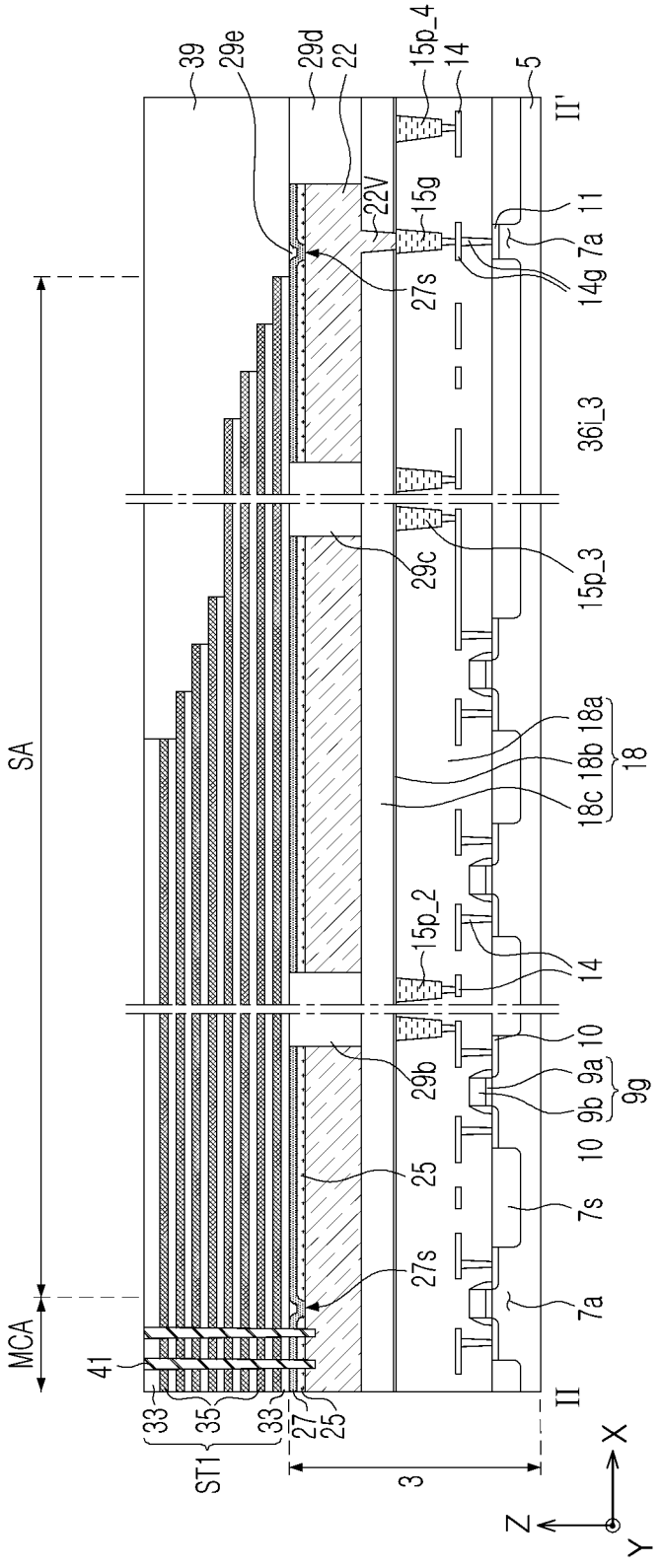
39
29e
29d
22
15p_4
14
5
II'
22V
15g
11
7a
14g
27s
36i_3
15p_3
29c
18a
18b
18c
18
15p_2
14
10
9a
9b
9g
29b
25
10
7s
27s
7a
SA
MCA
41
33
35
33
27
25
ST1
II
3
X
Z
Y

FIG. 15B

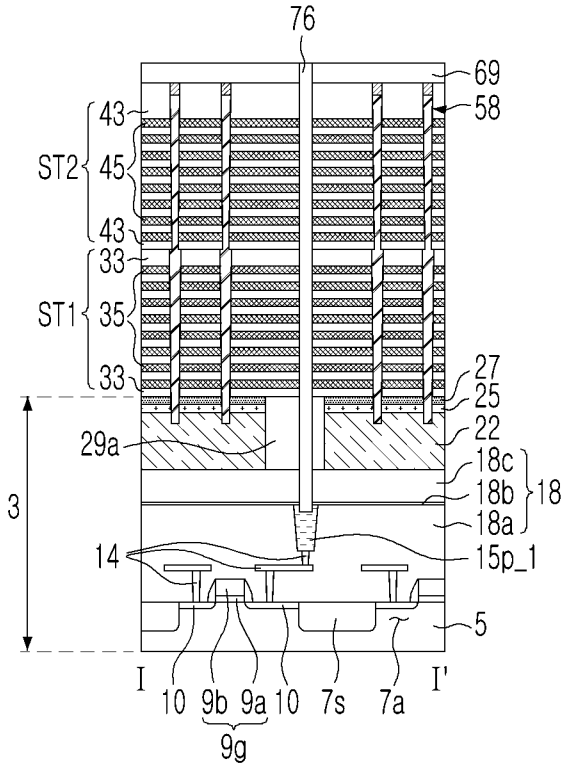
76
69
58
43
ST2
45
43
33
ST1
35
33
27
25
22
29a
18c
18b
18
18a
3
14
15p_1
5
I
10
9b
9a
10
7s
7a
I'
9g

FIG. 16A

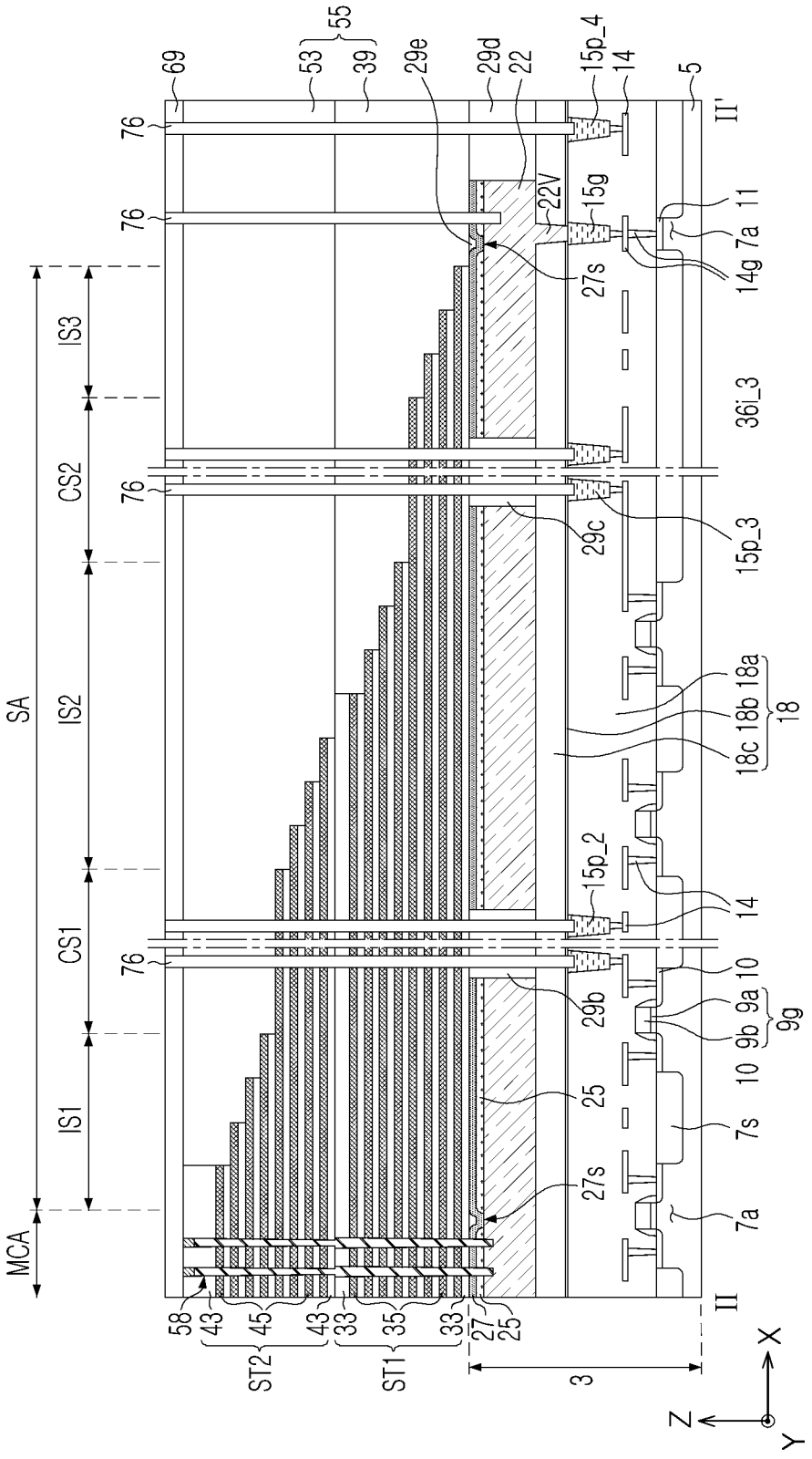

SA
MCA
IS1
CS1
IS2
CS2
IS3
ST1
ST2
II
II'
3
X
Y
Z
69
53
55
39
29e
29d
22
15p_4
14
5
76
22V
15g
11
7a
14g
27s
36i_3
29c
15p_3
18a
18b
18c
18
15p_2
10
9a
9b
9g
29b
25
7s
58
43
45
33
35
27

FIG. 16B

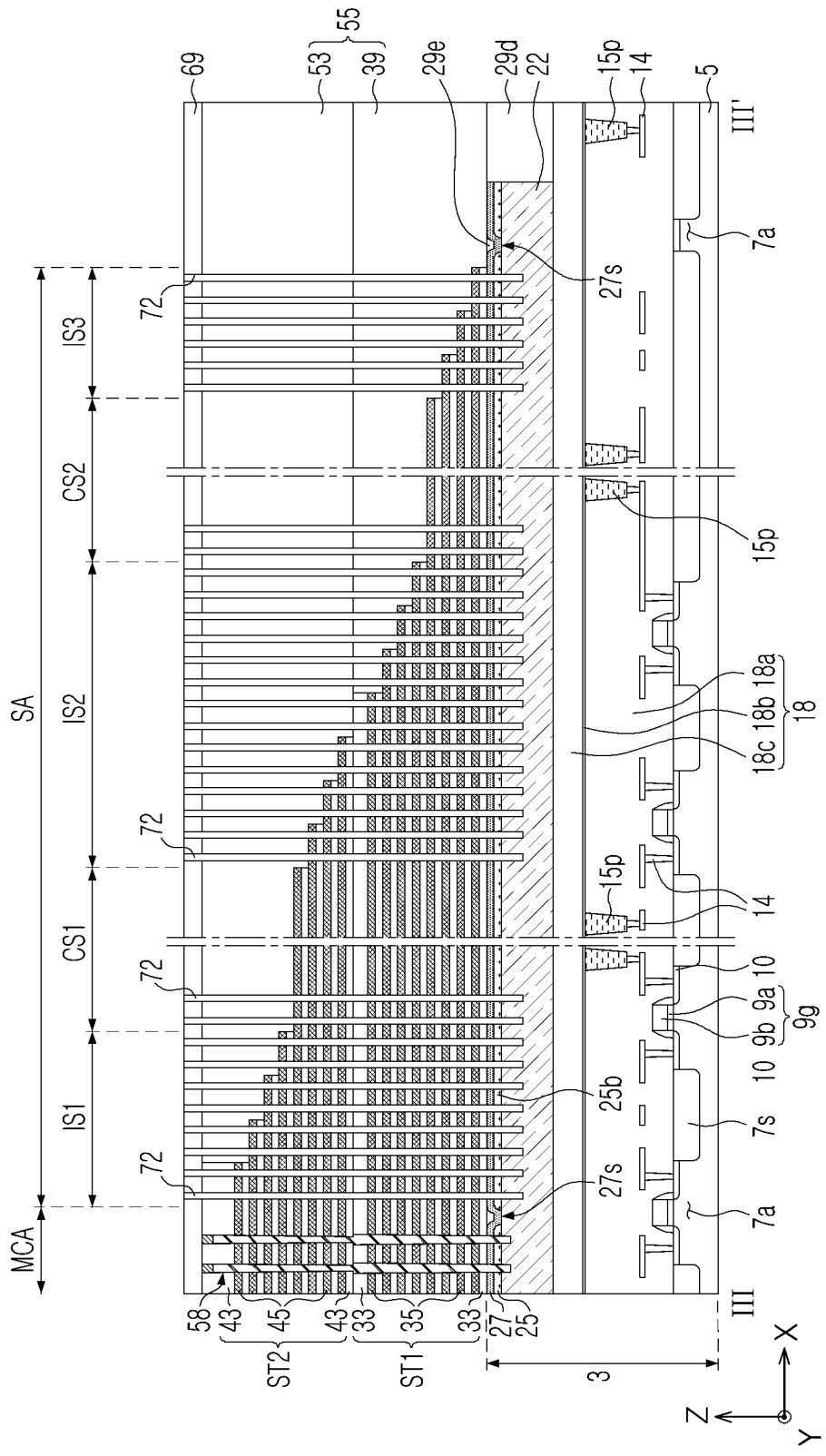
69
53
55
39
29e
29d
22
15p
14
5
III'
7a
27s
72
IS3
CS2
IS2
CS1
IS1
MCA
SA
18a
18b
18c
18
10
9a
9b
9g
25b
7s
58
43
45
33
35
27
25
ST2
ST1
3
III
X
Y
Z

FIG. 16C

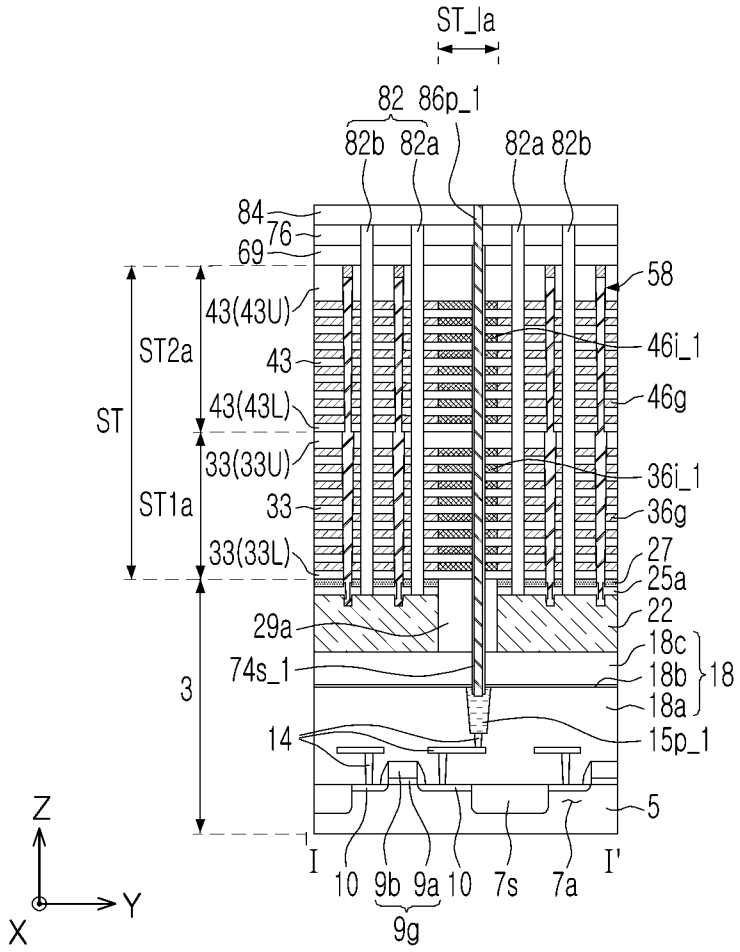
ST_la
82
86p_1
82b
82a
82a
82b
84
76
69
58
43(43U)
46i_1
ST2a
43
46g
ST
43(43L)
33(33U)
36i_1
ST1a
33
36g
33(33L)
27
25a
22
29a
18c
74s_1
18b
18
3
18a
14
15p_1
5
Z
Y
X
I
I'
10
9b
9a
10
7s
7a
9g

FIG. 17A

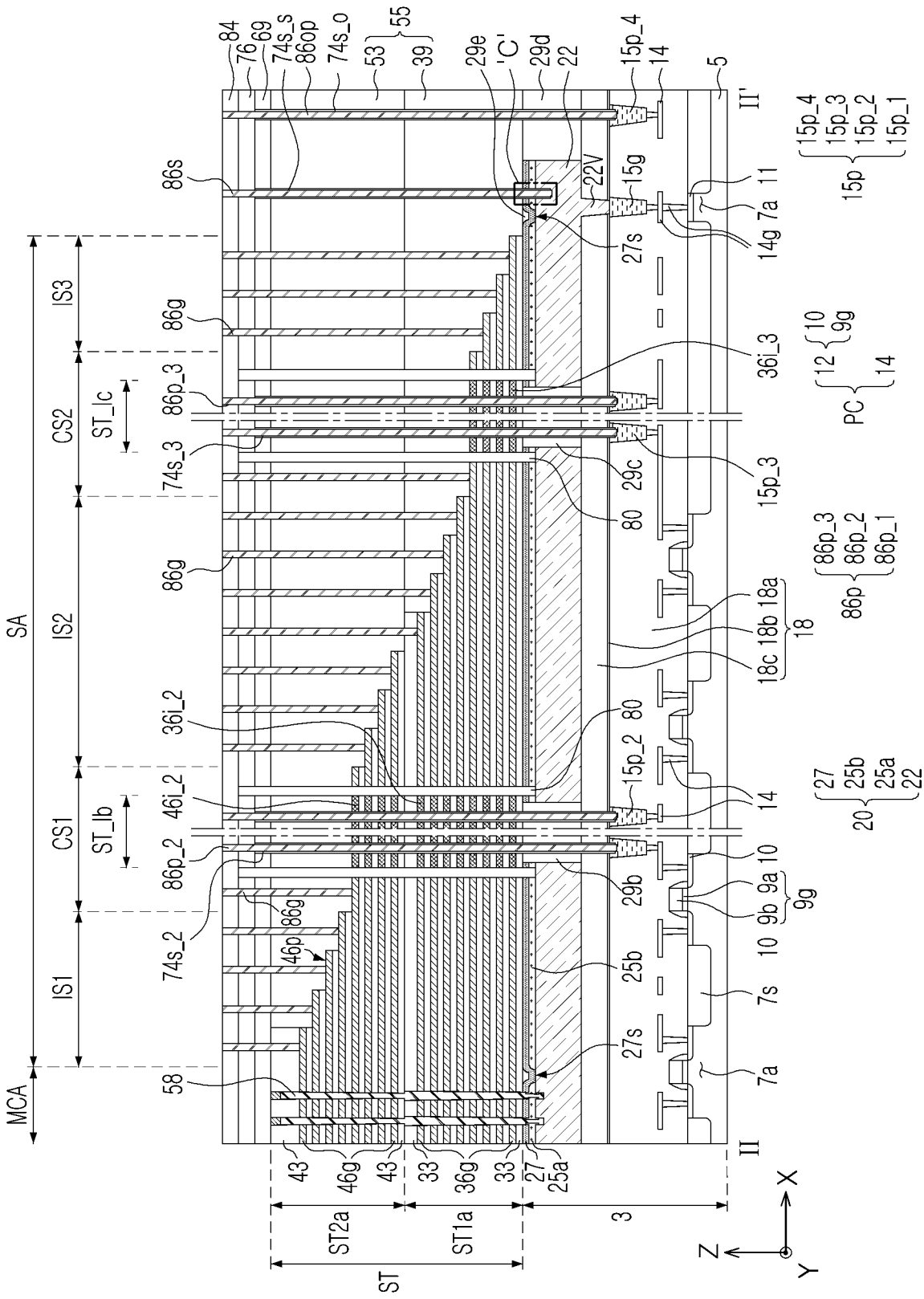
SA
MCA
IS1
IS2
IS3
CS1
CS2
ST_Ib
ST_Ic
ST
ST1a
ST2a
3
II
II'
'C'
84
76
69
74s_s
86op
74s_o
53
39
55
29e
29d
22
15p_4
14
5
86s
22V
15g
27s
11
7a
14g
15p
15p_4
15p_3
15p_2
15p_1
86g
36i_3
10
9g
12
14
PC
86p_3
74s_3
29c
15p_3
80
86p
86p_3
86p_2
86p_1
18a
18b
18c
18
36i_2
15p_2
46i_2
86p_2
29b
9a
9b
9g
74s_2
46p
25b
7s
58
43
46g
33
36g
27
25a
20
25b
25a
22
X
Y
Z

FIG. 17B

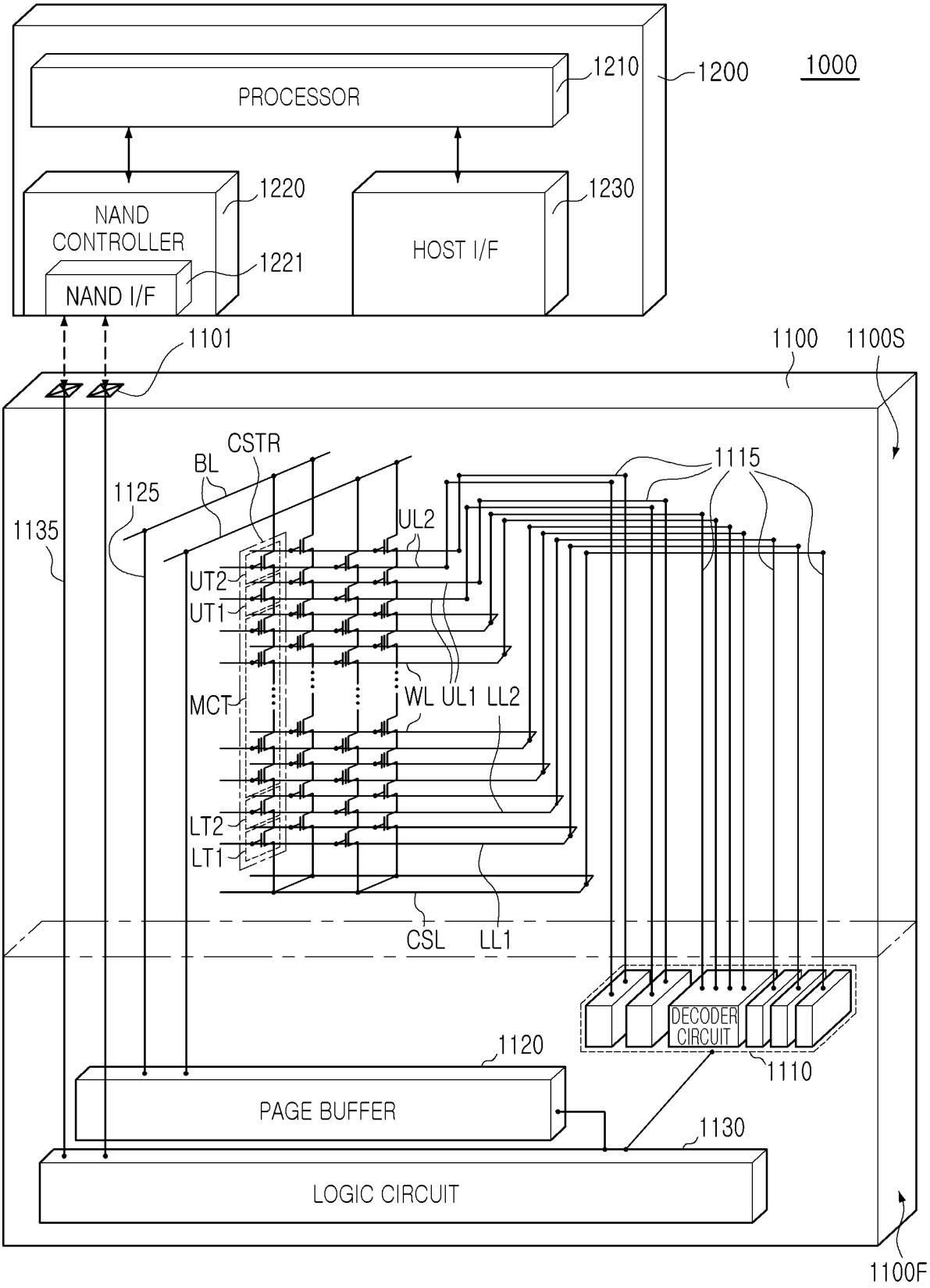
PROCESSOR
1210
1200
1000
NAND CONTROLLER
1220
NAND I/F
1221
HOST I/F
1230
1101
1100
1100S
CSTR
BL
1125
1135
1115
UL2
UT2
UT1
MCT
WL UL1 LL2
LT2
LT1
CSL
LL1
DECODER CIRCUIT
1120
1110
PAGE BUFFER
1130
LOGIC CIRCUIT
1100F

FIG. 18

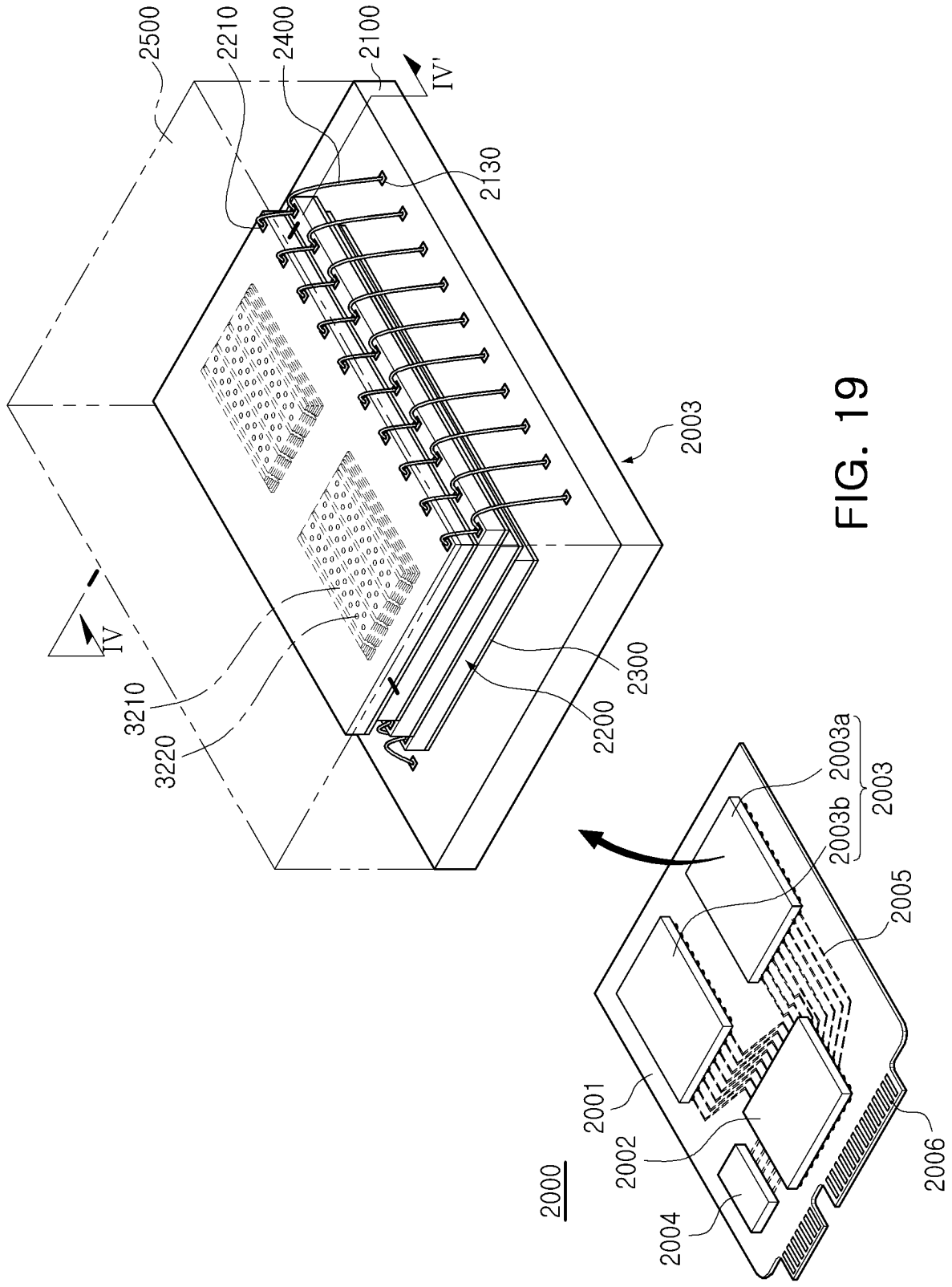
2500
2210
2400
2100
IV'
2130
2003
IV
3210
3220
2300
2200
2003a
2003b
2003
2005
2001
2002
2004
2006
2000

FIG. 19

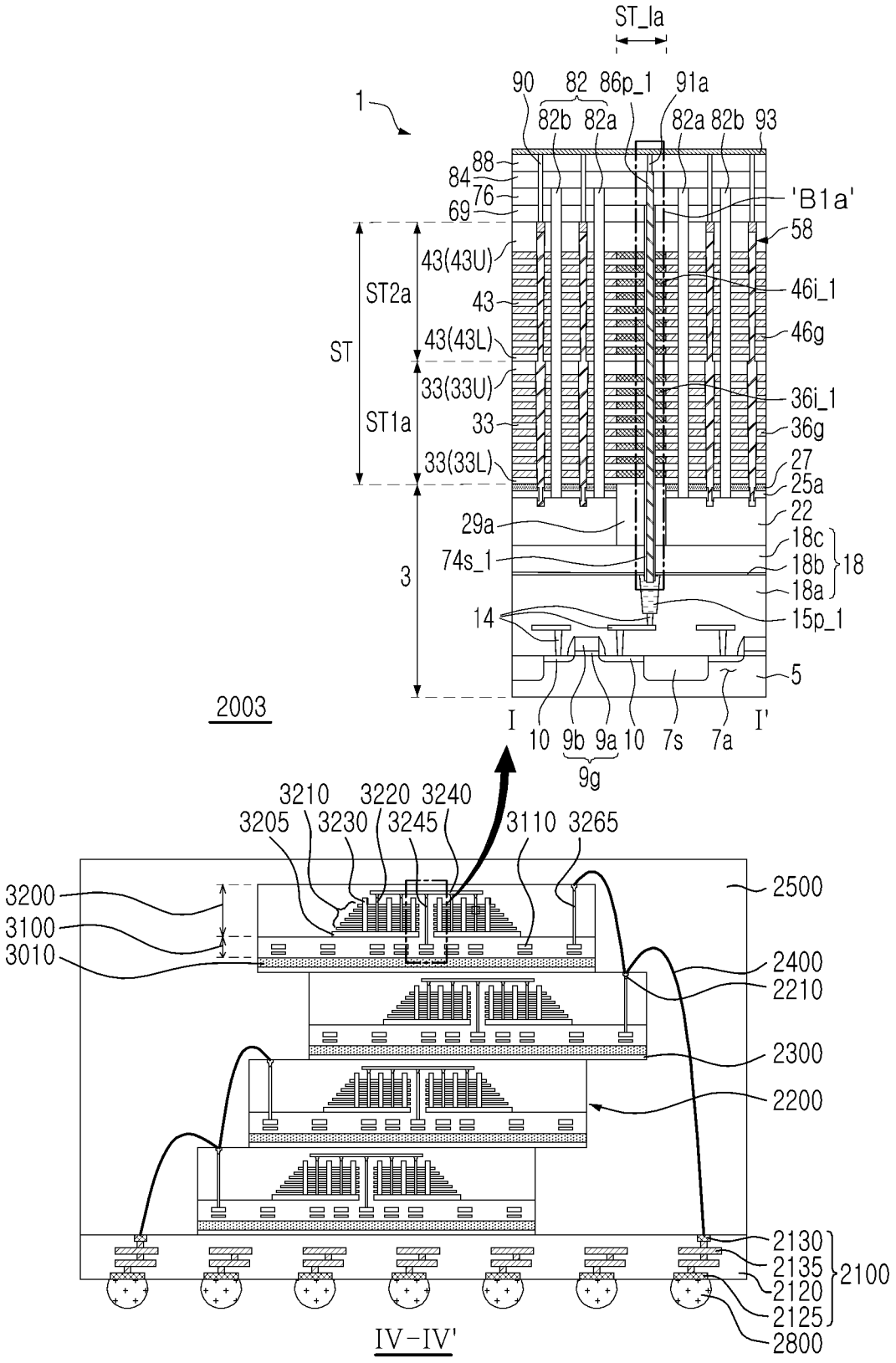
ST_la
1
90
82
86p_1
91a
82b
82a
82a
82b
93
88
84
76
69
'B1a'
58
43(43U)
46i_1
ST2a
43
46g
ST
43(43L)
33(33U)
36i_1
ST1a
33
36g
33(33L)
27
25a
22
29a
18c
74s_1
18b
18
3
18a
14
15p_1
5
2003
I
10
9b
9a
10
7s
7a
I'
9g
3210
3220
3240
3205
3230
3245
3110
3265
3200
3100
3010
2500
2400
2210
2300
2200
2130
2135
2100
2120
2125
2800
IV-IV'

FIG. 20