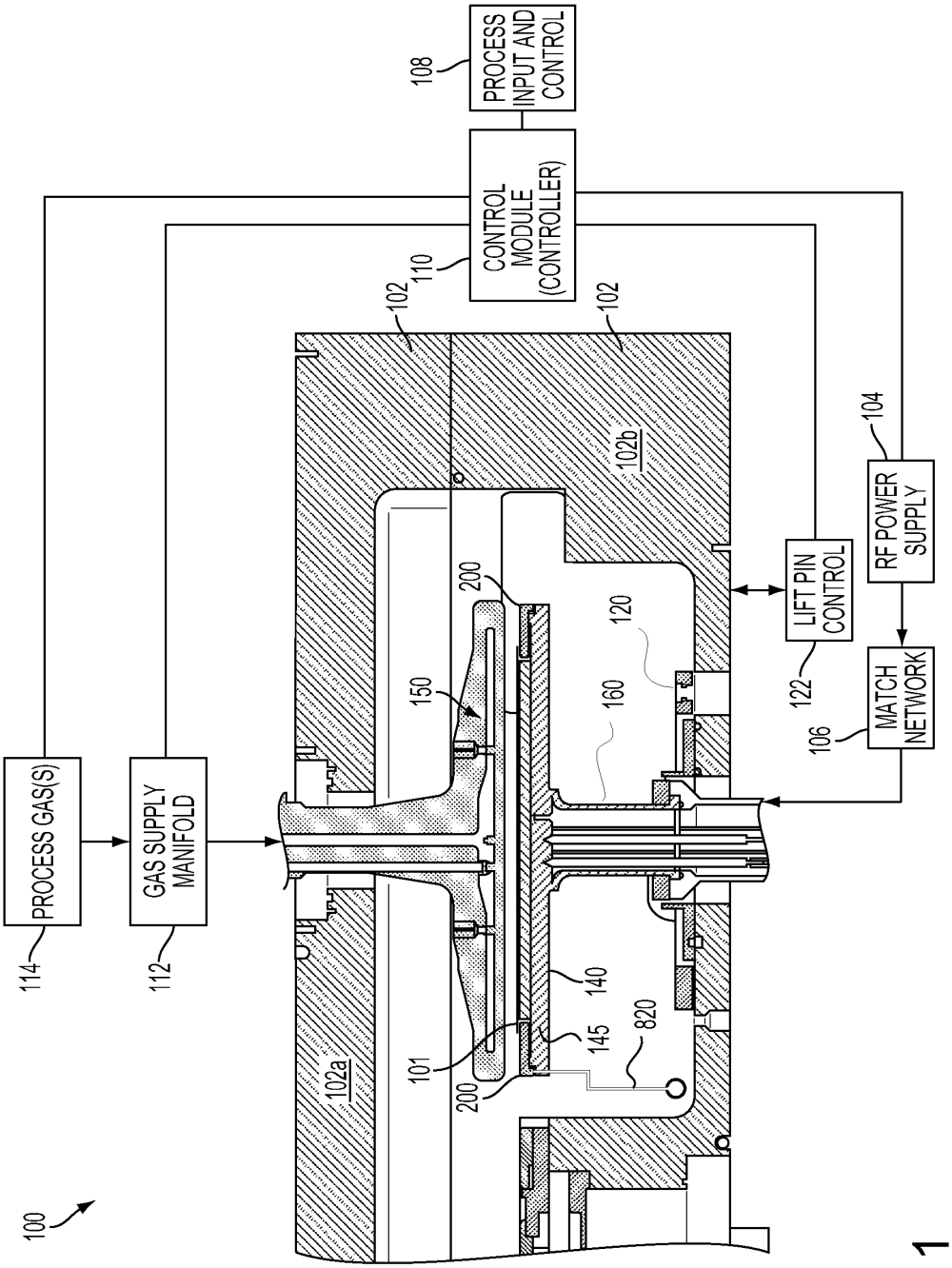
PROCESS INPUT AND CONTROL
108
CONTROL MODULE (CONTROLLER)
110
102
102
102b
104
RF POWER SUPPLY
LIFT PIN CONTROL
122
MATCH NETWORK
106
200
120
150
160
PROCESS GAS(S)
114
GAS SUPPLY MANIFOLD
112
140
145
820
101
200
102a
100

FIG. 1

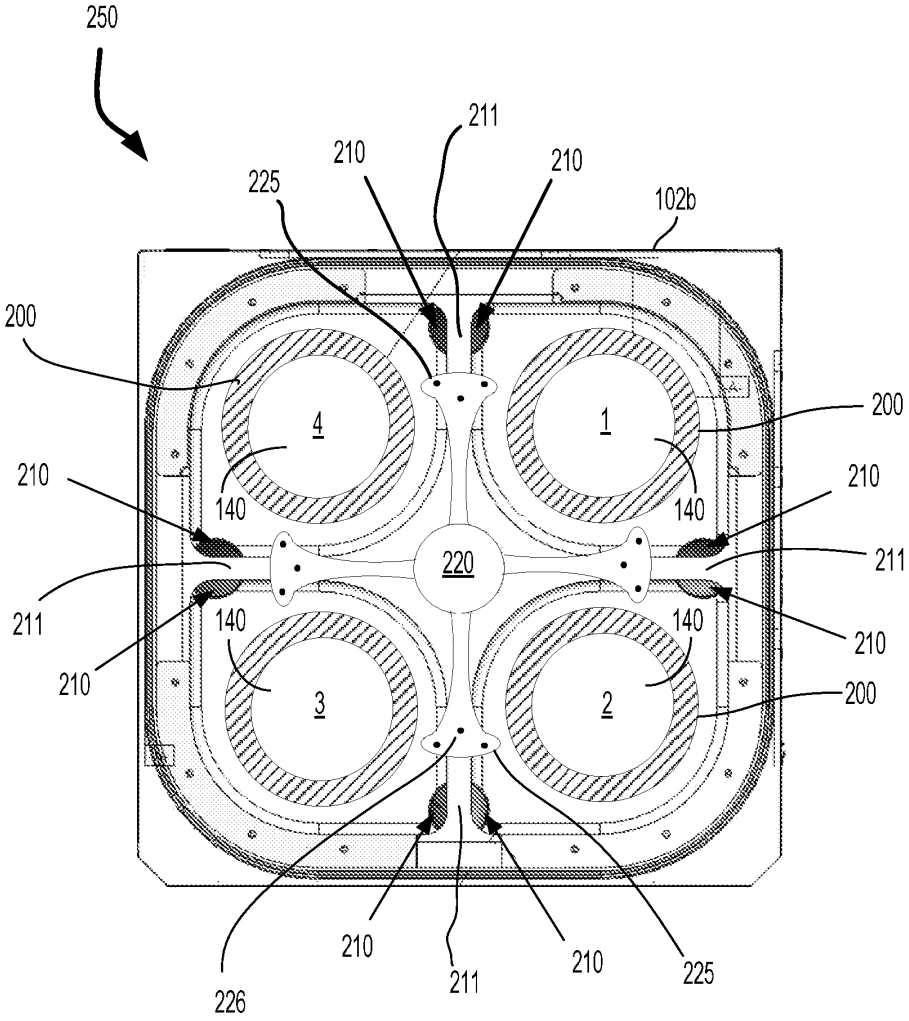
250
211
210
210
225
102b
200
200
4
1
210
140
140
210
211
220
211
140
140
210
210
3
2
200
210
211
210
225
226

FIG. 2A

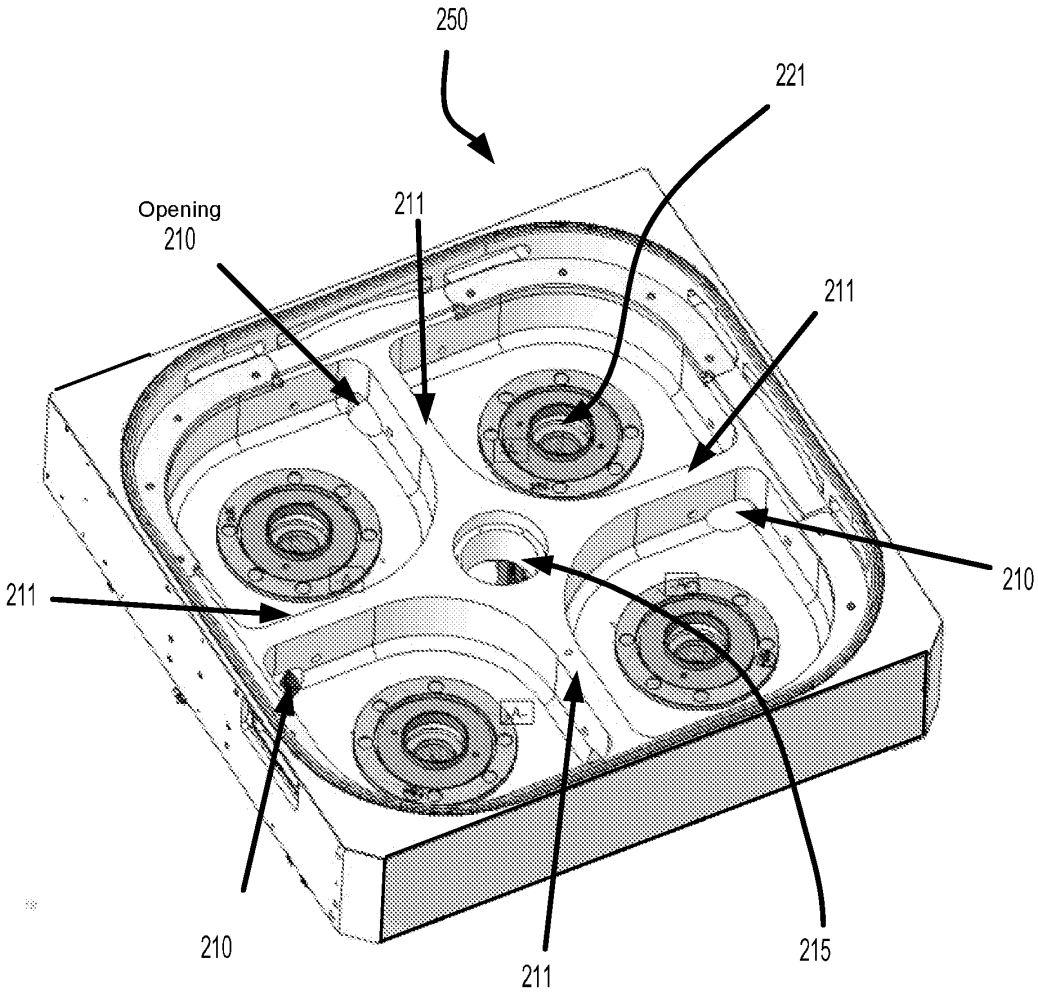

FIG. 2B

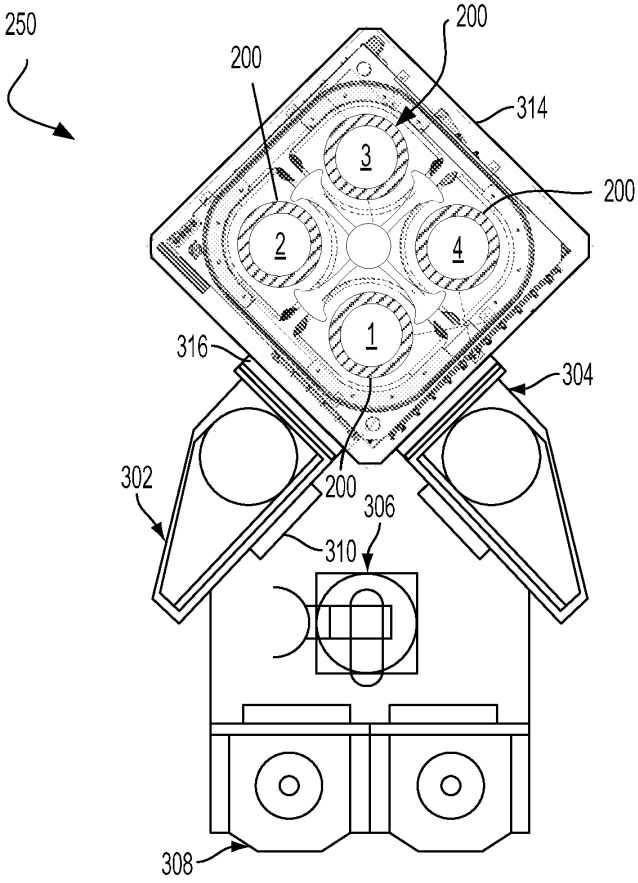

FIG. 3

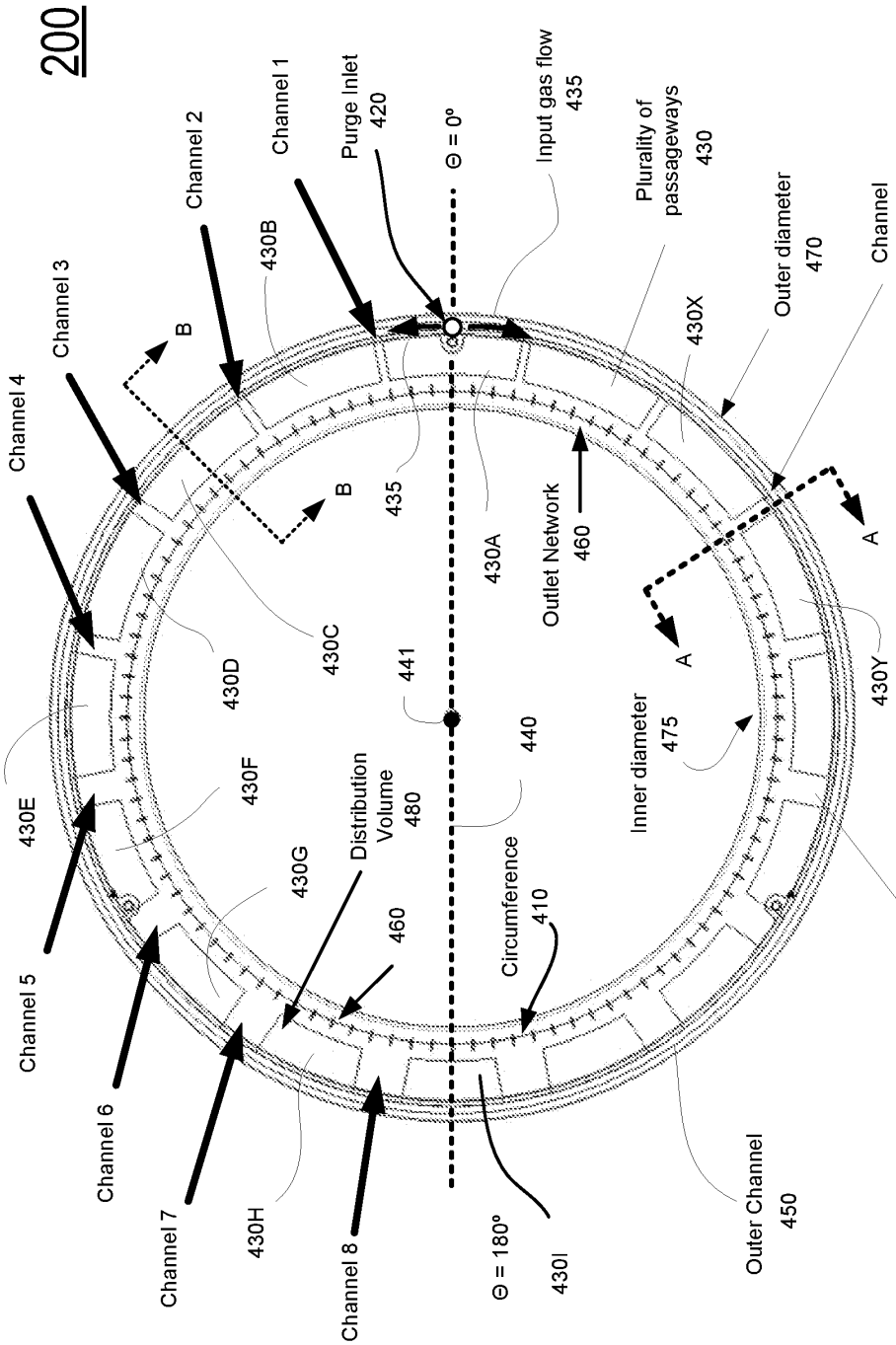
200
Channel 1
Channel 2
Channel 3
Channel 4
Channel 5
Channel 6
Channel 7
Channel 8
Purge Inlet
420
Θ = 0°
Θ = 180°
Input gas flow
435
Plurality of passageways
430
Outer diameter
470
Channel
610
Outlet Network
460
Distribution Volume
480
Circumference
410
Inner diameter
475
Outer Channel
450
430A
430B
430C
430D
430E
430F
430G
430H
430I
430X
430Y
441
440
490
A
B

FIG. 4A

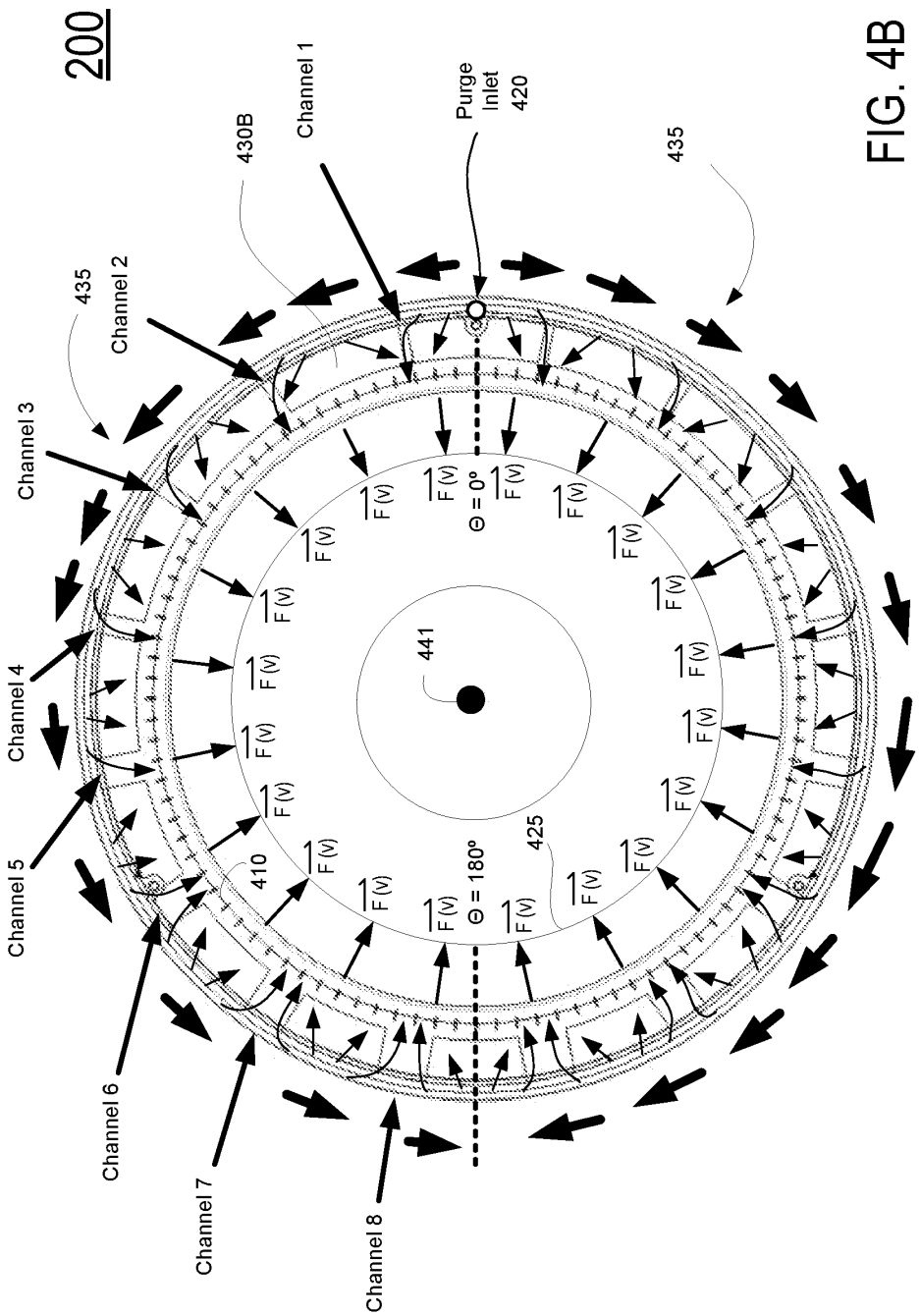
200
Channel 1
Purge Inlet 420
430B
435
Channel 2
435
Channel 3
Channel 4
Channel 5
Channel 6
Channel 7
Channel 8
Θ = 0°
Θ = 180°
441
425
410
1/F(v)

FIG. 4B

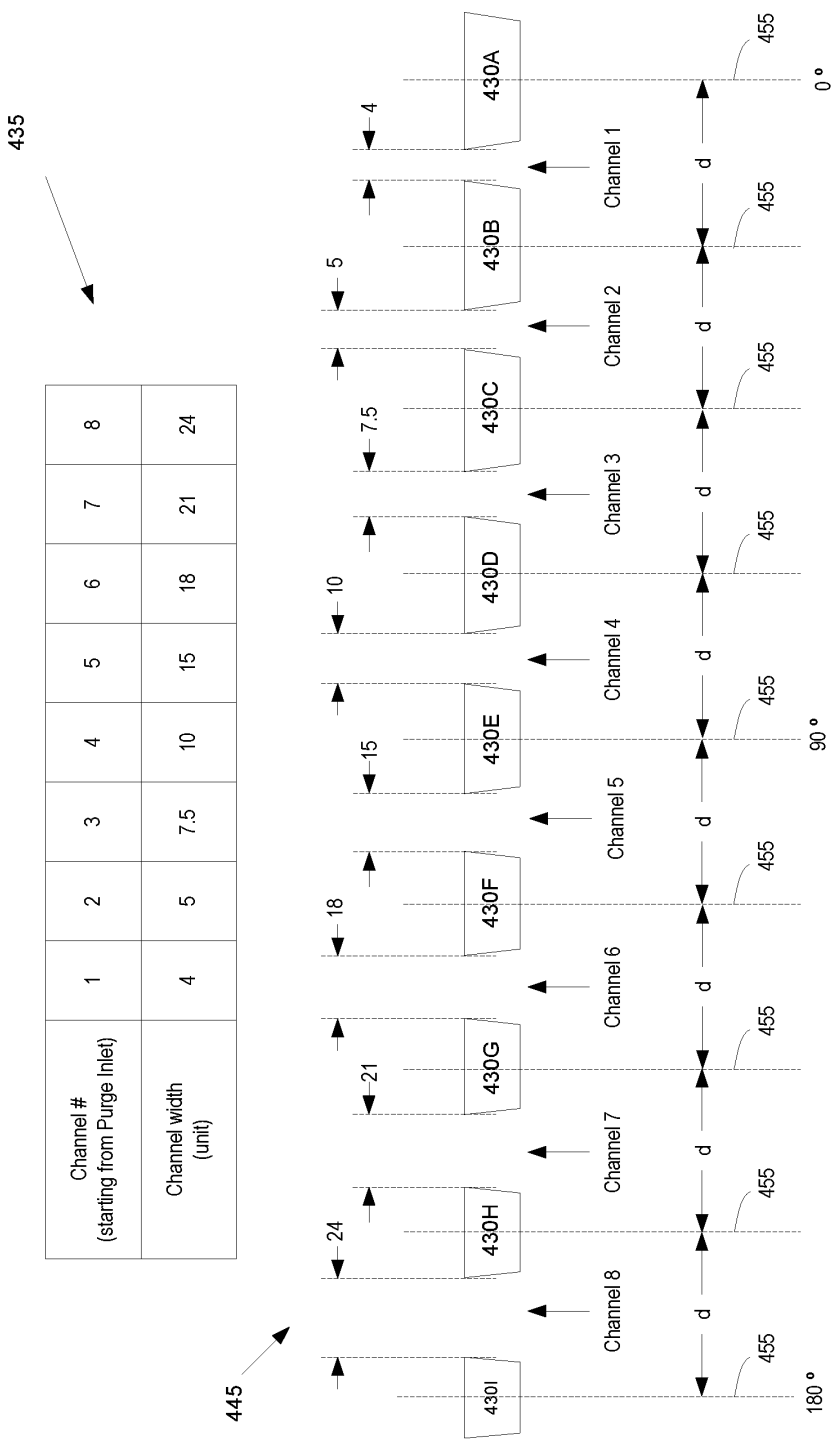

Channel # (starting from Purge Inlet)	1	2	3	4	5	6	7	8
Channel width (unit)	4	5	7.5	10	15	18	21	24

FIG. 4C

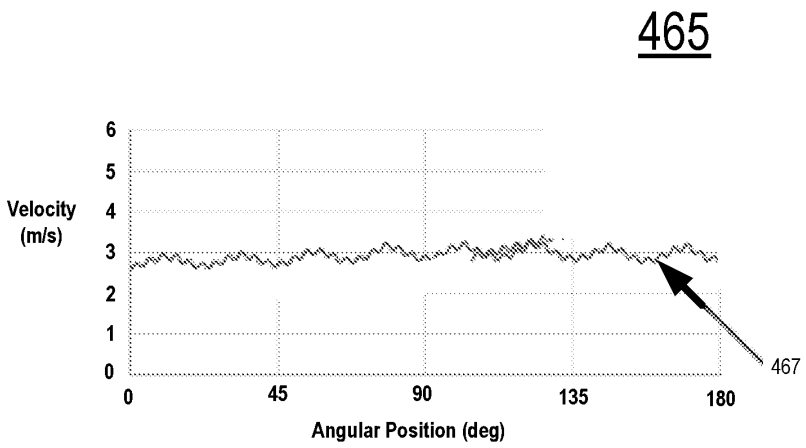
465
Velocity (m/s)
6
5
4
3
2
1
0
0
45
90
135
180
Angular Position (deg)
467

FIG. 4D

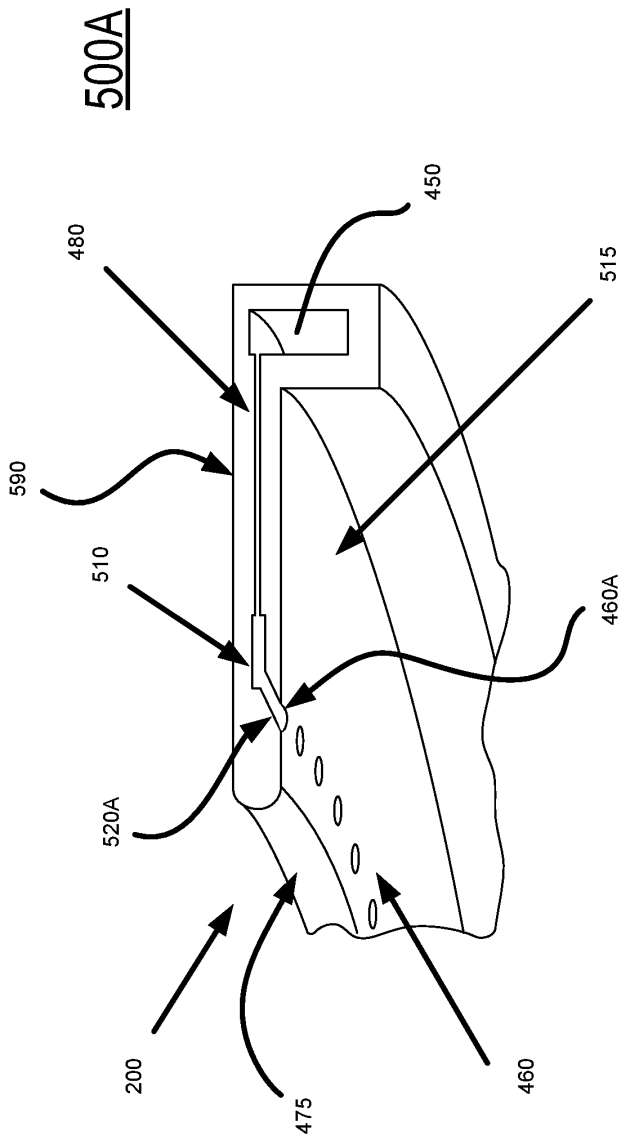

FIG. 5A

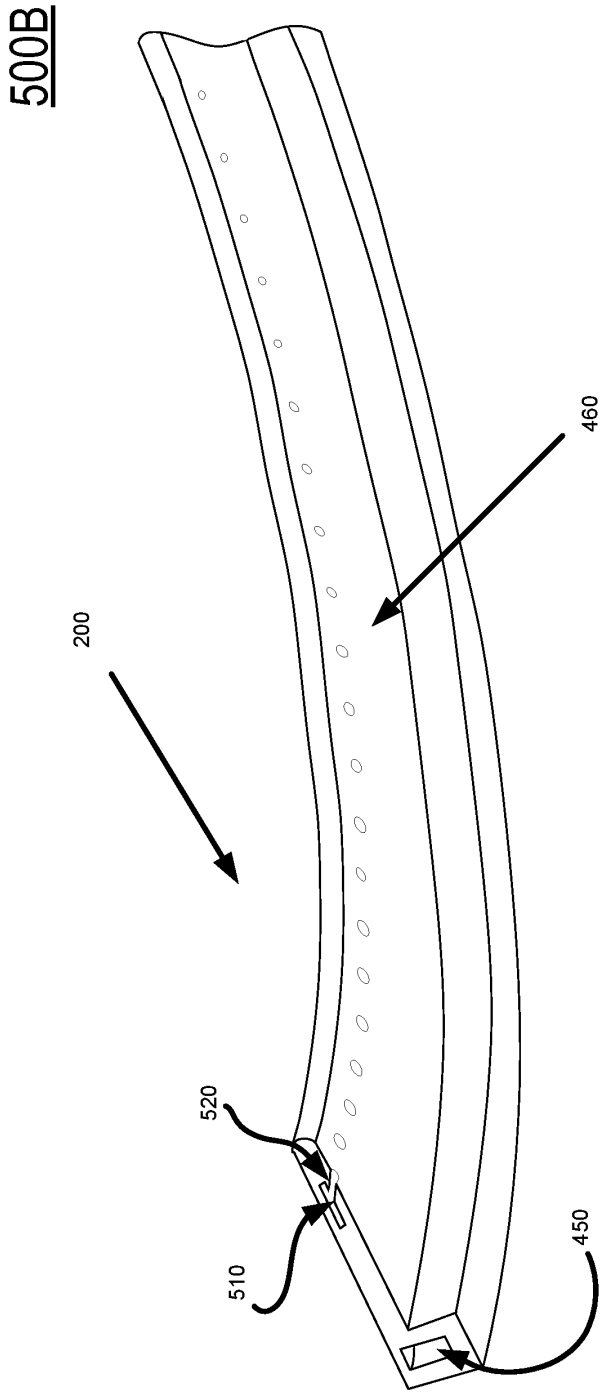

FIG. 5B

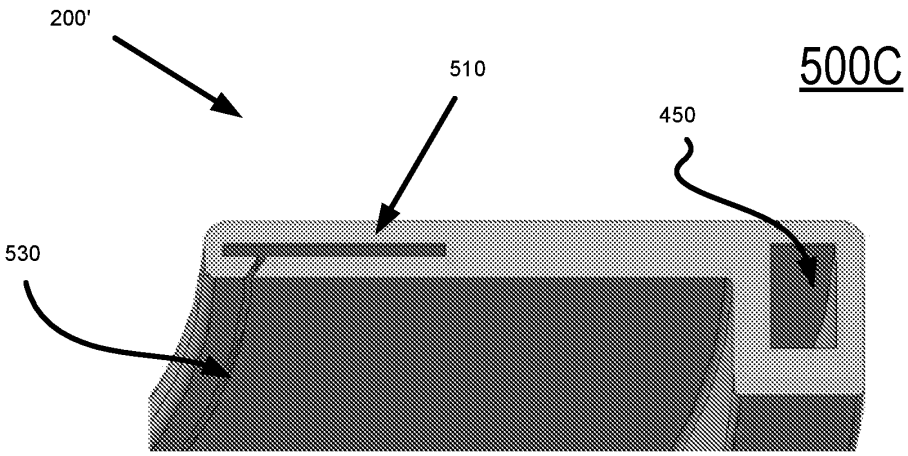

FIG. 5C

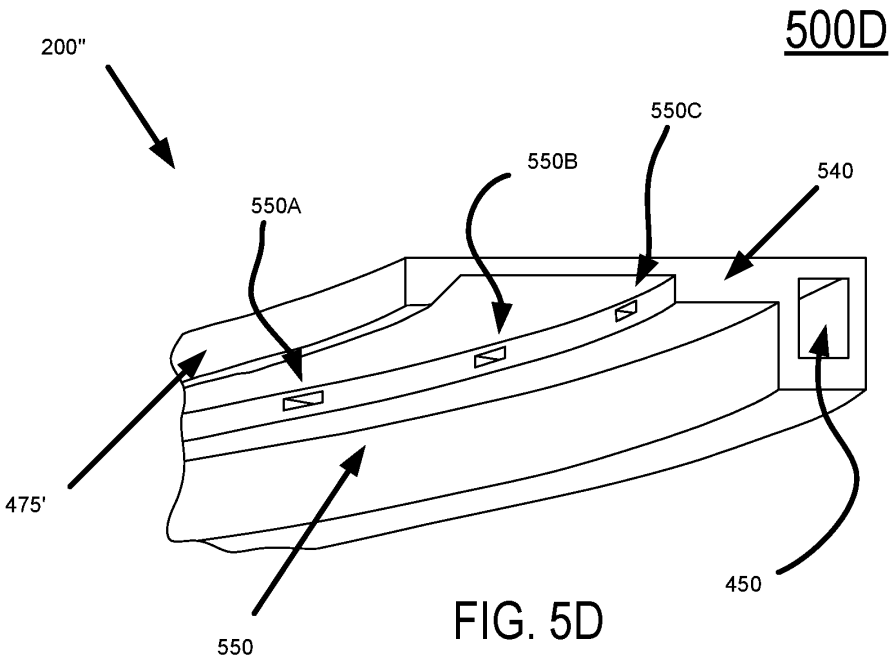

FIG. 5D

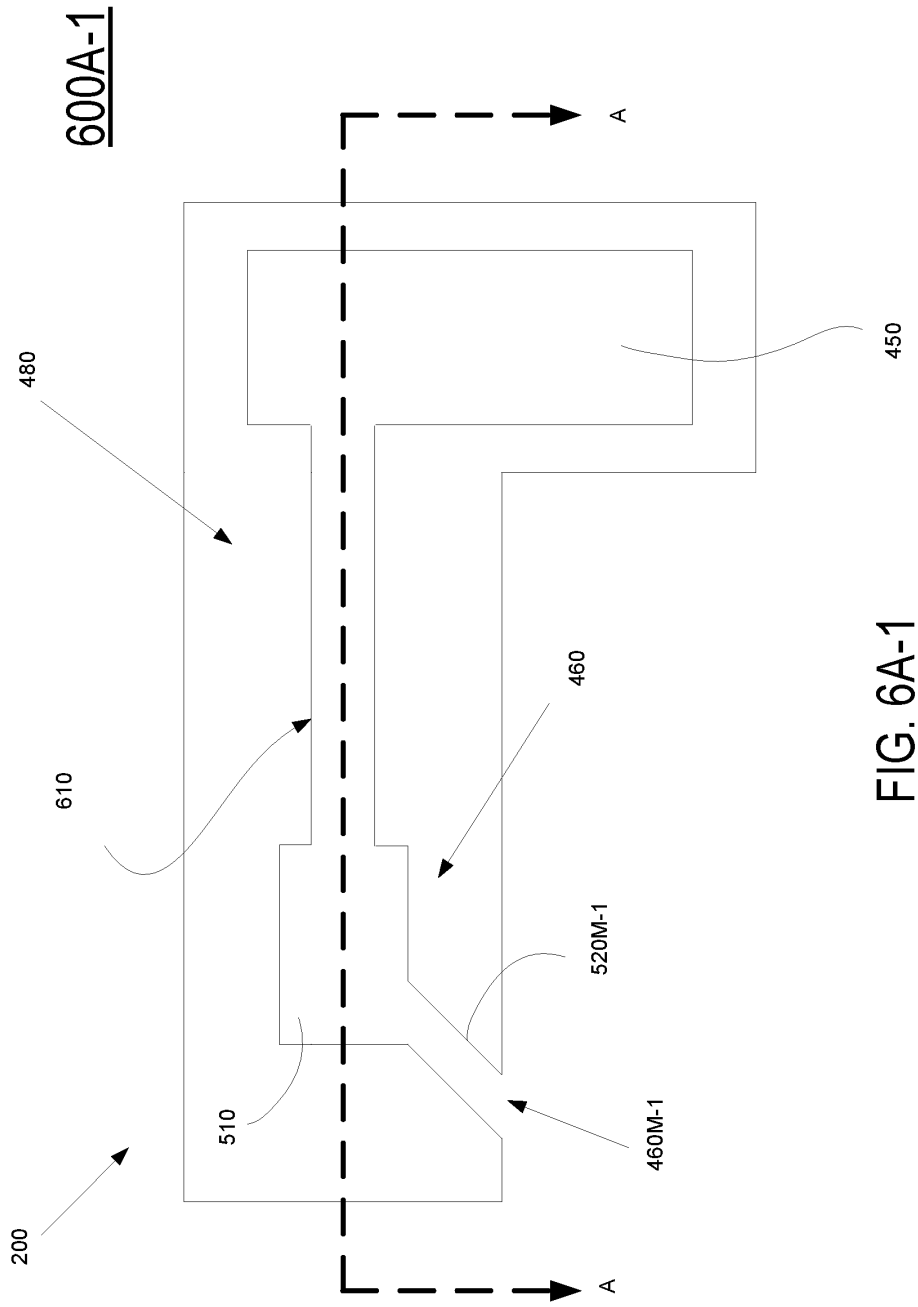

FIG. 6A-1

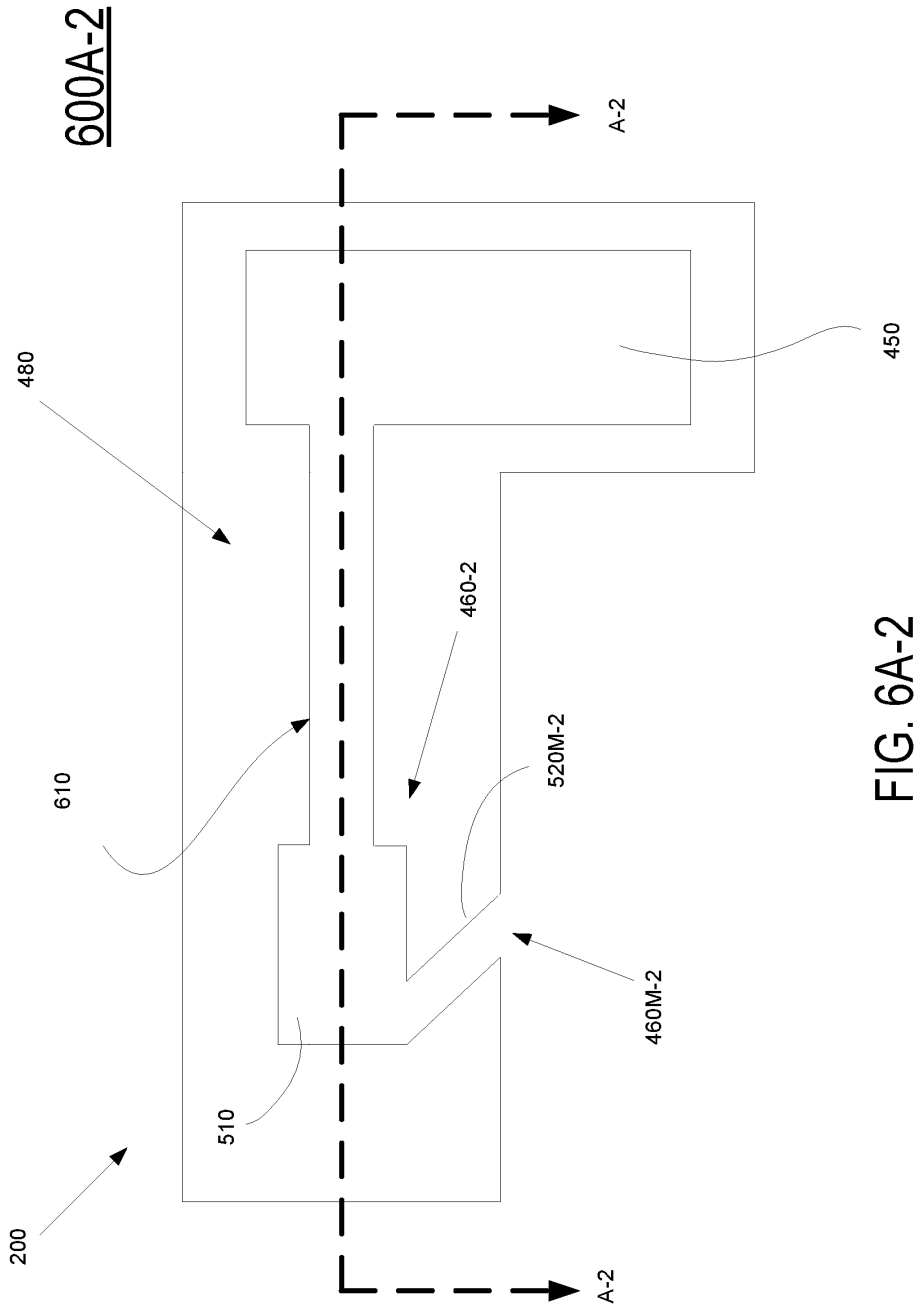

FIG. 6A-2

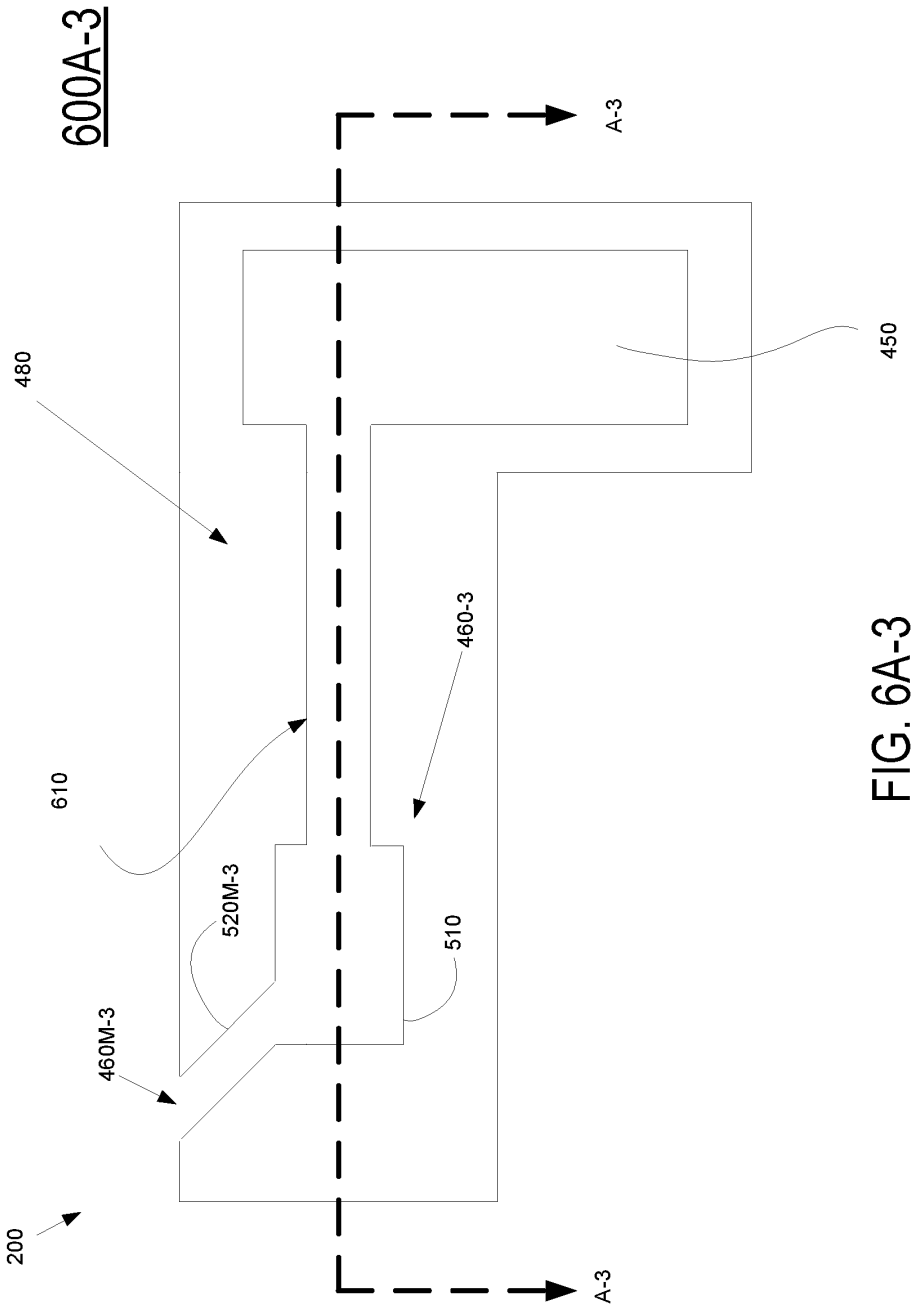

FIG. 6A-3

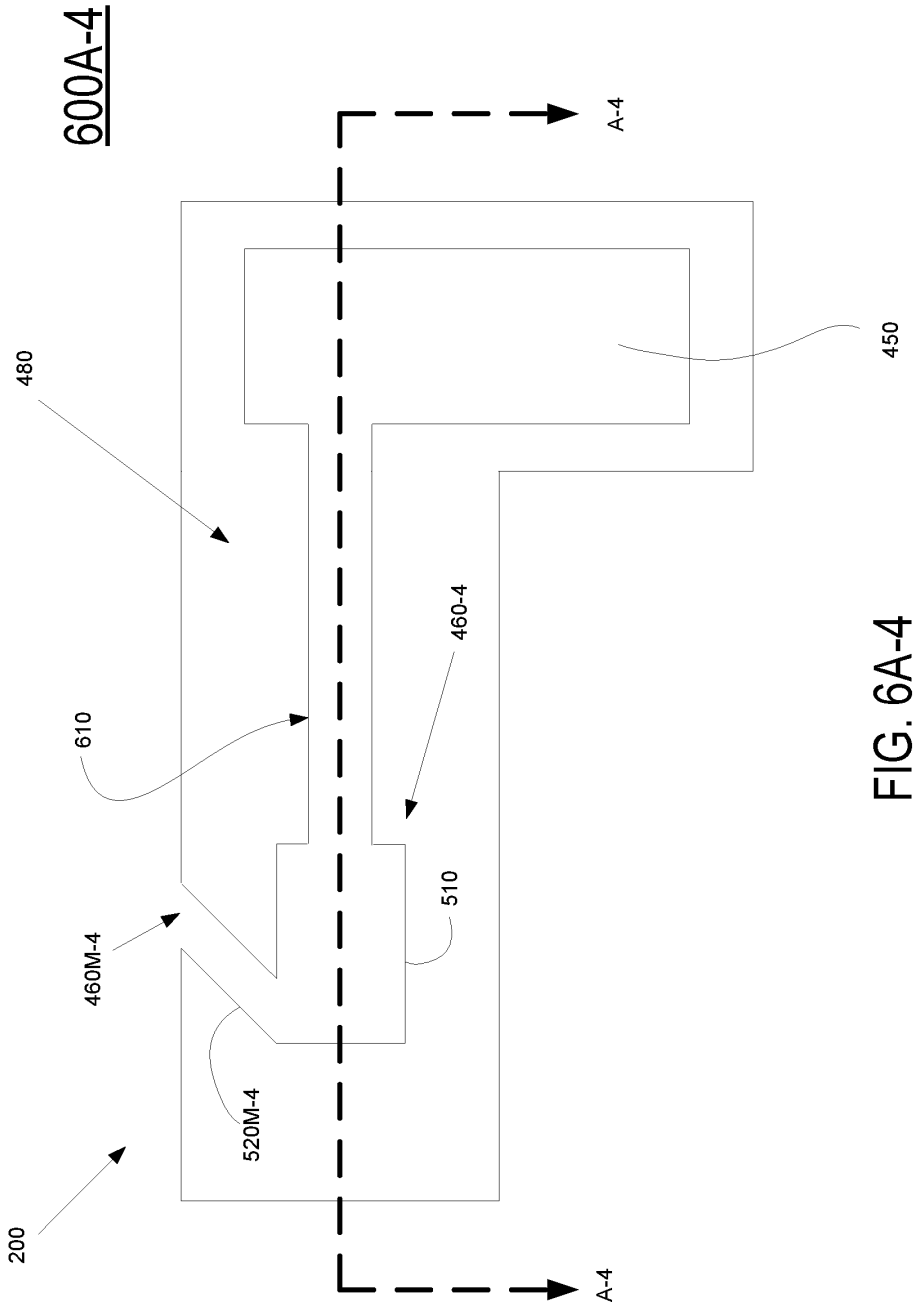

FIG. 6A-4

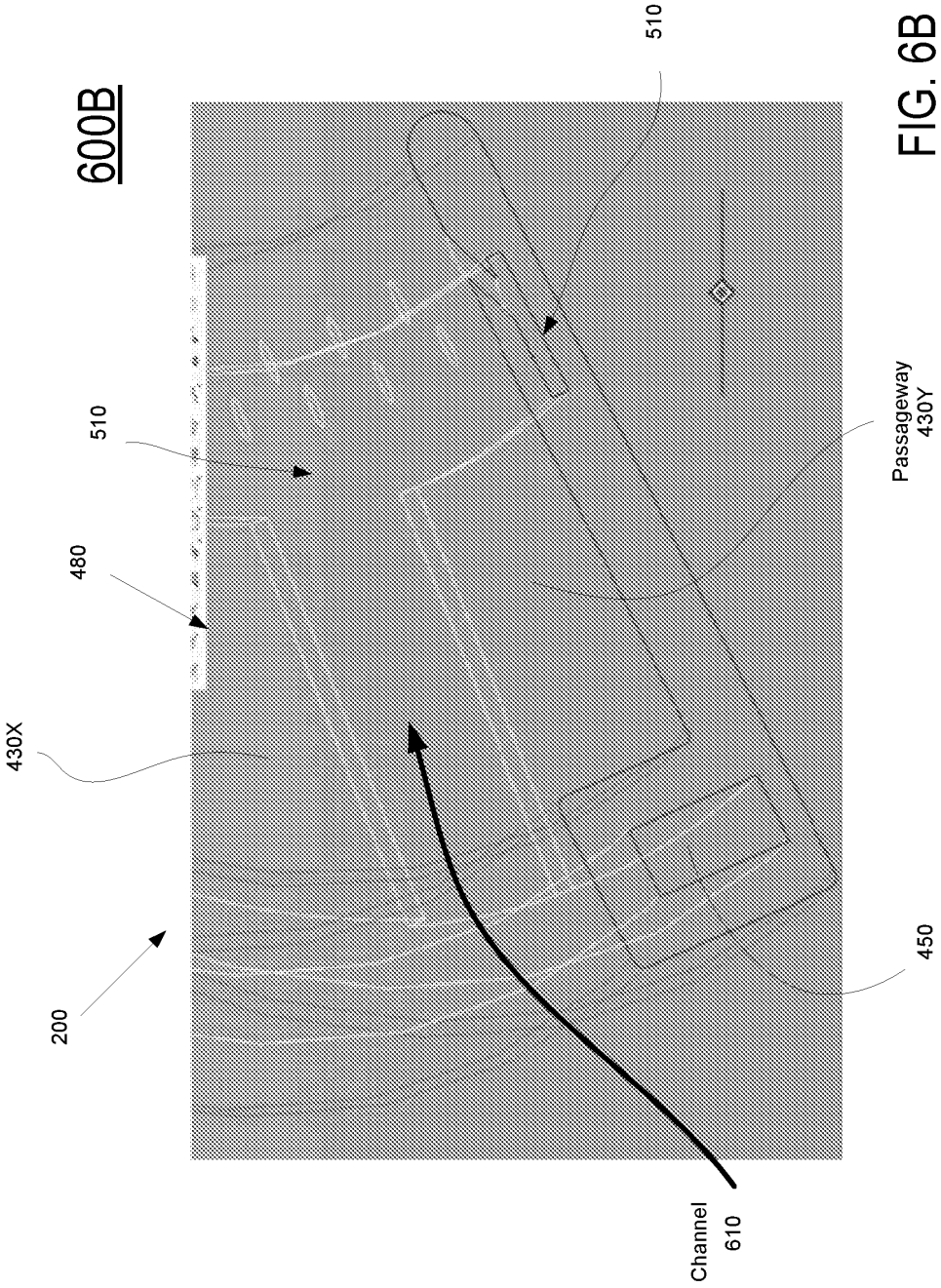

FIG. 6B

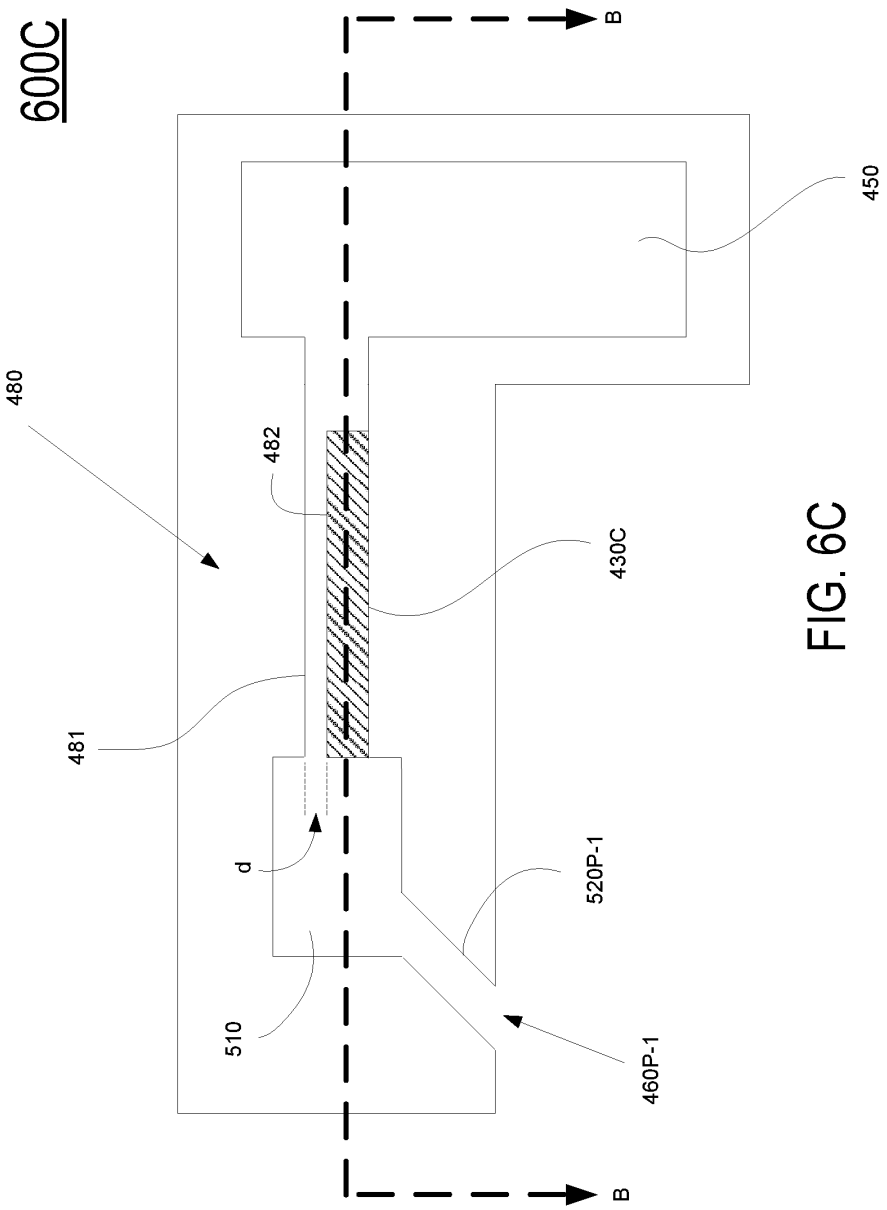

FIG. 6C

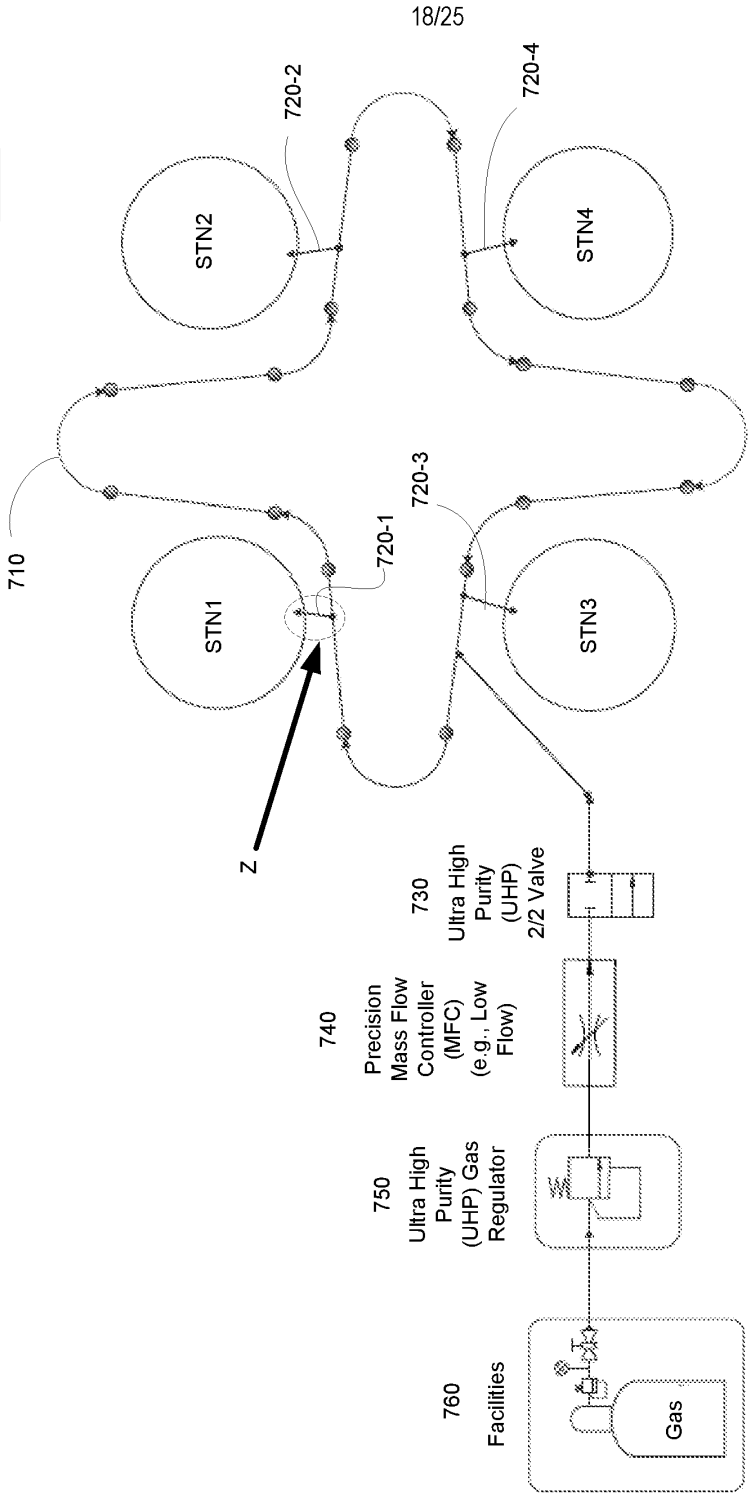
700
710
STN1
STN2
STN3
STN4
720-1
720-2
720-3
720-4
Z
730
Ultra High Purity (UHP) 2/2 Valve
740
Precision Mass Flow Controller (MFC) (e.g., Low Flow)
750
Ultra High Purity (UHP) Gas Regulator
760
Facilities
Gas

FIG. 7

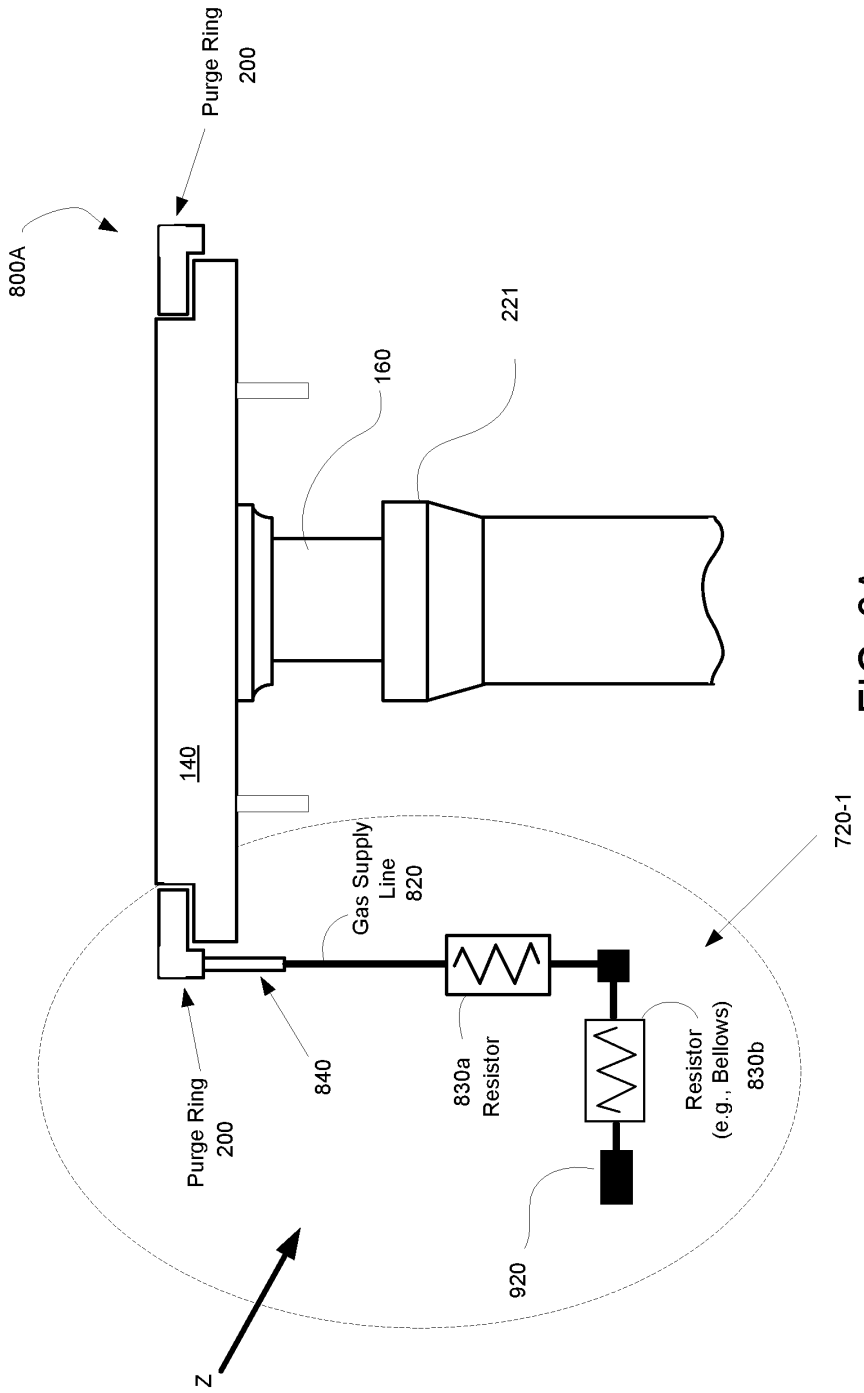
800A
Purge Ring
200
221
160
140
720-1
Gas Supply
Line
820
Purge Ring
200
840
830a
Resistor
Resistor
(e.g., Bellows)
830b
920
Z

FIG. 8A

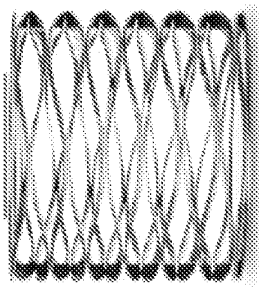
830'

FIG. 8C

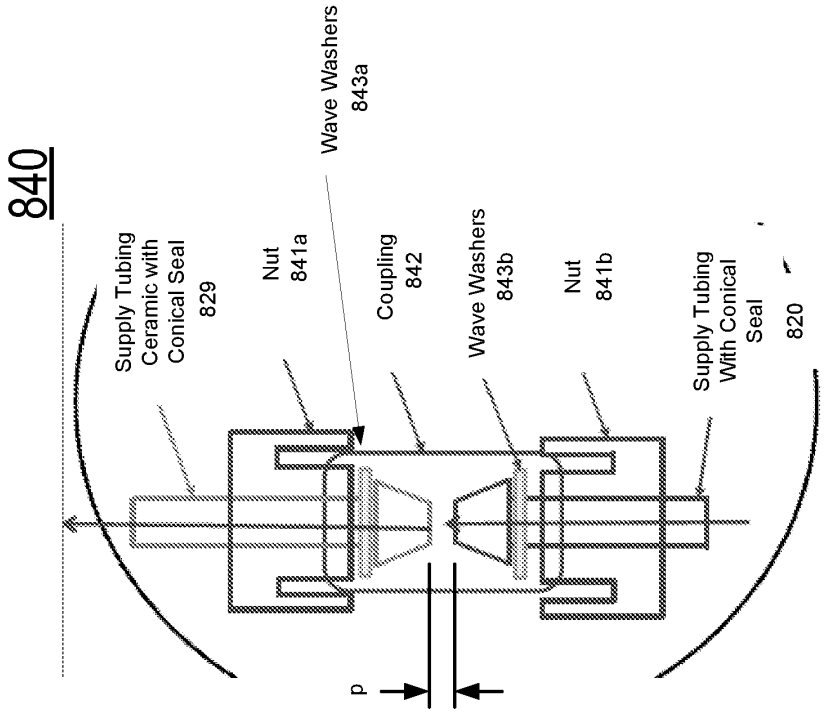
840
Supply Tubing Ceramic with Conical Seal 829
Nut 841a
Wave Washers 843a
Coupling 842
Wave Washers 843b
Nut 841b
Supply Tubing With Conical Seal 820
p

FIG. 8B

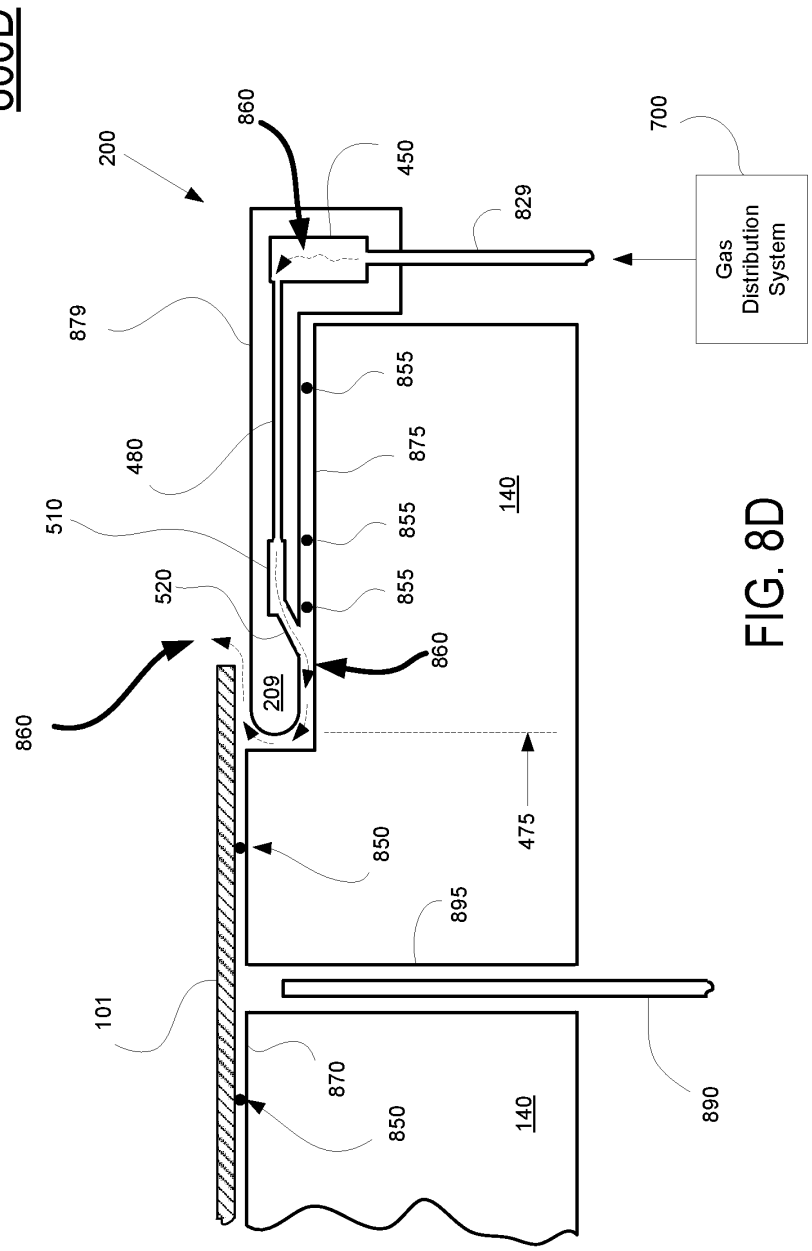
800D
200
860
450
700
829
Gas Distribution System
879
855
875
480
140
510
855
520
855
860
860
209
475
850
895
101
870
850
140
890

FIG. 8D

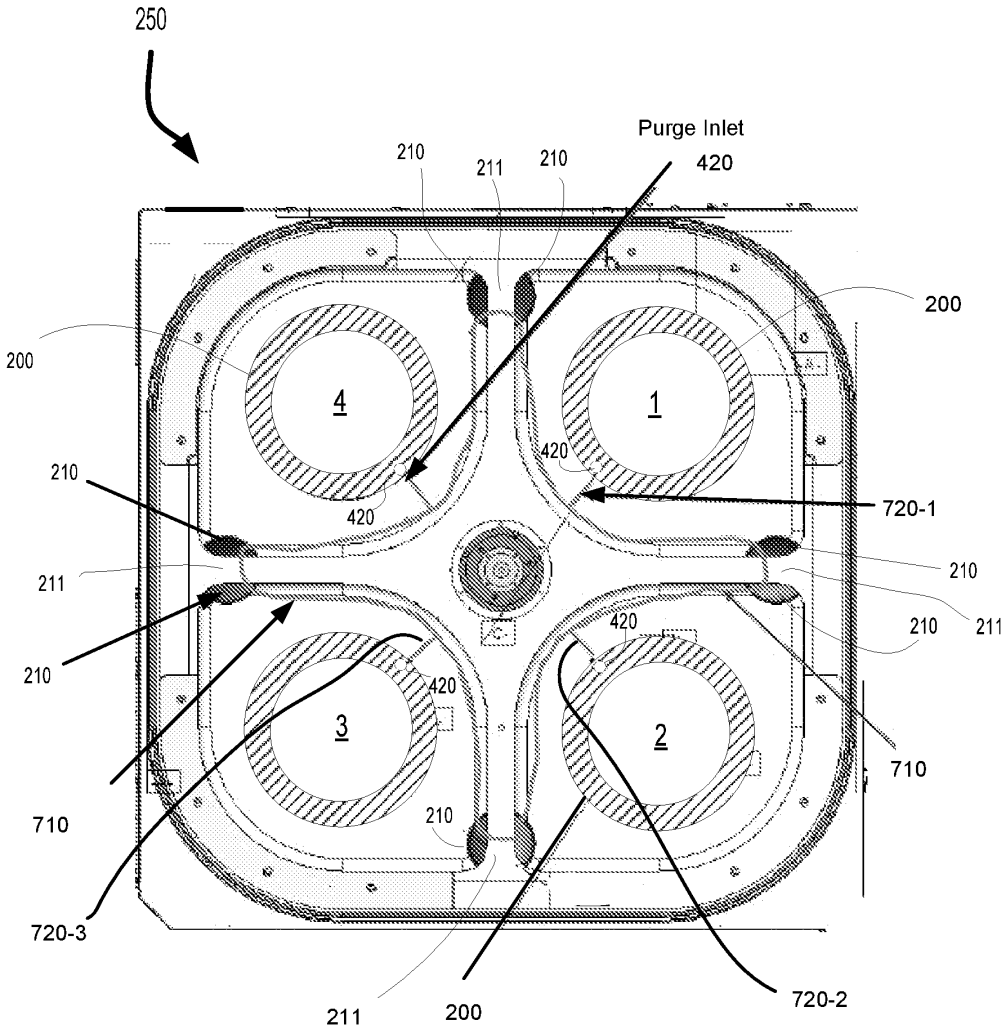
250
Purge Inlet
420
210
211
210
200
200
4
1
420
420
720-1
210
211
210
211
210
420
420
3
2
710
710
210
720-3
211
200
720-2

FIG. 9A

900B

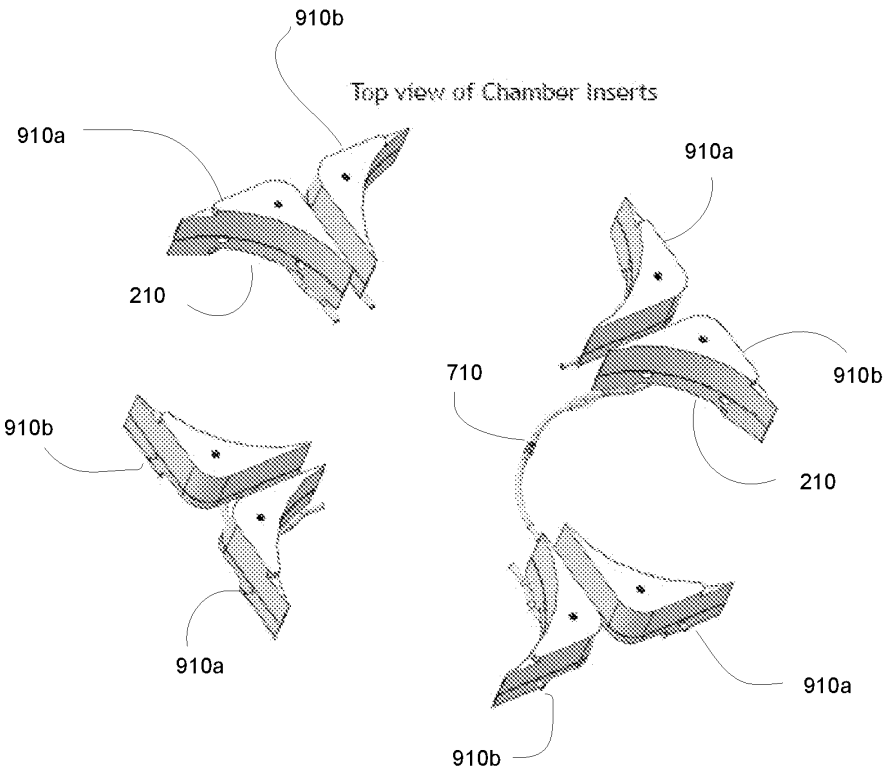
910b
Top view of Chamber Inserts
910a
910a
210
710
910b
910b
210
910a
910a
910b

FIG. 9B

900C

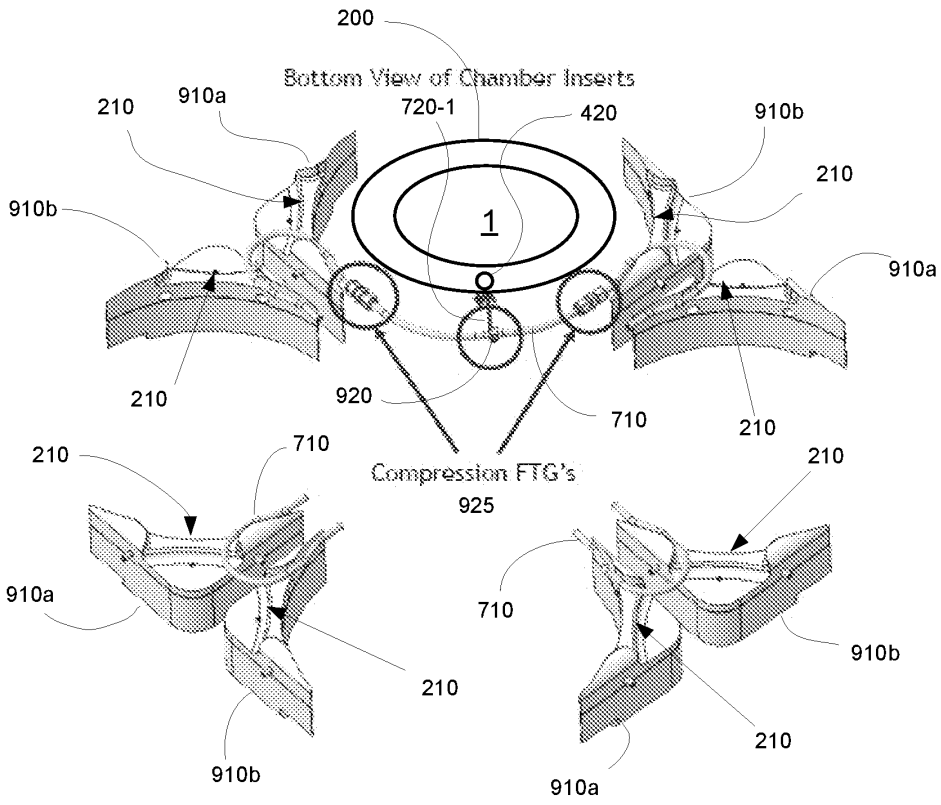
200
Bottom View of Chamber Inserts
210
910a
720-1
420
910b
210
910b
1
910a
210
920
710
210
Compression FTG's
925
210
710
210
910a
710
910b
210
210
910b
910a

FIG. 9C

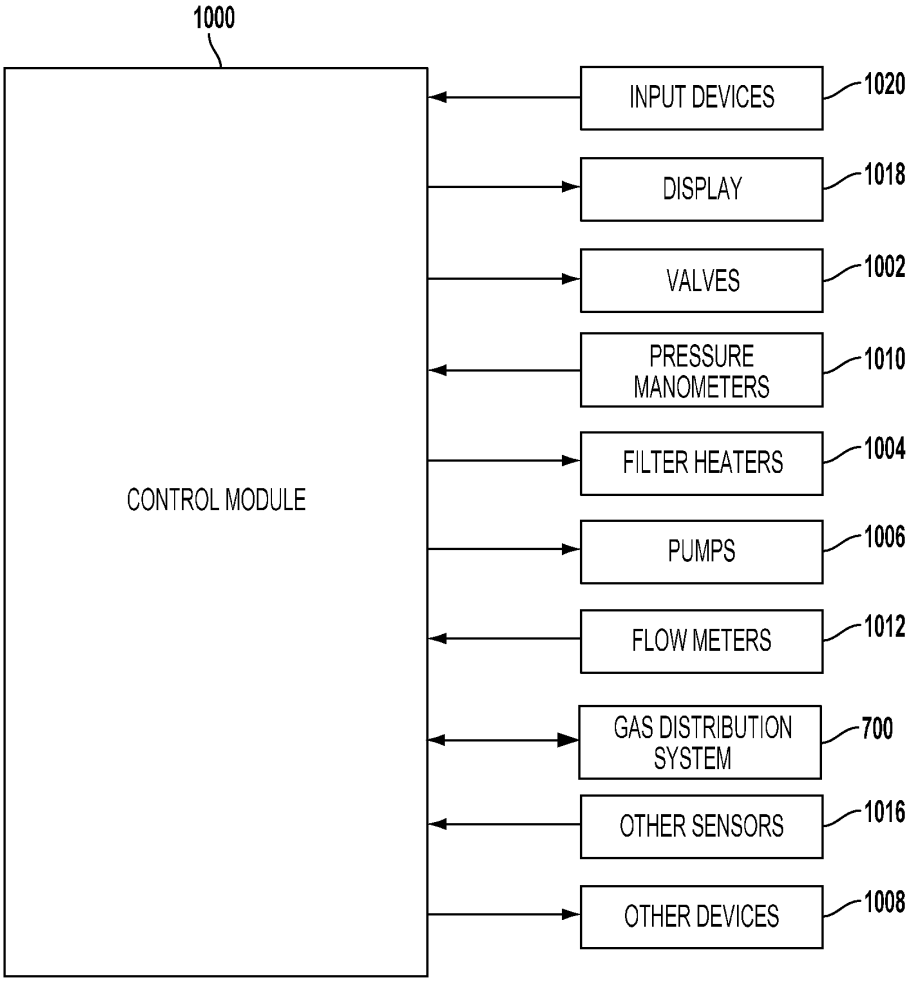
1000
CONTROL MODULE
INPUT DEVICES
1020
DISPLAY
1018
VALVES
1002
PRESSURE MANOMETERS
1010
FILTER HEATERS
1004
PUMPS
1006
FLOW METERS
1012
GAS DISTRIBUTION SYSTEM
700
OTHER SENSORS
1016
OTHER DEVICES
1008

FIG. 10