(12) INTERNATIONAL APPLICATION PUBLISHED UNDER THE PATENT COOPERATION TREATY (PCT)

(19) World Intellectual Property Organization
International Bureau

(43) International Publication Date
19 April 2007 (19.04.2007)

PCT

(10) International Publication Number
WO 2007/044168 A1

(51) International Patent Classification:
H01L 21/77 (2006.01) *C25D 17/28* (2006.01)
C25D 5/02 (2006.01) *G02F 1/1368* (2006.01)
C25D 5/04 (2006.01) *G02F 1/1362* (2006.01)

(21) International Application Number:
PCT/US2006/035375

(22) International Filing Date:
8 September 2006 (08.09.2006)

(25) Filing Language: English

(26) Publication Language: English

(30) Priority Data:
60/725,996 11 October 2005 (11.10.2005) US
11/398,254 4 April 2006 (04.04.2006) US

(71) Applicant *(for all designated States except US)*: **LAM RESEARCH CORPORATION** [US/US]; 4650 Cushing Parkway, Fremont, CA 94538 (US).

(72) Inventor; and

(75) Inventor/Applicant *(for US only)*: **MARKS, Jeffrey** [US/US]; 5985 Gleneagles Circle, San Jose, CA 95138 (US).

(74) Agent: **PENILLA, Albert, S.**; MARTINE PENILLA & GENCARELLA, LLP, 710 Lakeway Drive, Suite 200, Sunnyvale, CA 94085 (US).

(81) Designated States *(unless otherwise indicated, for every kind of national protection available)*: AE, AG, AL, AM, AT, AU, AZ, BA, BB, BG, BR, BW, BY, BZ, CA, CH, CN, CO, CR, CU, CZ, DE, DK, DM, DZ, EC, EE, EG, ES, FI, GB, GD, GE, GH, GM, HN, HR, HU, ID, IL, IN, IS, JP, KE, KG, KM, KN, KP, KR, KZ, LA, LC, LK, LR, LS, LT, LU, LV, LY, MA, MD, MG, MK, MN, MW, MX, MY, MZ, NA, NG, NI, NO, NZ, OM, PG, PH, PL, PT, RO, RS, RU, SC, SD, SE, SG, SK, SL, SM, SV, SY, TJ, TM, TN, TR, TT, TZ, UA, UG, US, UZ, VC, VN, ZA, ZM, ZW.

(84) Designated States *(unless otherwise indicated, for every kind of regional protection available)*: ARIPO (BW, GH, GM, KE, LS, MW, MZ, NA, SD, SL, SZ, TZ, UG, ZM, ZW), Eurasian (AM, AZ, BY, KG, KZ, MD, RU, TJ, TM), European (AT, BE, BG, CH, CY, CZ, DE, DK, EE, ES, FI, FR, GB, GR, HU, IE, IS, IT, LT, LU, LV, MC, NL, PL, PT, RO, SE, SI, SK, TR), OAPI (BF, BJ, CF, CG, CI, CM, GA, GN, GQ, GW, ML, MR, NE, SN, TD, TG).

Published:
— *with international search report*

For two-letter codes and other abbreviations, refer to the "Guidance Notes on Codes and Abbreviations" appearing at the beginning of each regular issue of the PCT Gazette.

(54) **Title:** METHODS AND APPARATUS FOR FABRICATING CONDUCTIVE FEATURES ON GLASS SUBSTRATES USED IN LIQUID CRYSTAL DISPLAYS

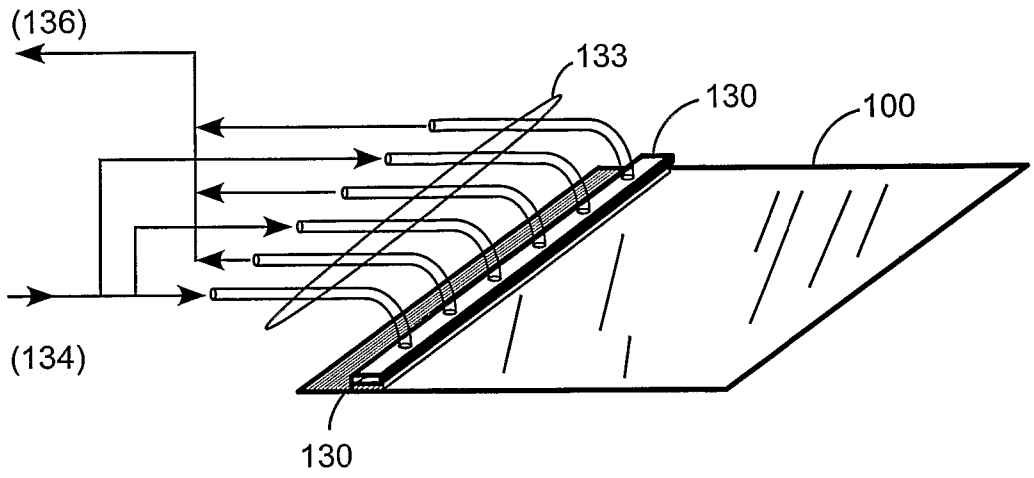

(57) **Abstract:** Methods and systems for defining metal features to be part of a liquid crystal display (LCD) is provided. The method is applied to a glass substrate, and the glass substrate has a blanket conductive metal layer (e.g., a barrier layer) defined on the glass substrate or a layer of the glass substrate. An inverse photoresist mask is applied over the blanket conductive metal layer. A plating meniscus is then formed over the inverse photoresist mask. The plating meniscus contains at least an electrolytic solution and a plating chemistry, where the plating meniscus forms metal features in regions over the blanket conductive metal layer not covered by the inverse photoresist mask.

WO 2007/044168 A1