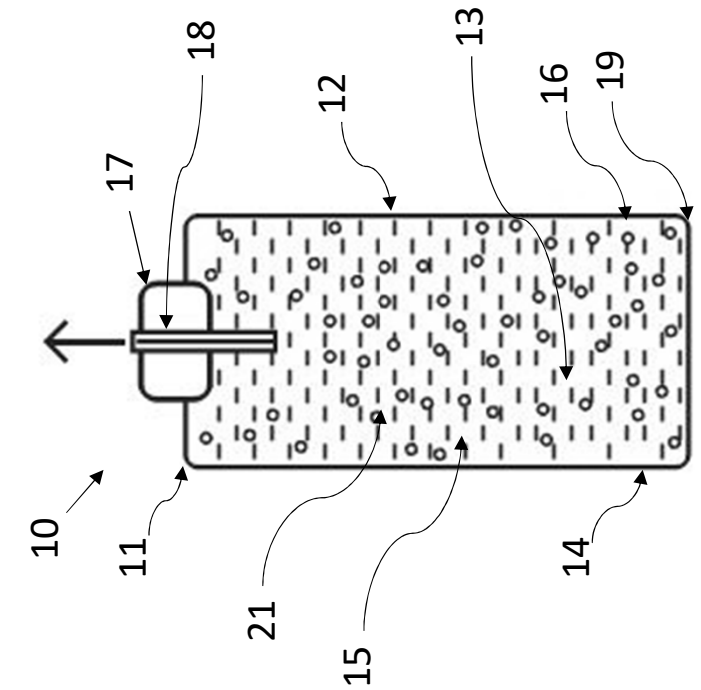

FIG. 2

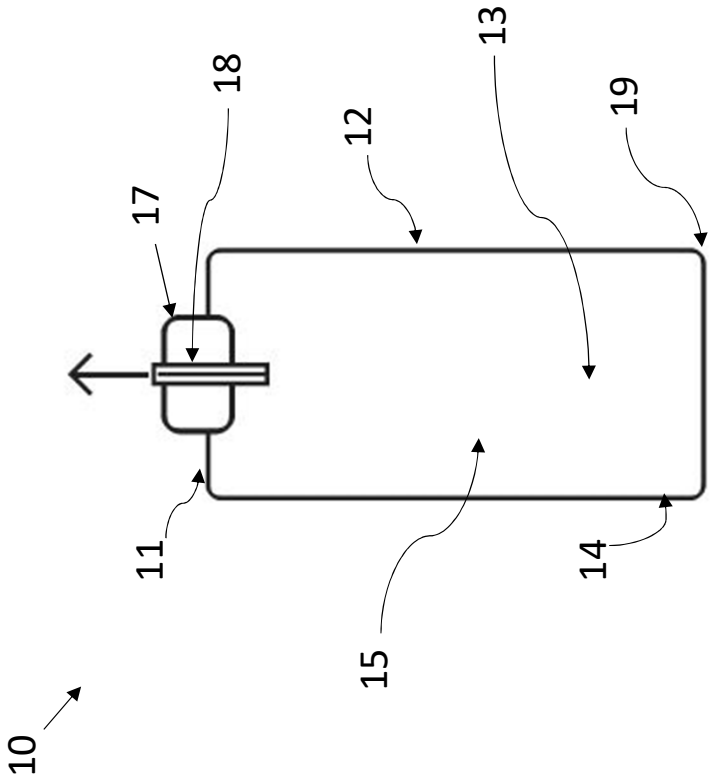

FIG. 1

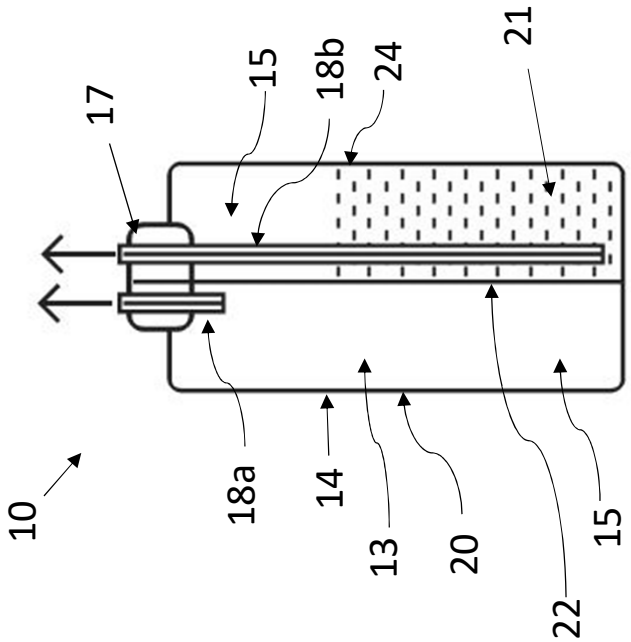
17
15
18b
24
21
10
18a
14
13
20
22
15

FIG 3b

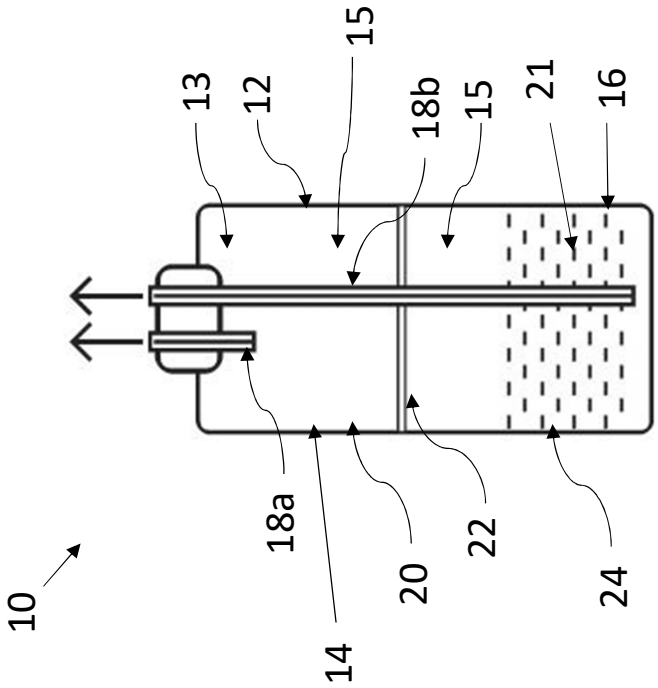
13
12
15
18b
15
21
16
10
18a
14
20
22
24

FIG 3a

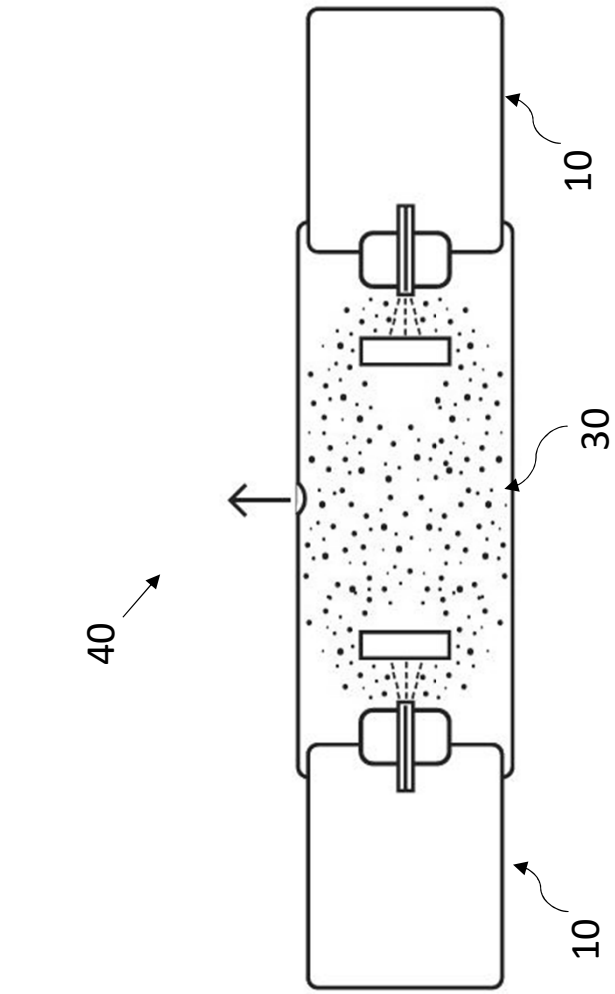

FIG 5

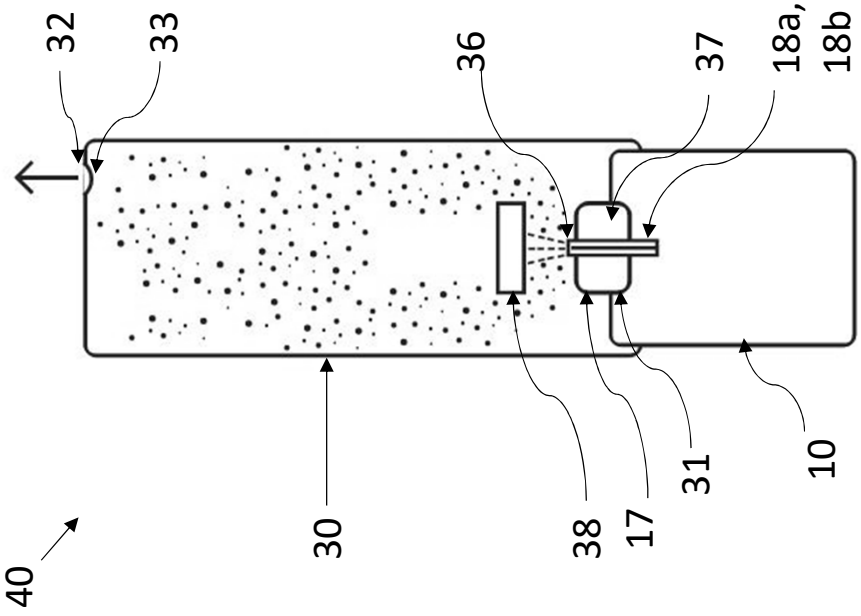

FIG 4

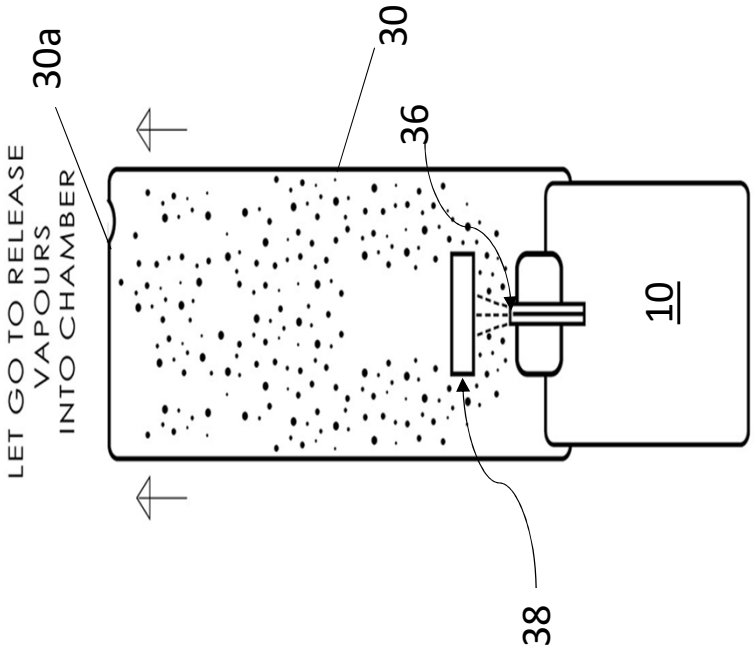
LET GO TO RELEASE
VAPOURS
INTO CHAMBER
30a
30
36
10
38

FIG 6b

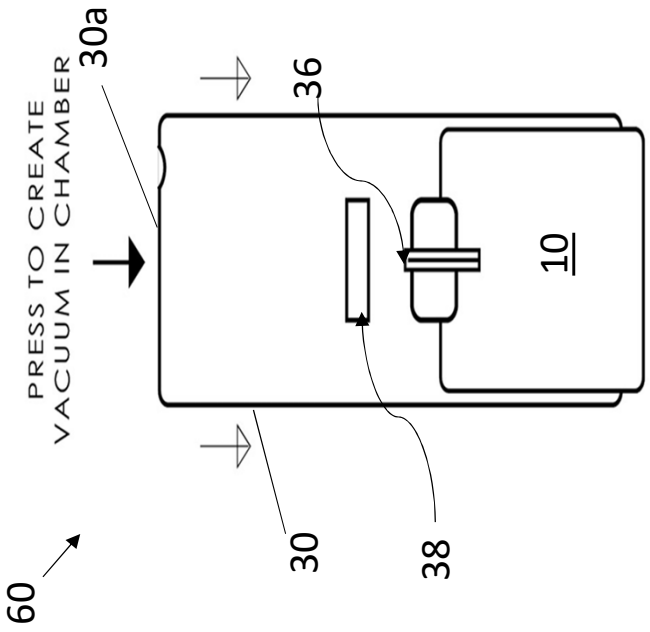
PRESS TO CREATE
VACUUM IN CHAMBER
30a
36
10
60
30
38

FIG 6a

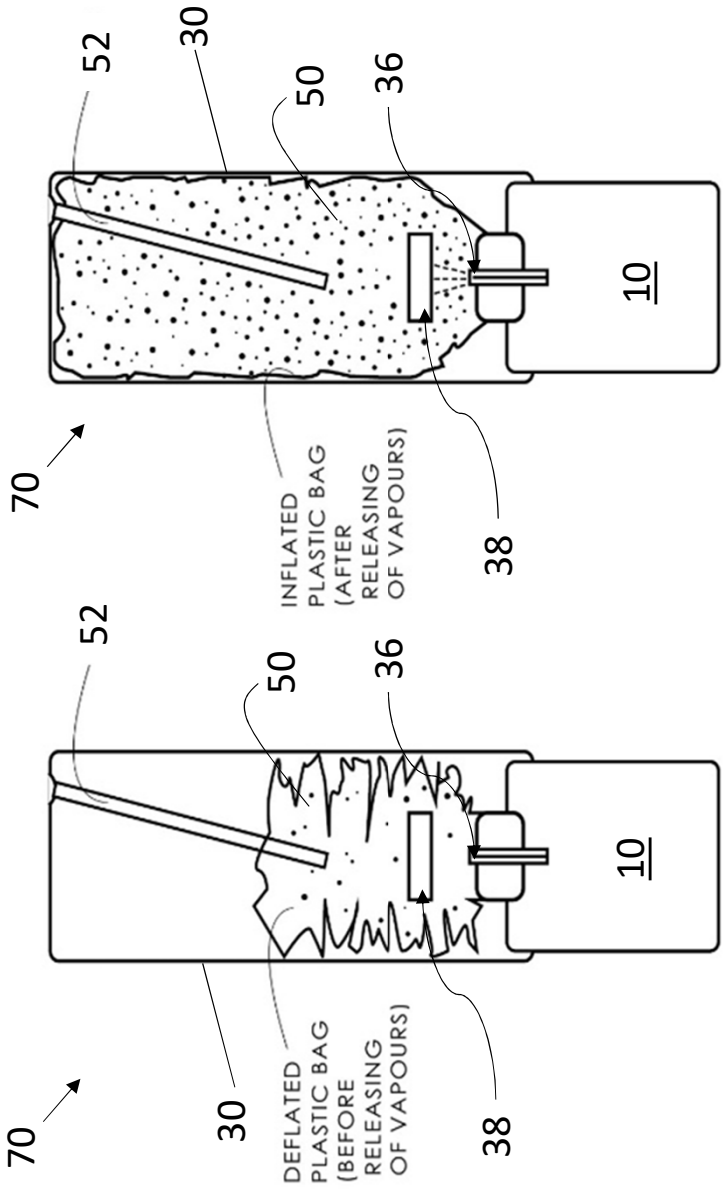
52
30
50
36
10
70
INFLATED PLASTIC BAG (AFTER RELEASING OF VAPOURS)
38
52
50
36
10
70
30
DEFLATED PLASTIC BAG (BEFORE RELEASING OF VAPOURS)
38

FIG 7b

FIG 7a

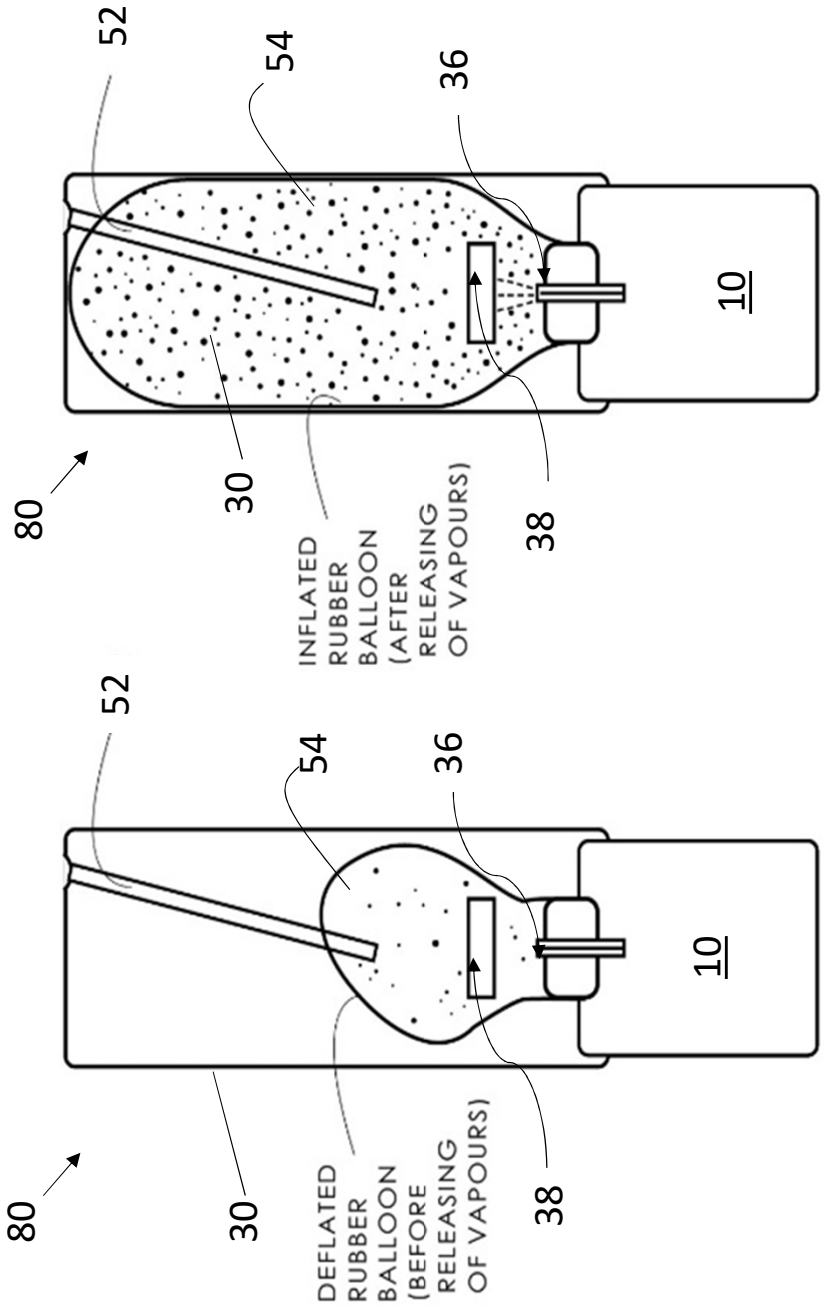
52
54
36
10
80
30
INFLATED RUBBER BALLOON (AFTER RELEASING OF VAPOURS)
38
52
54
36
10
80
30
DEFLATED RUBBER BALLOON (BEFORE RELEASING OF VAPOURS)
38

FIG 8b

FIG 8a