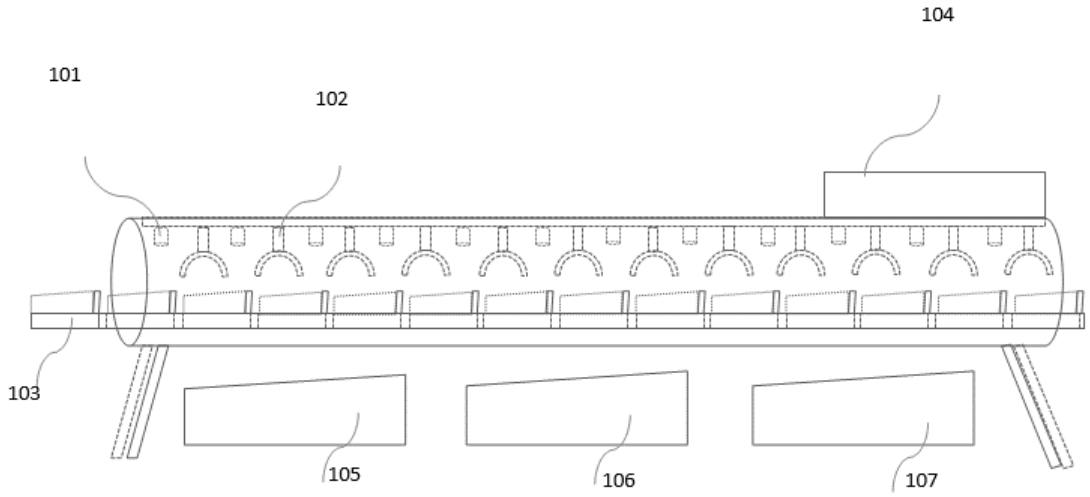

Figure 1 shows the sorting of large waste materials.

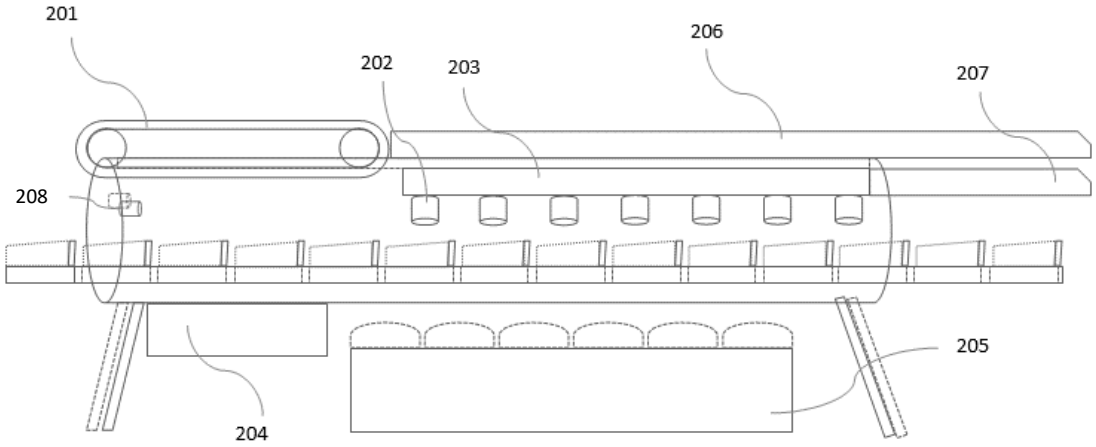

Figure 2 shows the sorting of ferrous metals and non-ferrous metals.

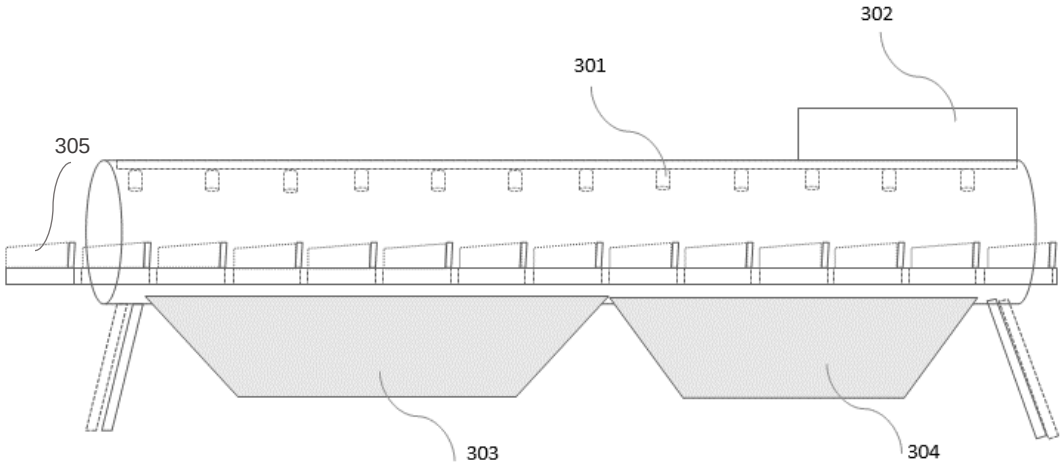

Figure 3 shows the sorting of thin film waste, low density or low weight plastics and other plastics.

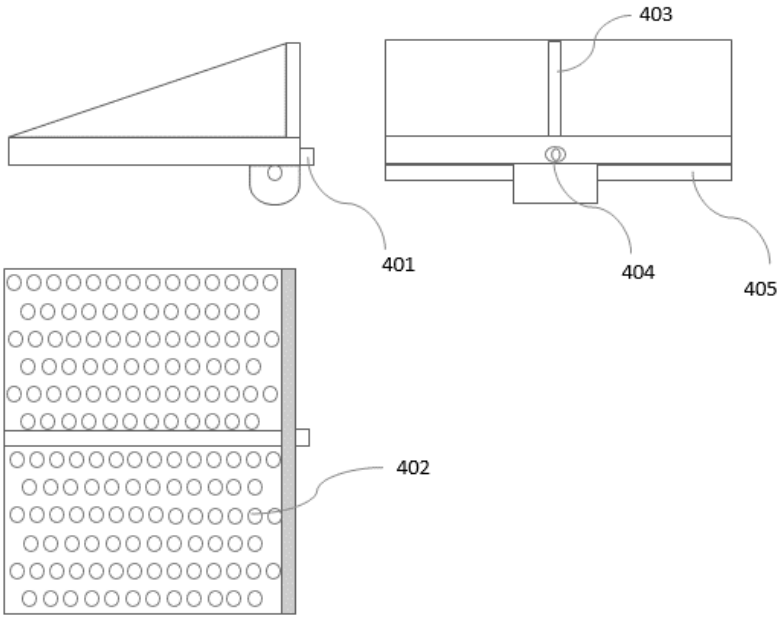

Figure 4 shows the detailed view of the conveyor tray in Figure 1, 2 and 3.

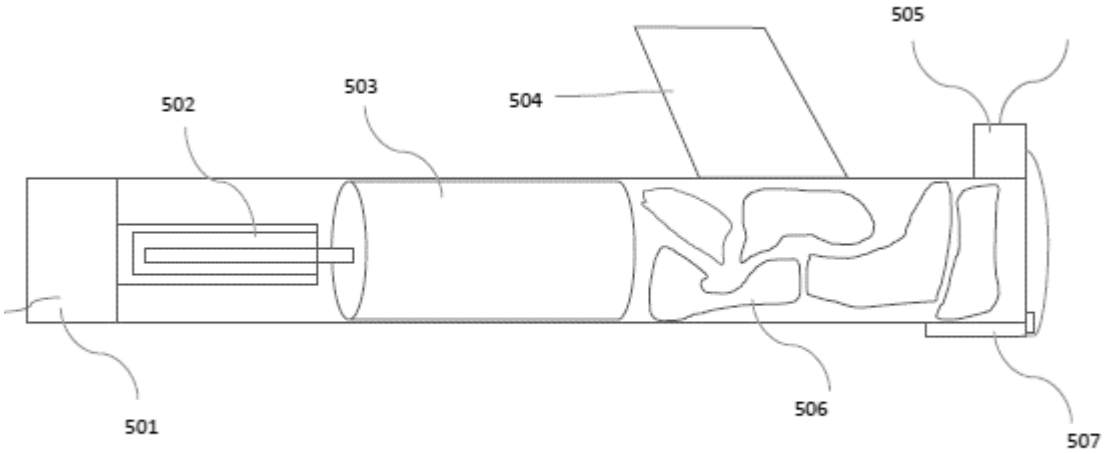

Figure 5A shows the overview of the thin film waste and the low density or low weight plastics processing stage.

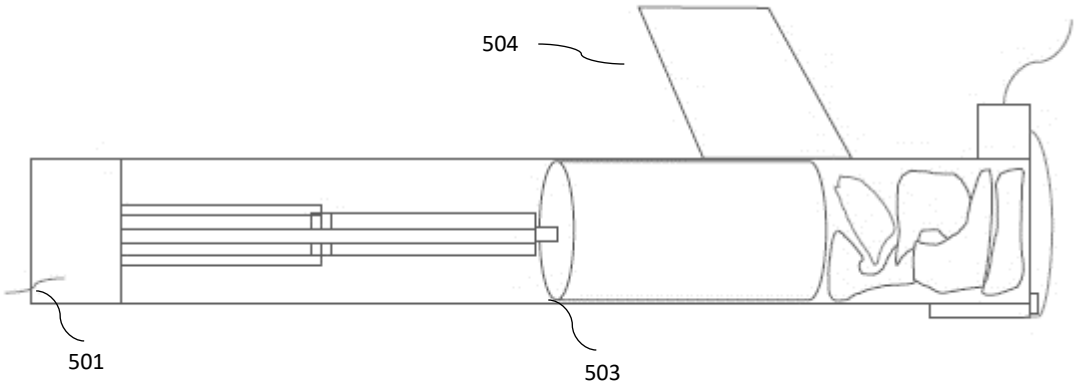

Figure 5B shows the thin film waste and the low density or low weight plastics being compressed.

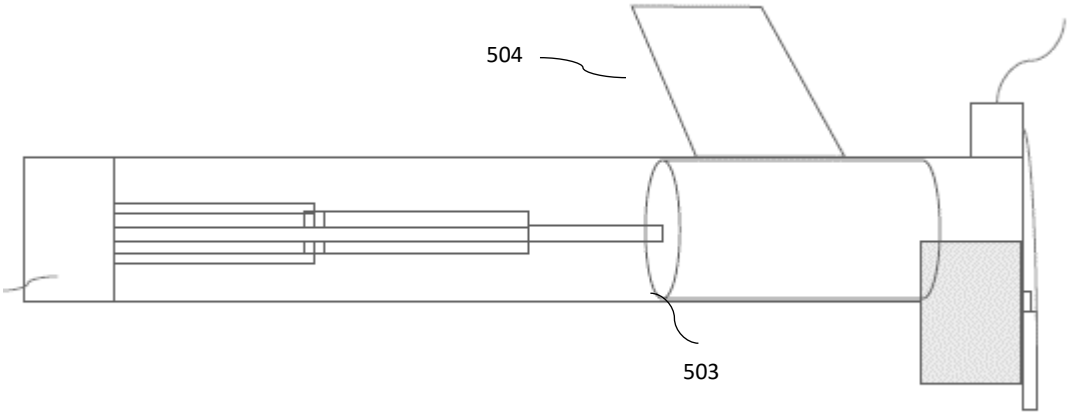

Figure 5C shows the elongation stage of the hydraulic piston rod to compress the plastic input.

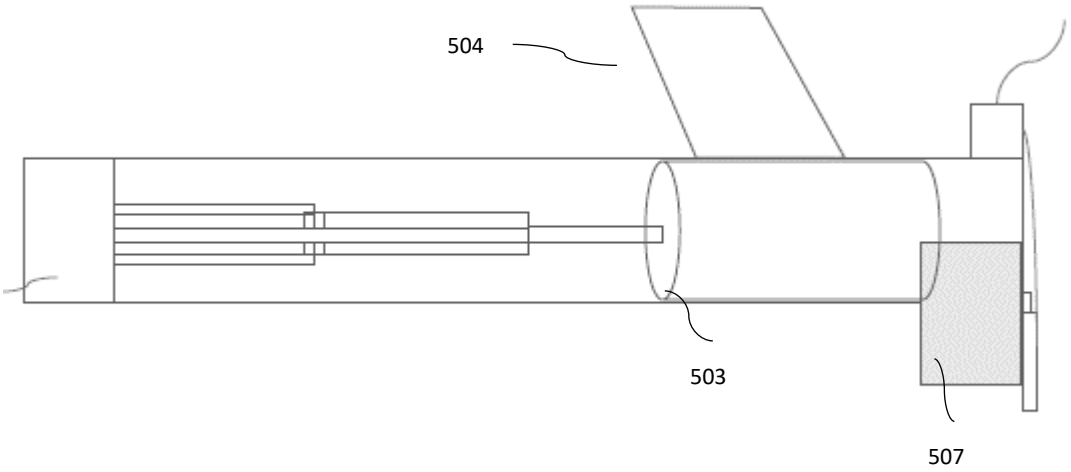

Figure 5D shows the output of the plastic cubes extracted from the output door.

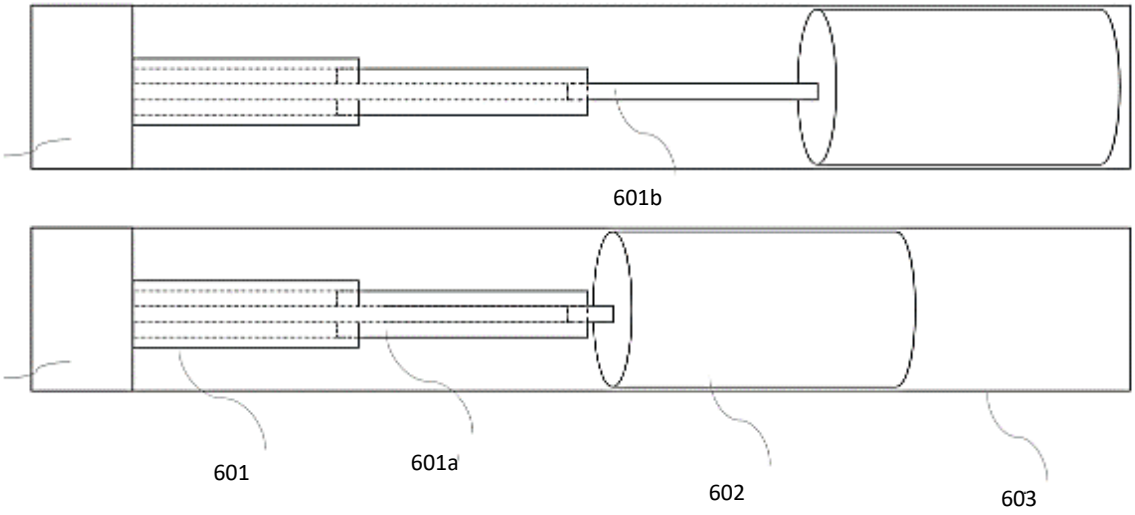

Figure 6 shows a detailed view of elongation of the hydraulic piston rod to compress the plastic waste.

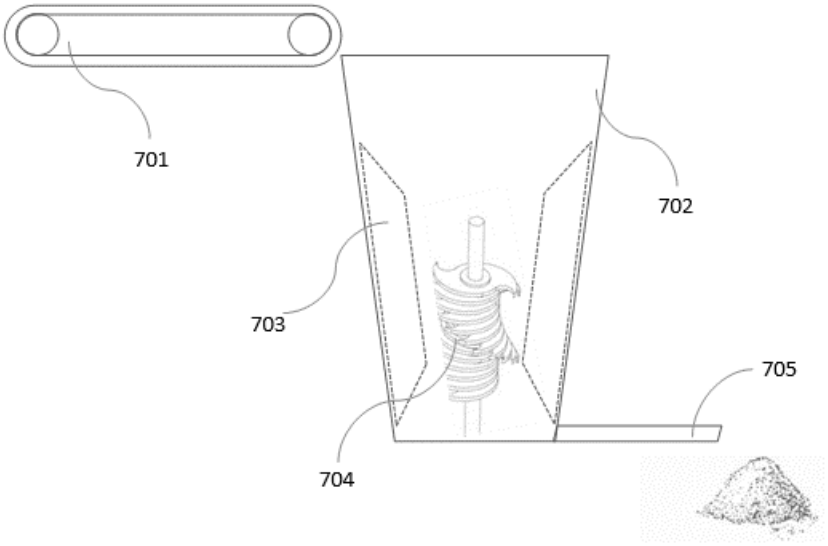

Figure 7 shows the granulation chamber for plastic & thin film, paper, cardboard, and organic waste.

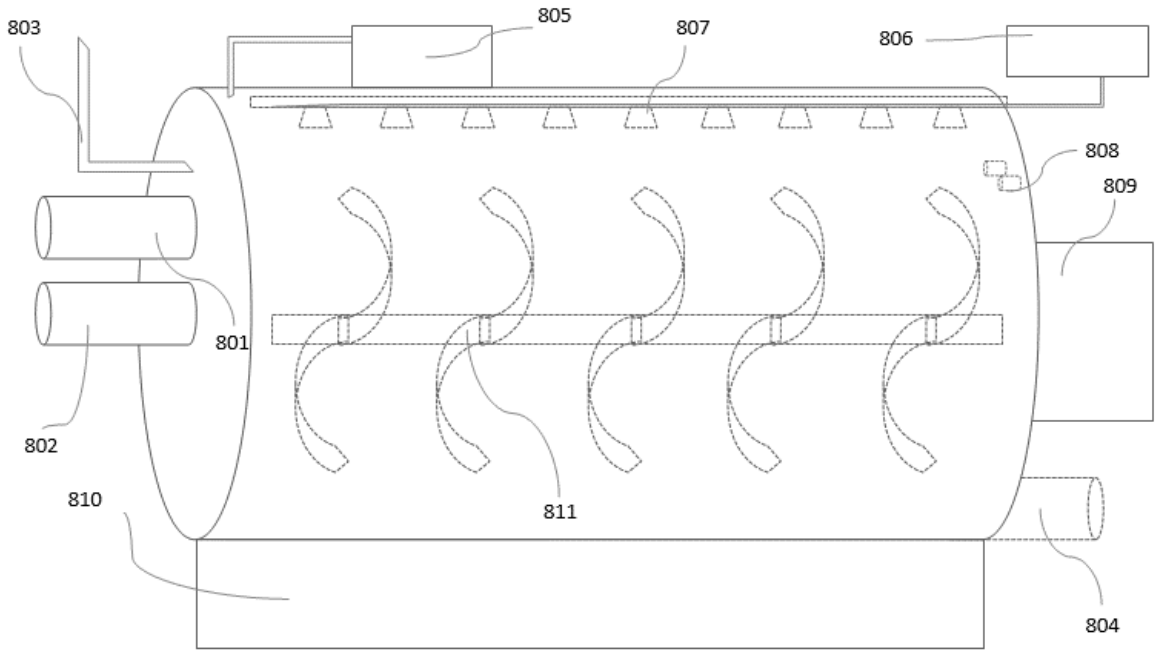

Figure 8 shows the acetogenic chamber.

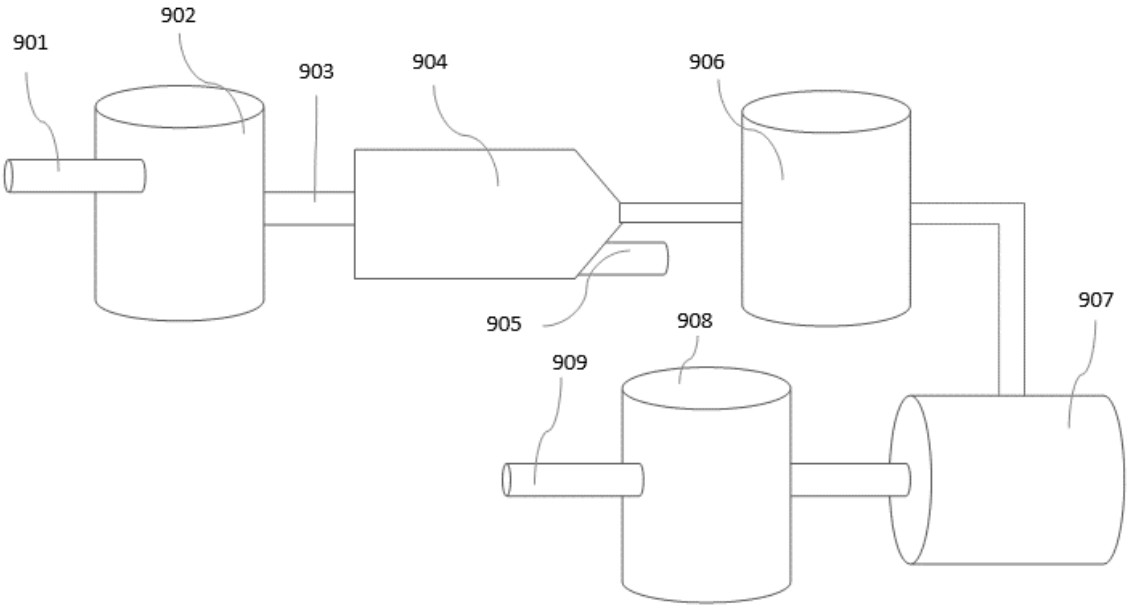

Figure 9 shows the cellulose based plastic extraction from solid and liquid accumulation.

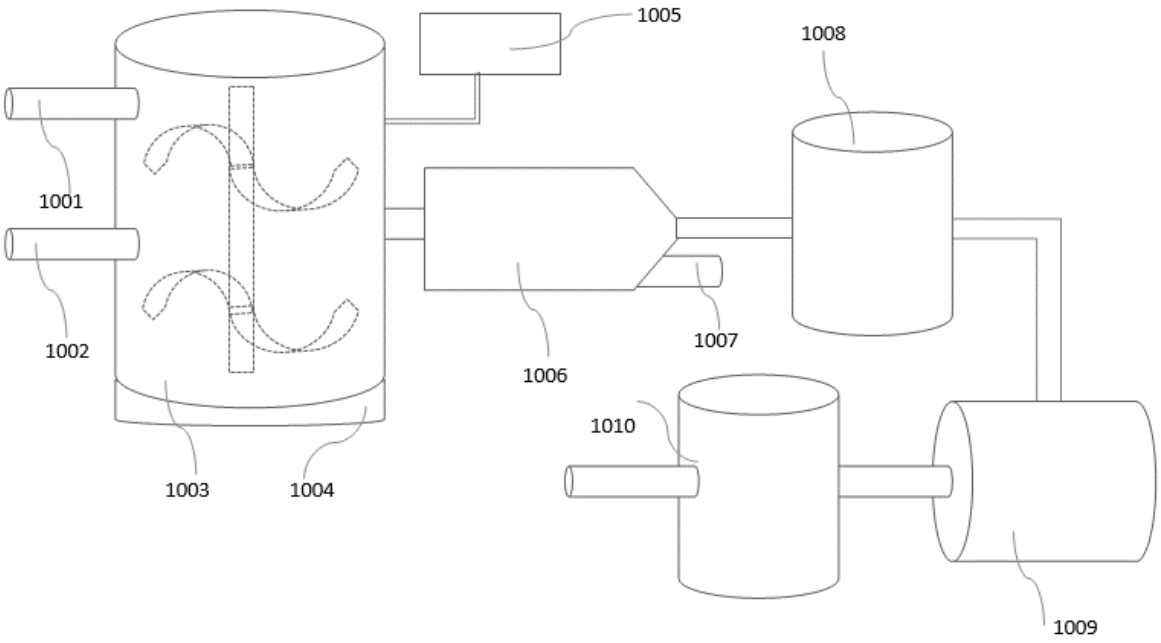

Figure 10 shows the cellulose based plastic extraction from gaseous accumulation.