PCT

WORLD INTELLECTUAL PROPERTY ORGANIZATION
International Bureau

IPO5
20000474G-4

INTERNATIONAL APPLICATION PUBLISHED UNDER THE PATENT COOPERATION TREATY (PCT)

(51) International Patent Classification 6 :
B08B 3/02

A1

(11) International Publication Number: WO 99/46065

(43) International Publication Date: 16 September 1999 (16.09.99)

(21) International Application Number: PCT/US99/05676

(22) International Filing Date: 15 March 1999 (15.03.99)

(30) Priority Data:

09/041,901	13 March 1998 (13.03.98)	US
09/041,649	13 March 1998 (13.03.98)	US
09/113,435	10 July 1998 (10.07.98)	US
60/116,750	22 January 1999 (22.01.99)	US
60/117,474	27 January 1999 (27.01.99)	US

(81) Designated States: CN, JP, KR, SG, US, European patent (AT, BE, CH, CY, DE, DK, ES, FI, FR, GB, GR, IE, IT, LU, MC, NL, PT, SE).

Published
With international search report.

(71) Applicant *(for all designated States except US)*: SEMITOOL, INC. [US/US]; 655 Reserve Drive, Kalispell, MT 59901 (US).

(72) Inventors; and
(75) Inventors/Applicants *(for US only)*: CURTIS, Gary, L. [US/US]; 655 Hoffman Draw, Kalispell, MT 59901 (US). THOMPSON, Raymon, F. [US/US]; 286 Buffalo Hill Drive, Kalispell, MT 59901 (US). PEACE, Steven, L. [US/US]; 745 Hidden Valley Drive, Whitefish, MT 59937 (US).

(74) Agent: ERICKSON, Randall, T.; Rockey, Milnamow & Katz, Ltd., 47th floor, Two Prudential Plaza, 180 North Stetson, Chicago, IL 60601 (US).

(54) Title: MICRO-ENVIRONMENT REACTOR FOR PROCESSING A MICROELECTRONIC WORKPIECE

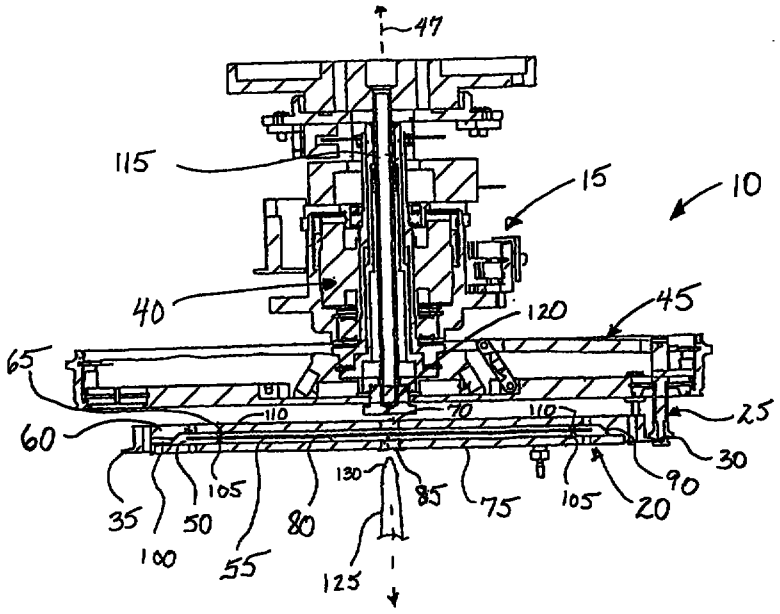

(57) Abstract

An apparatus (10) for processing a workpiece (55) in a micro-environment is set forth. The apparatus includes a rotor motor (40) and a workpiece housing (20). The workpiece housing (20) is connected to be rotated by the rotor motor (40). The workpiece housing (20) further defines a substantially closed processing chamber (50) therein in which one or more processing fluids are distributed across at least one face of the workpiece (55) by centripetal accelerations generated during rotation of the housing (20). Various enhancements to the apparatus and processes using the apparatus are also set forth.