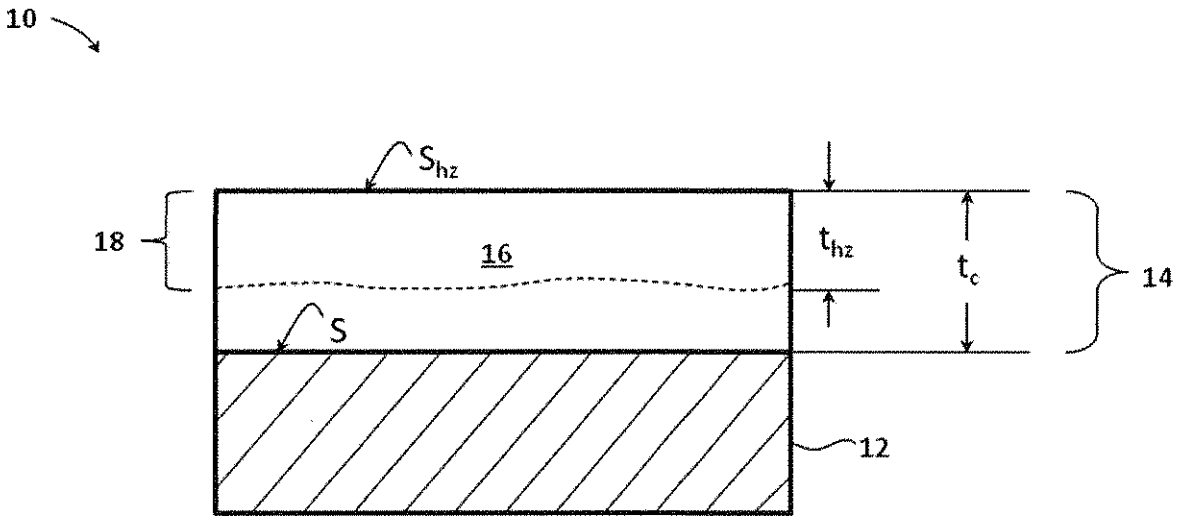

Fig-1

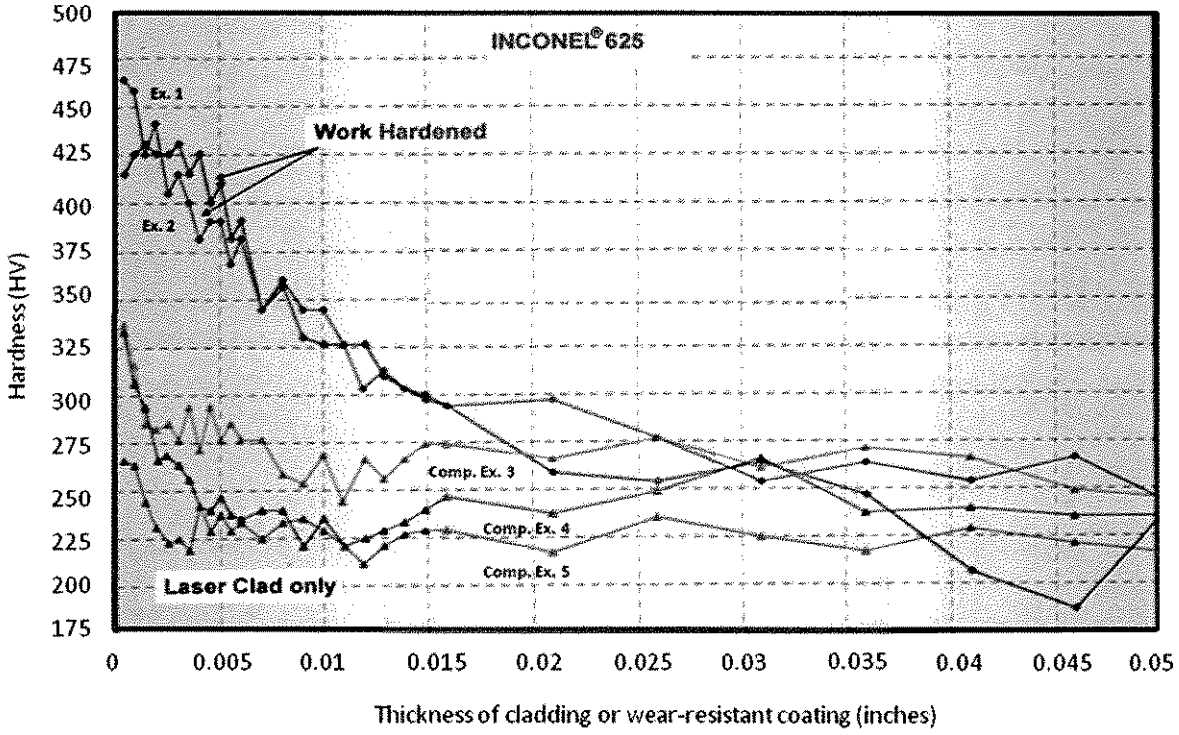
INCONEL® 625
Work Hardened
Ex. 1
Ex. 2
Comp. Ex. 3
Comp. Ex. 4
Comp. Ex. 5
Laser Clad only
Hardness (HV)
500
475
450
425
400
375
350
325
300
275
250
225
200
175
0
0.005
0.01
0.015
0.02
0.025
0.03
0.035
0.04
0.045
0.05
Thickness of cladding or wear-resistant coating (inches)

Fig-2