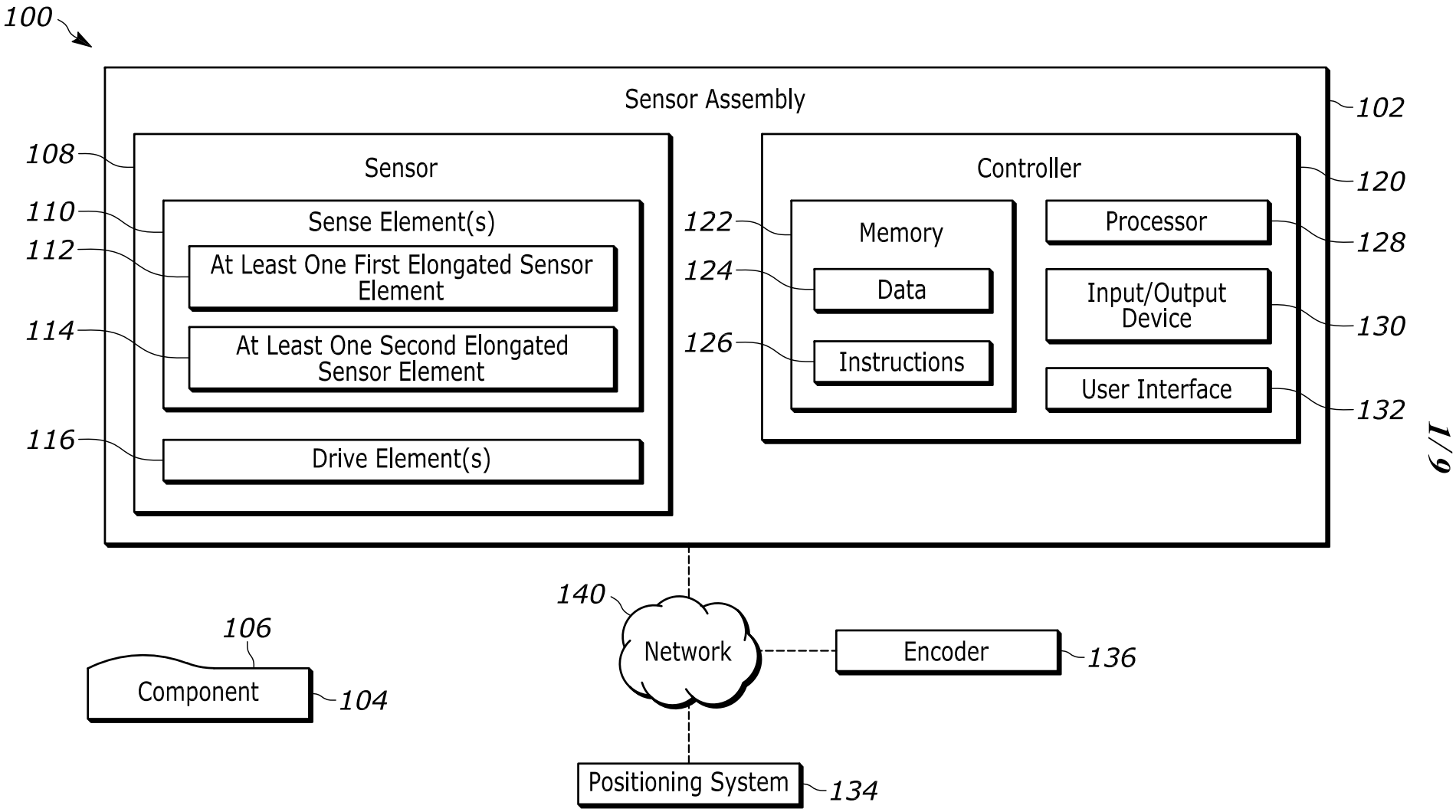
100
Sensor Assembly
102
108
Sensor
110
Sense Element(s)
112
At Least One First Elongated Sensor Element
114
At Least One Second Elongated Sensor Element
116
Drive Element(s)
Controller
120
122
Memory
124
Data
126
Instructions
Processor
128
Input/Output Device
130
User Interface
132
1/9
140
Network
Encoder
136
106
Component
104
Positioning System
134

FIG. 1

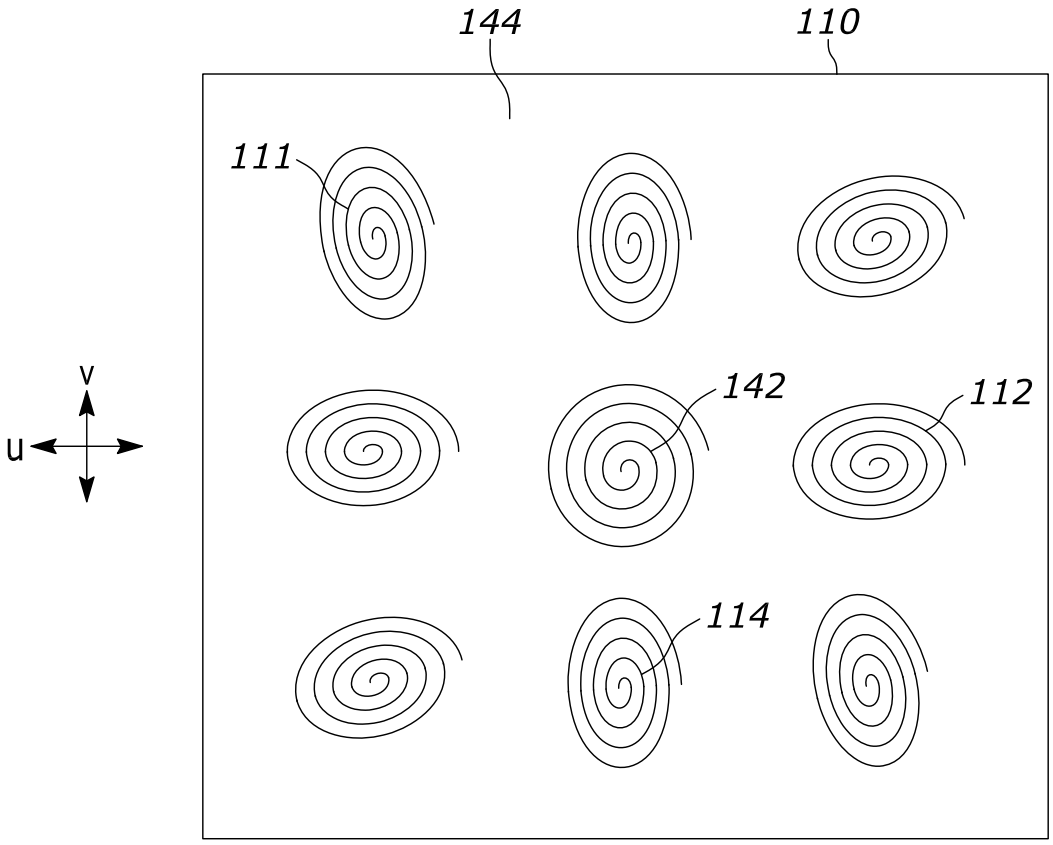

FIG. 2

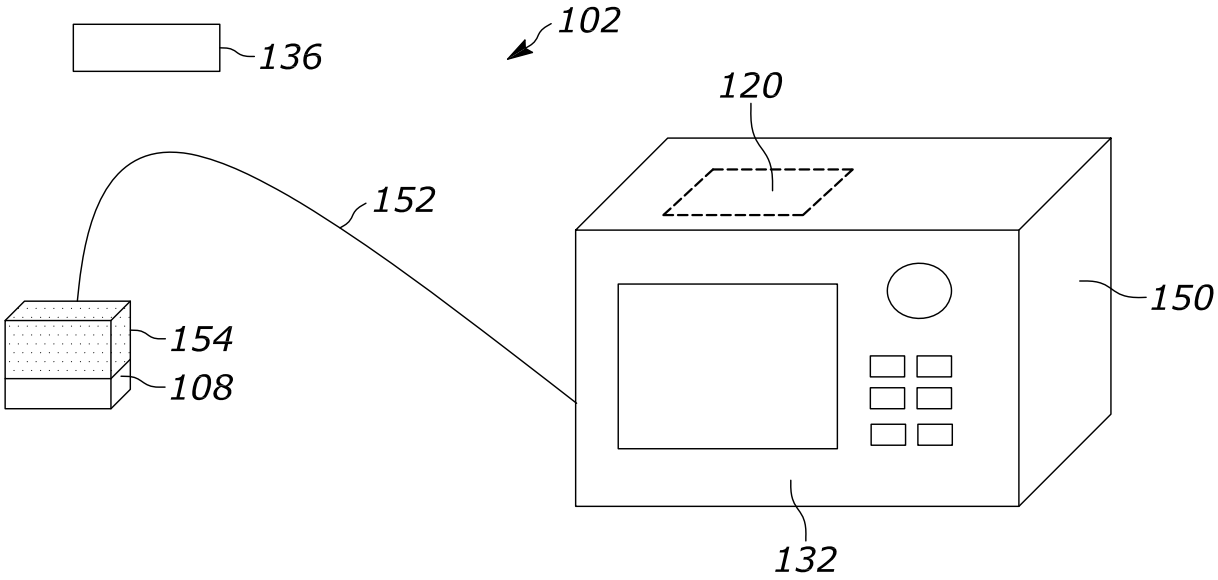

FIG. 3

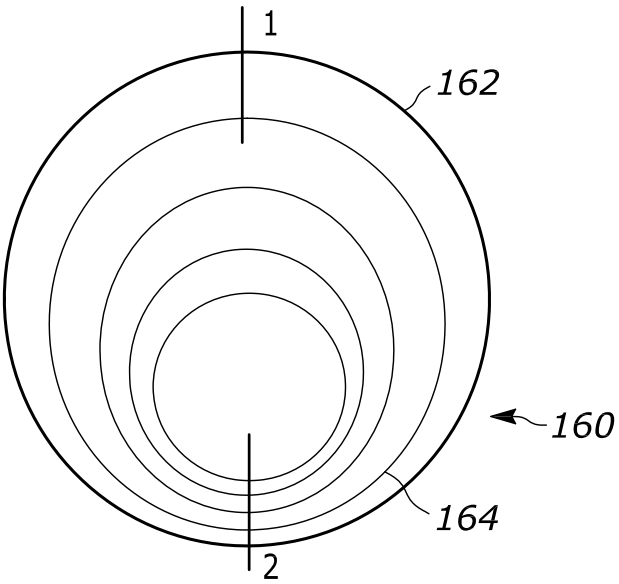

FIG. 4

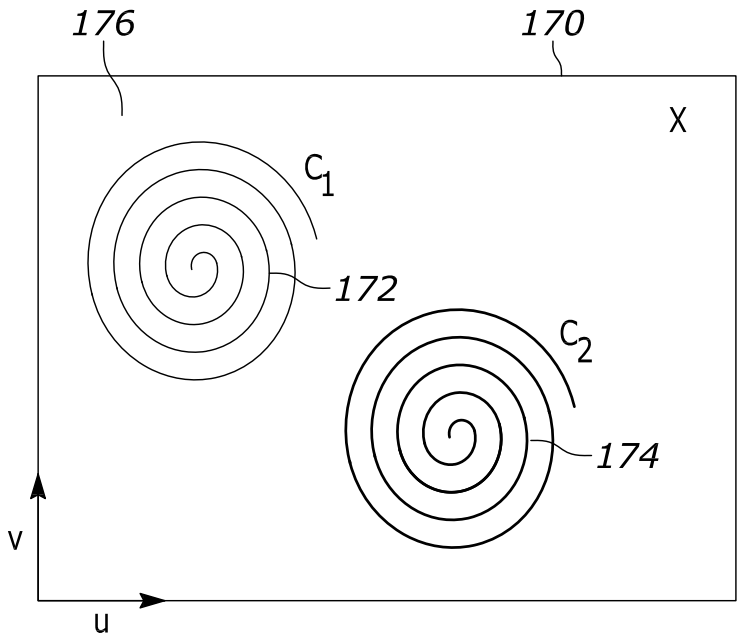

FIG. 5A

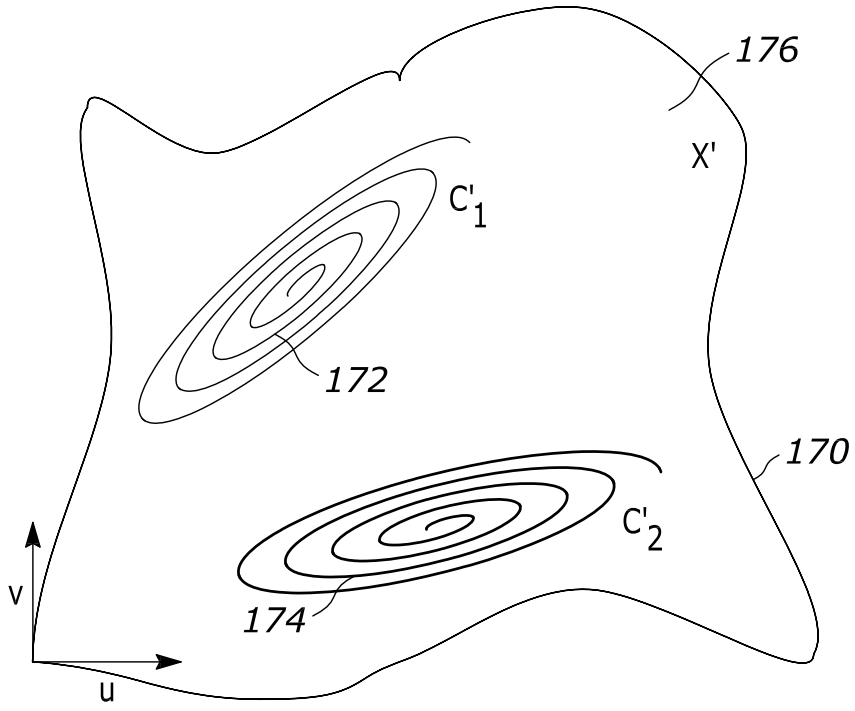

FIG. 5B

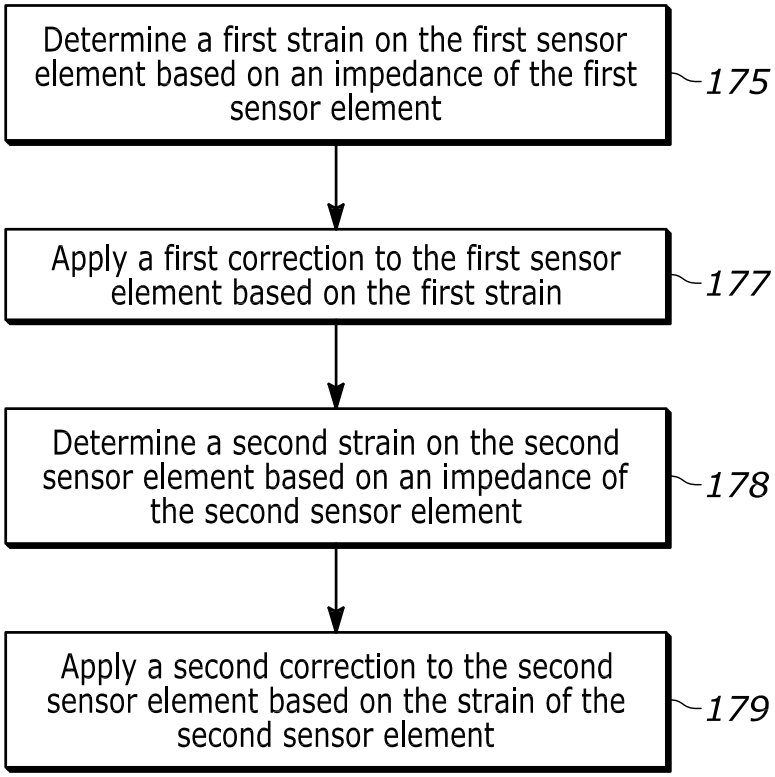
Determine a first strain on the first sensor element based on an impedance of the first sensor element
175
Apply a first correction to the first sensor element based on the first strain
177
Determine a second strain on the second sensor element based on an impedance of the second sensor element
178
Apply a second correction to the second sensor element based on the strain of the second sensor element
179

FIG. 5C

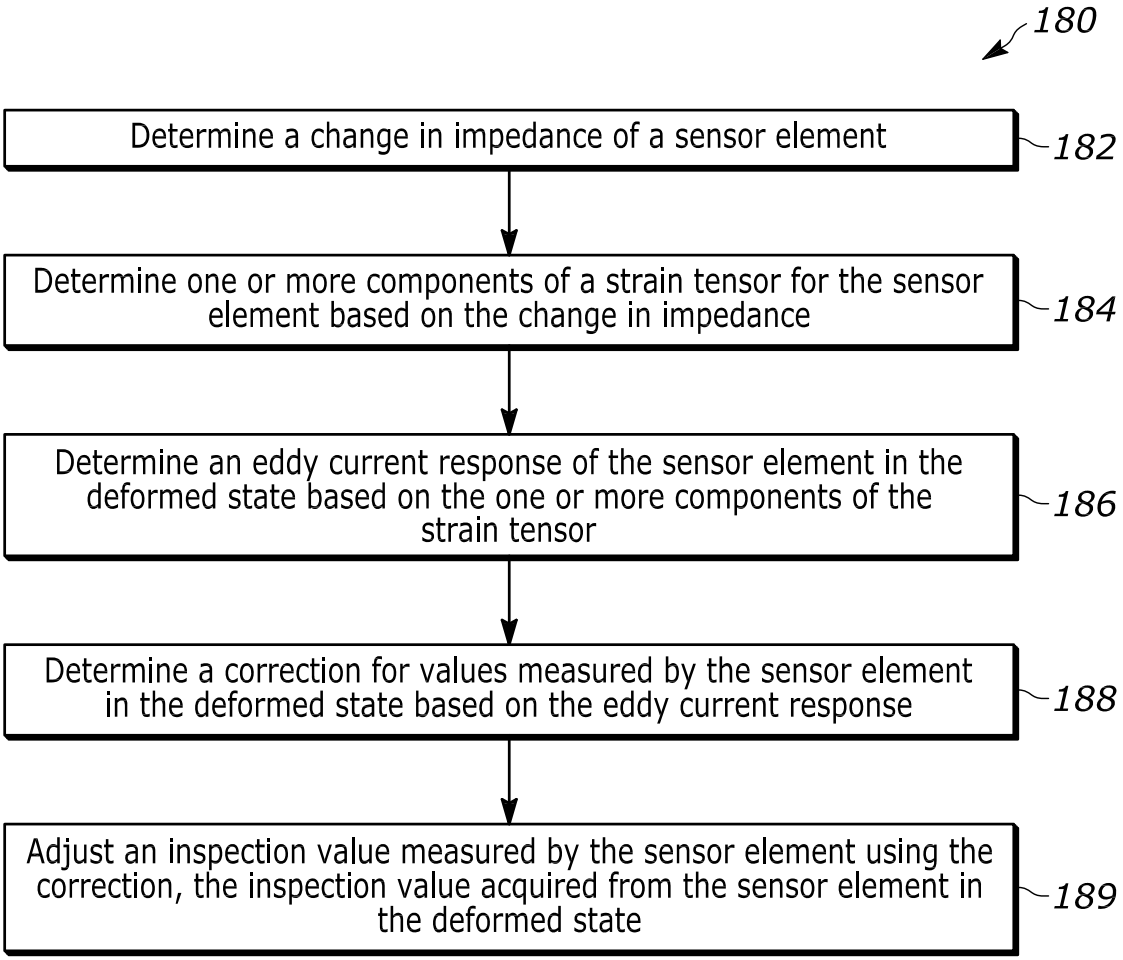
180
Determine a change in impedance of a sensor element
182
Determine one or more components of a strain tensor for the sensor element based on the change in impedance
184
Determine an eddy current response of the sensor element in the deformed state based on the one or more components of the strain tensor
186
Determine a correction for values measured by the sensor element in the deformed state based on the eddy current response
188
Adjust an inspection value measured by the sensor element using the correction, the inspection value acquired from the sensor element in the deformed state
189

FIG. 6

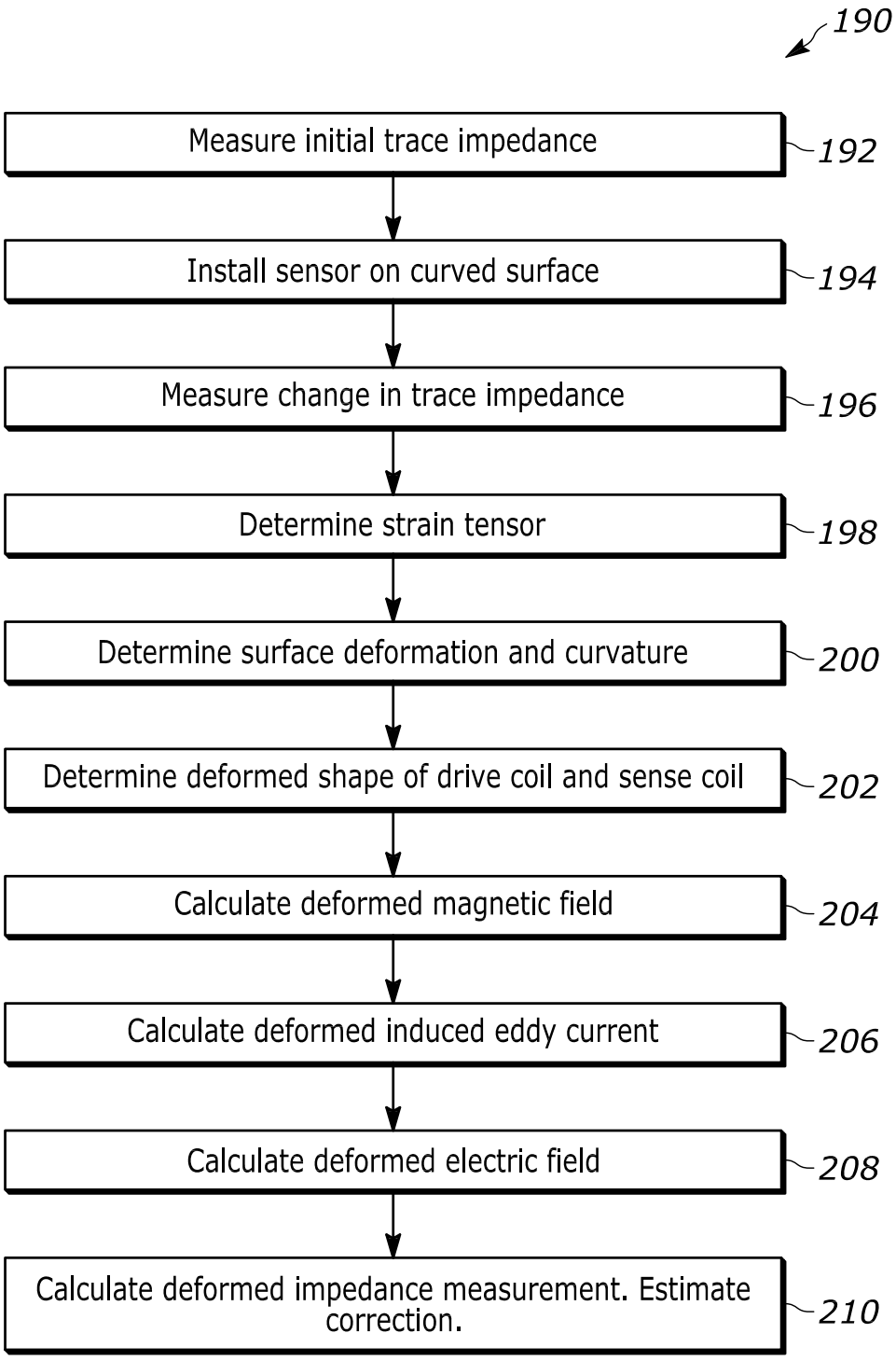
190
Measure initial trace impedance
192
Install sensor on curved surface
194
Measure change in trace impedance
196
Determine strain tensor
198
Determine surface deformation and curvature
200
Determine deformed shape of drive coil and sense coil
202
Calculate deformed magnetic field
204
Calculate deformed induced eddy current
206
Calculate deformed electric field
208
Calculate deformed impedance measurement. Estimate correction.
210

FIG. 7

Equation 1 $\epsilon_i = \frac{\Delta R_i}{R_i(1+2v)}$

Equation 2 $g_{ij} = \frac{\partial X}{\partial u^i} \cdot \frac{\partial X}{\partial u^j}$

Equation 3 $\epsilon_{ij} = \frac{1}{2} \nabla_i u_j + \nabla_j u_i + u^k \Gamma^l_{ij} g_{kl}$ (Solve For u)

Equation 4 $\Gamma^k_{ij} = \frac{1}{2} g^{kl} (\partial g_{il}/\partial x^j + \partial g_{jl}/\partial x^l - \partial g_{ij}/\partial x^l)$

Equation 5 $X'(u,v) = X(u,v) + u(u,v)\, N' = \frac{\frac{\partial X}{\partial u^1} \times \frac{\partial X}{\partial u^2}}{\left| \frac{\partial X}{\partial u^1} \times \frac{\partial X}{\partial u^2} \right|} K'_{ij} = -N' \cdot \frac{\partial^2 X'}{\partial u^i \partial u^j}$

Equation 6 $C'_1(u,v) = C_1(u,v) + \int K'_{ij}\, du\, dv$

Equation 7 $C'_2(u,v) = C_2(u,v) + \int K'_{ij}\, du\, dv$

$$V' = \int_{C_2} E' \cdot dl'$$

g_{ij}: Undeformed Metric Tensor

g'_{ij}: Deformed Metric Tensor, $g'_{ij} = g_{ij} + 2\epsilon_{ij}$

ϵ_{ij}: Strain Tensor

K_{ij}: Curvature Tensor

R_{ijkl}: Riemann Curvature Tensor

Γ^k_{ij}: Christoffel Symbol

X: Undeformed Sensor Shape Vector

X': Deformed Sensor Shape Vector

u, v: Coordinates

C_1: Undeformed Drive Coil Shape Vector

C_2: Undeformed Sense Coil Shape Vector

C'_1: Deformed Drive Coil Shape Vector

C'_2: Deformed Sensor Coil Shape Vector

FIG. 8

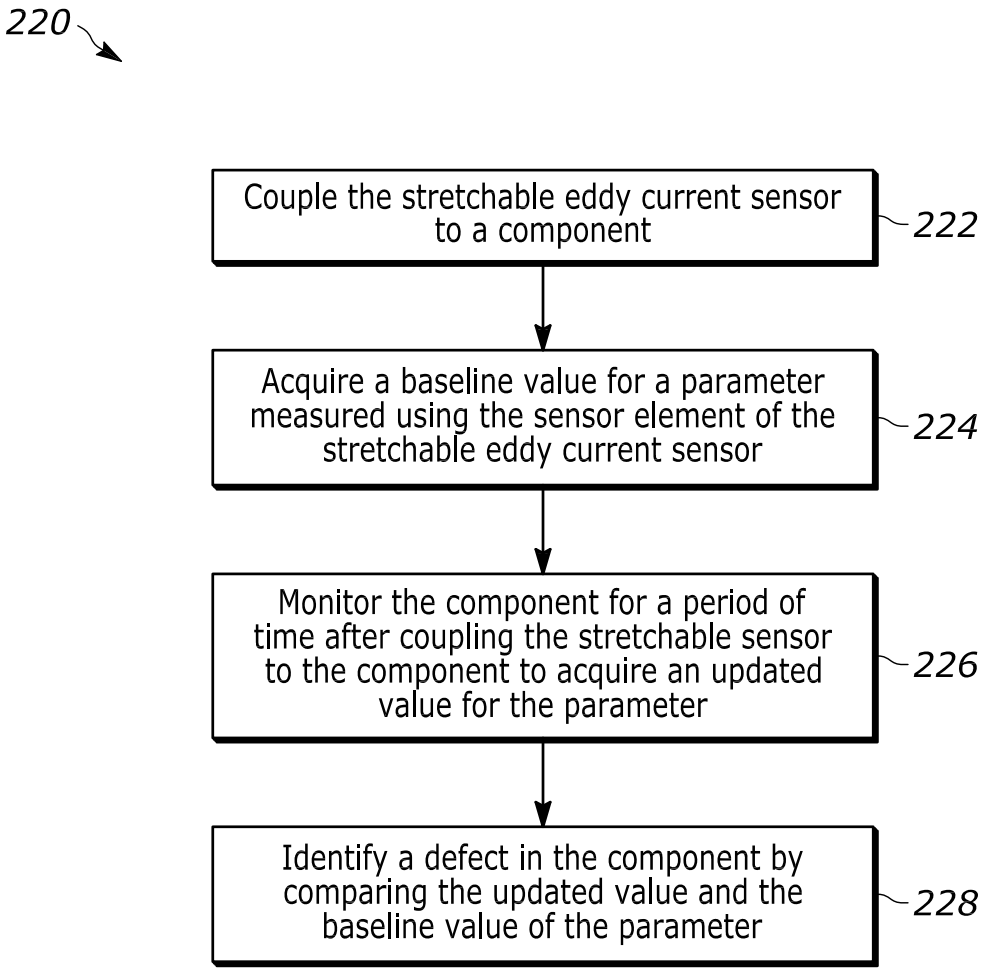
220
Couple the stretchable eddy current sensor to a component
222
Acquire a baseline value for a parameter measured using the sensor element of the stretchable eddy current sensor
224
Monitor the component for a period of time after coupling the stretchable sensor to the component to acquire an updated value for the parameter
226
Identify a defect in the component by comparing the updated value and the baseline value of the parameter
228

FIG. 9