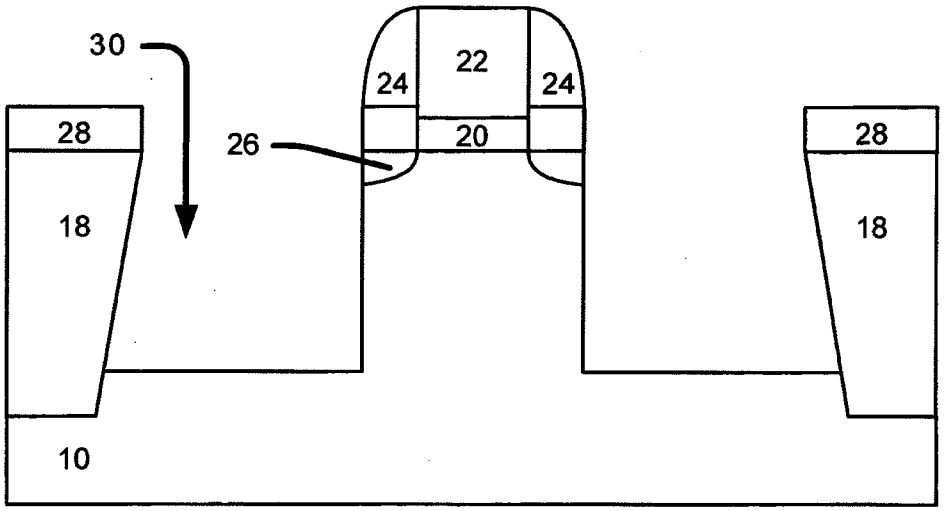

FIGURE 1A

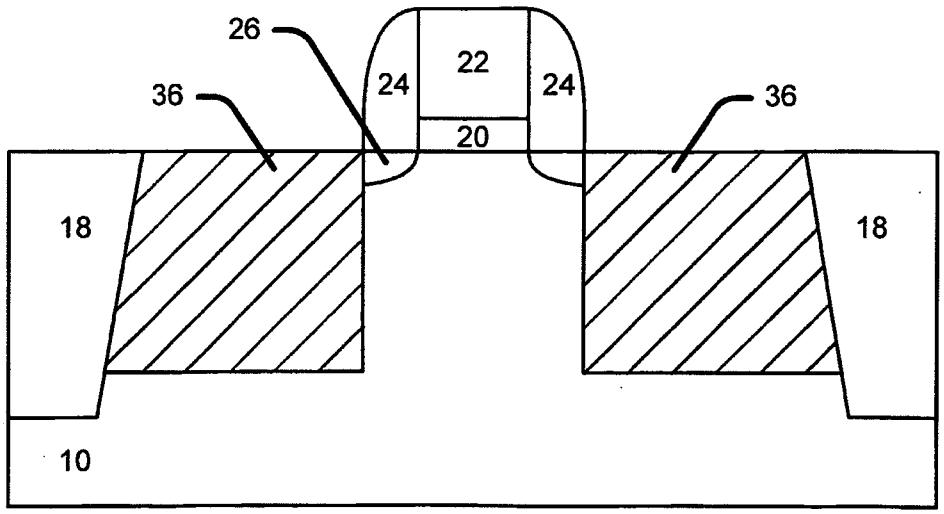

FIGURE 1B

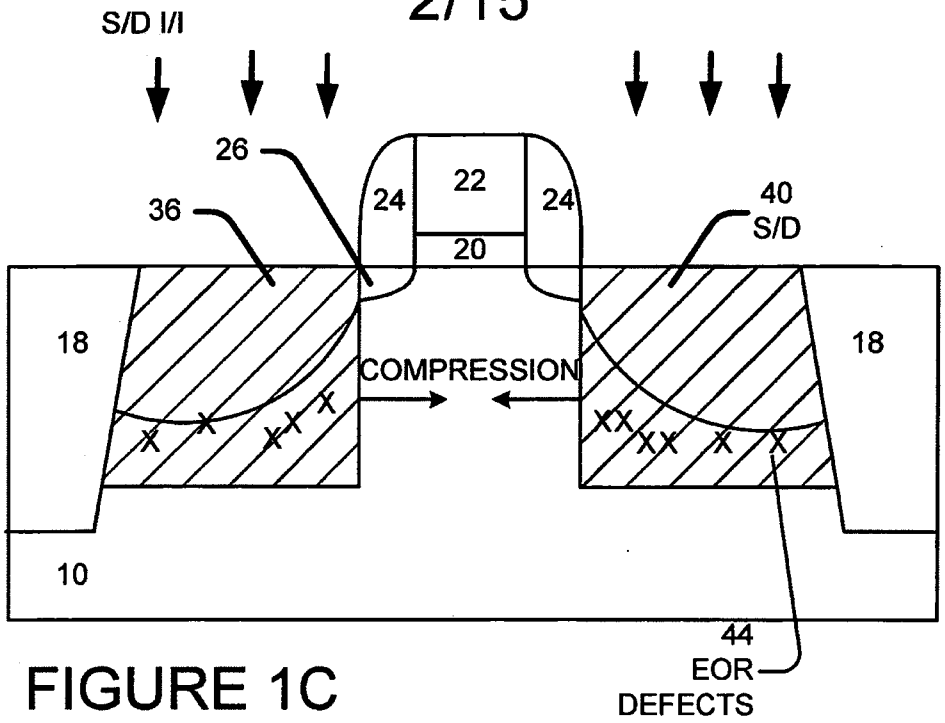

FIGURE 1C

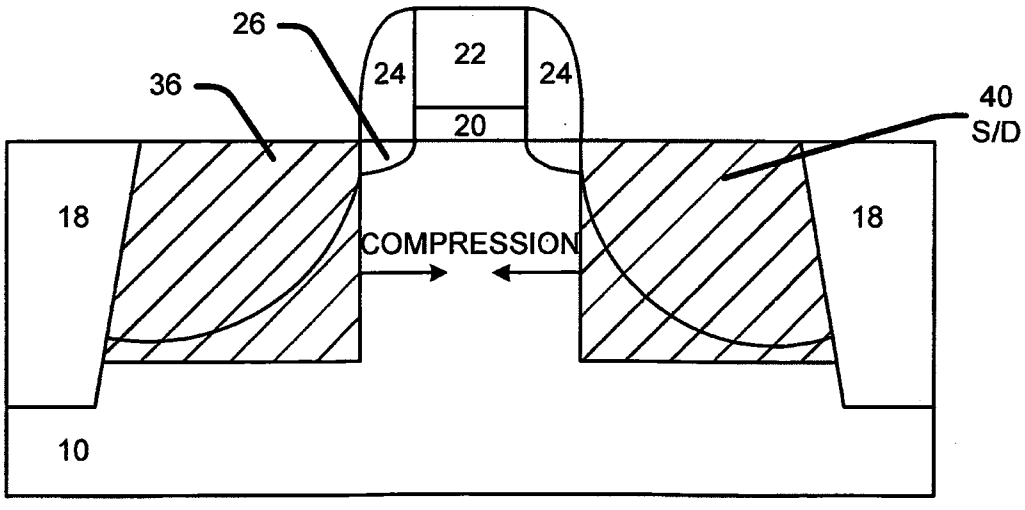

FIGURE 1D

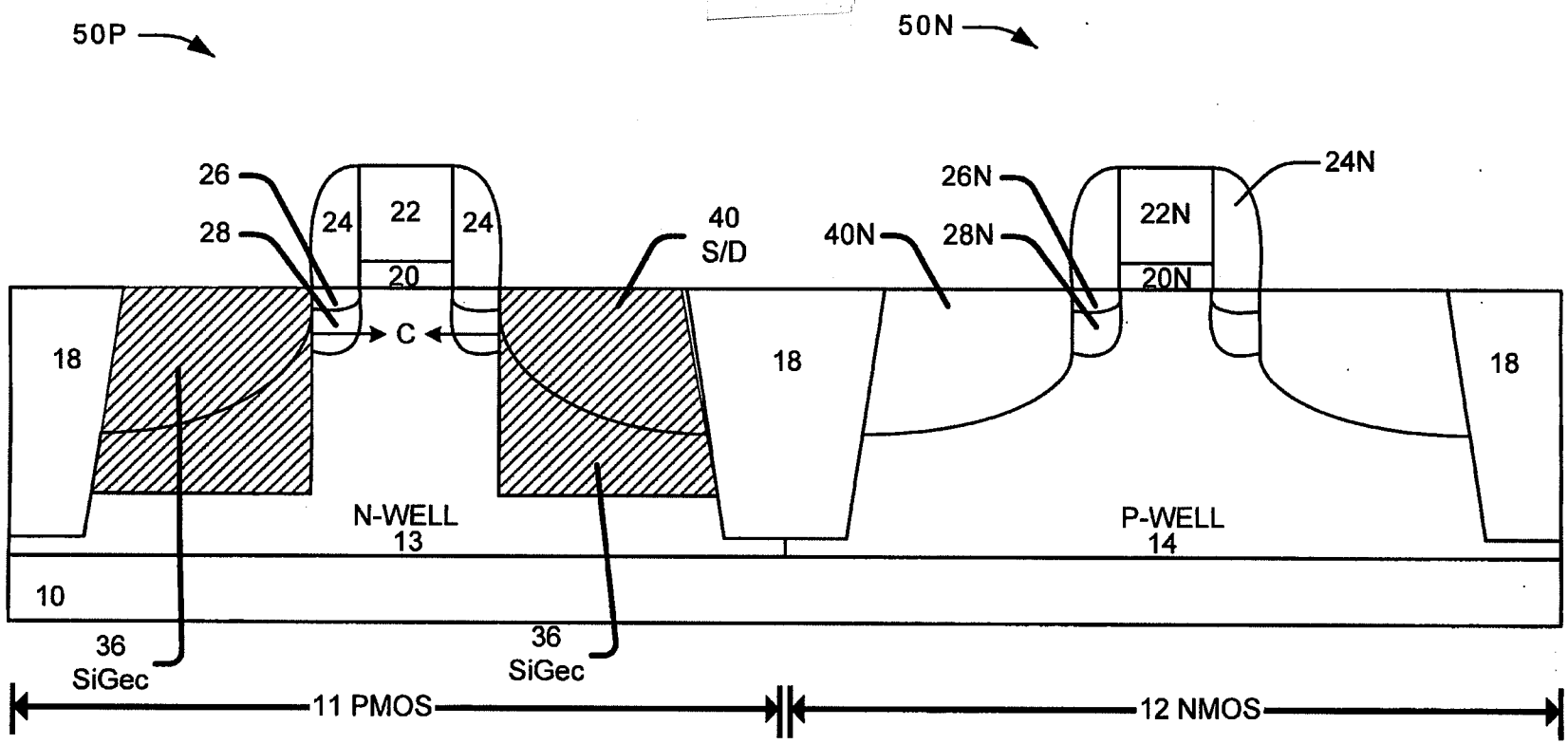
50P
50N
26
28
24
22
24
20
C
40
S/D
40N
26N
28N
22N
24N
20N
18
18
18
N-WELL
13
P-WELL
14
10
36
SiGec
36
SiGec
11 PMOS
12 NMOS

FIGURE 1E

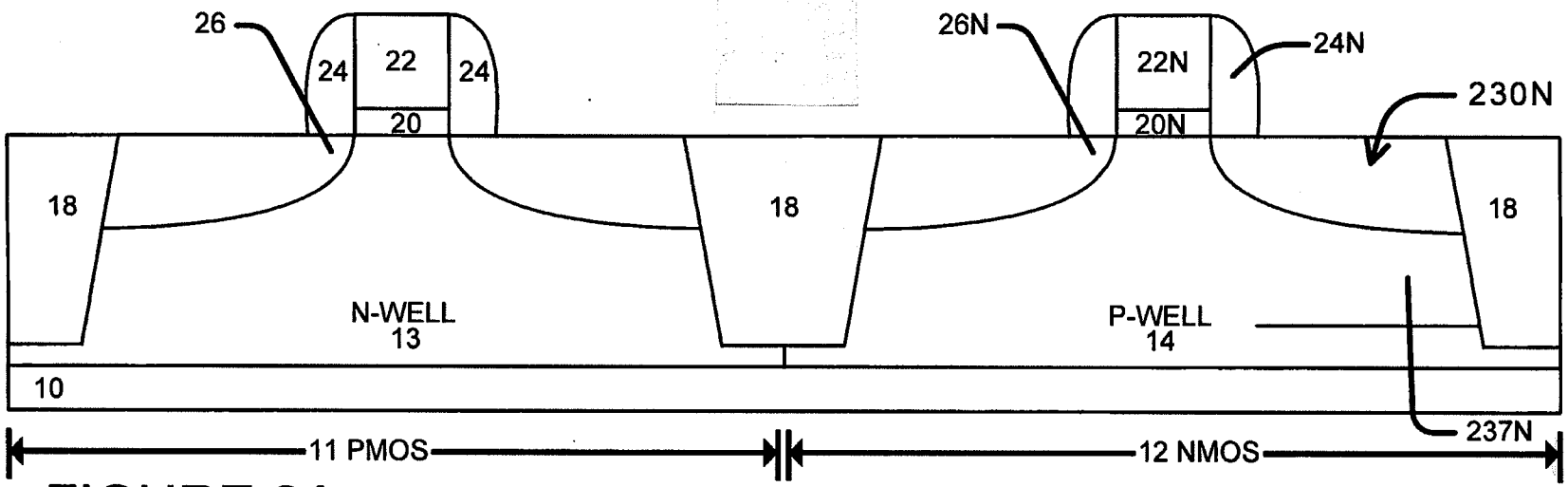

FIGURE 2A

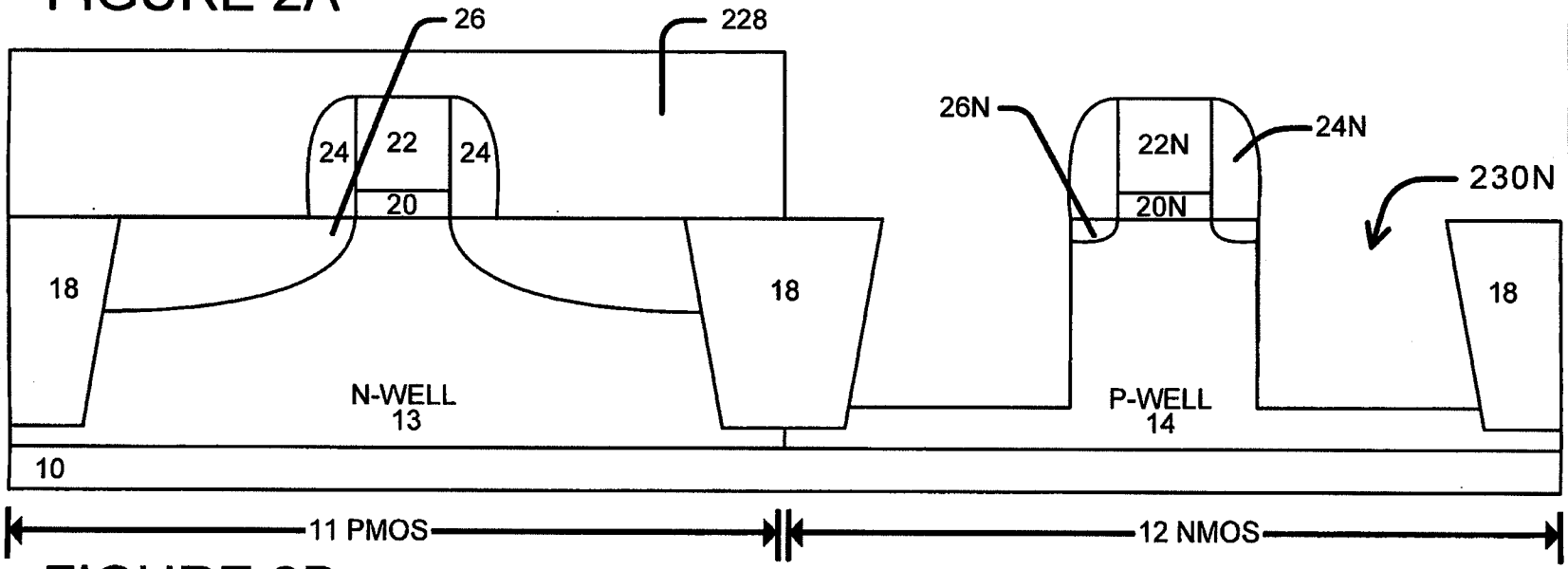

FIGURE 2B

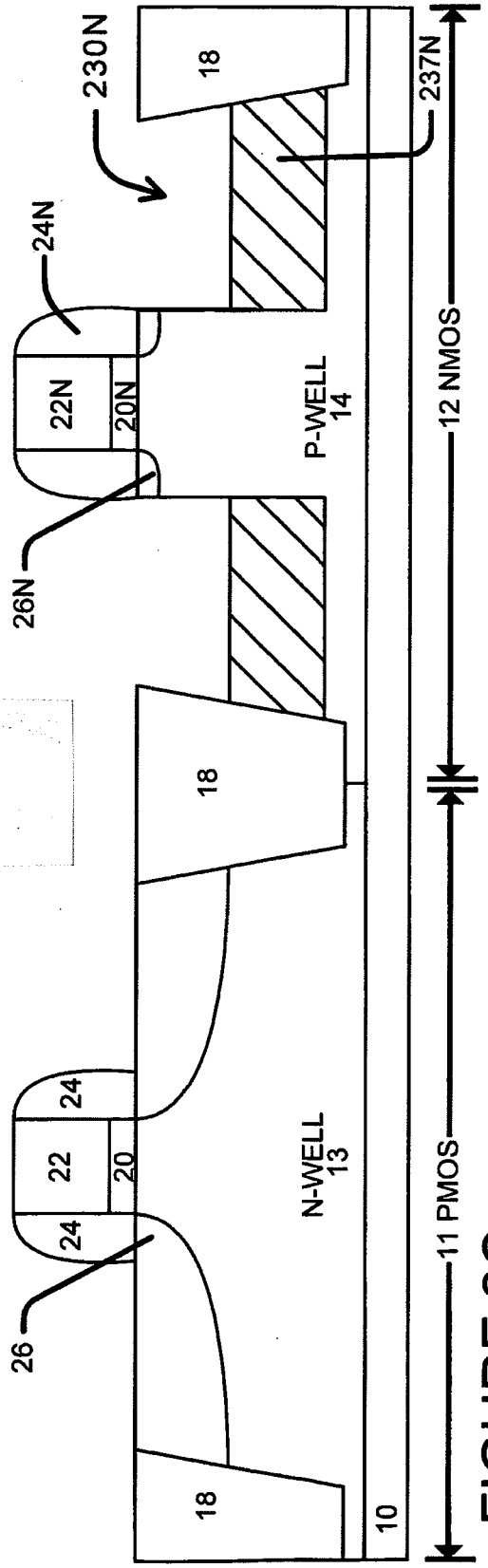

FIGURE 2C

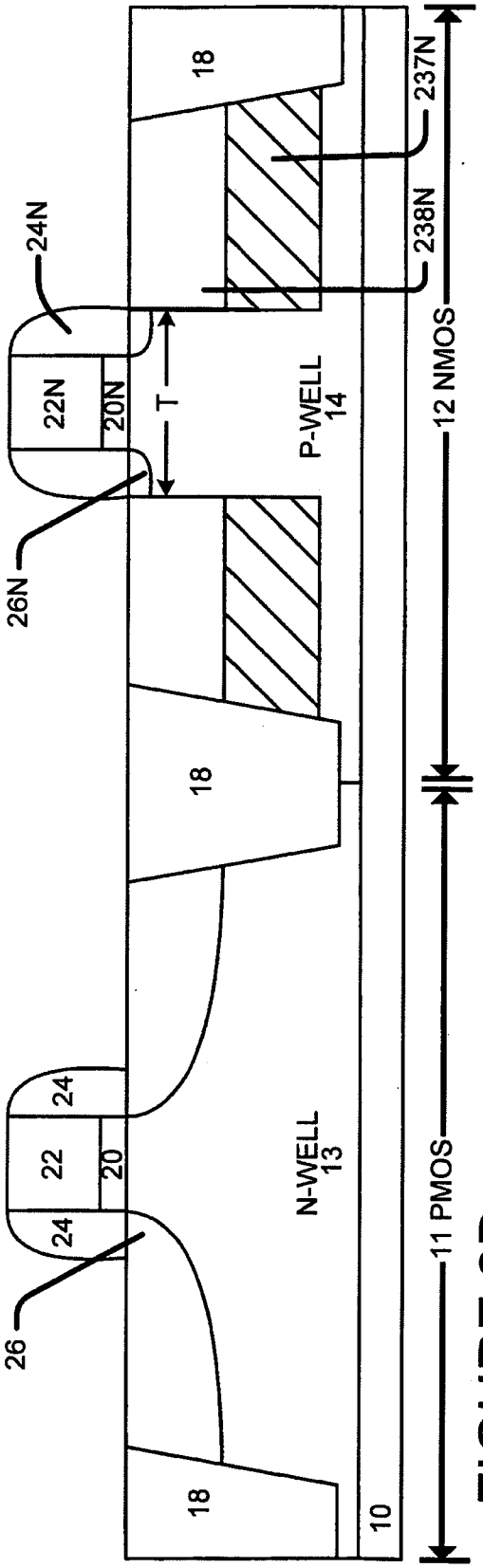

FIGURE 2D

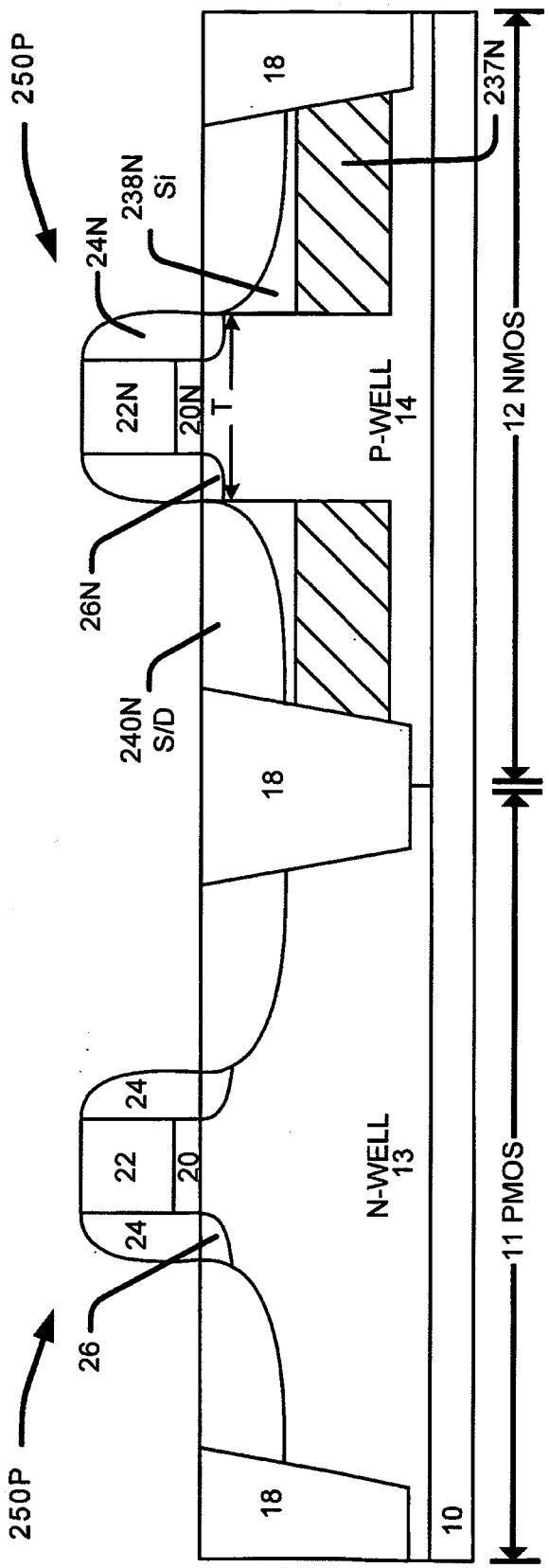
250P
24N
238N
Si
18
237N
22N
20N
T
P-WELL
14
12 NMOS
26N
240N
S/D
18
24
22
20
N-WELL
13
24
26
11 PMOS
250P
18
10

FIGURE 2E

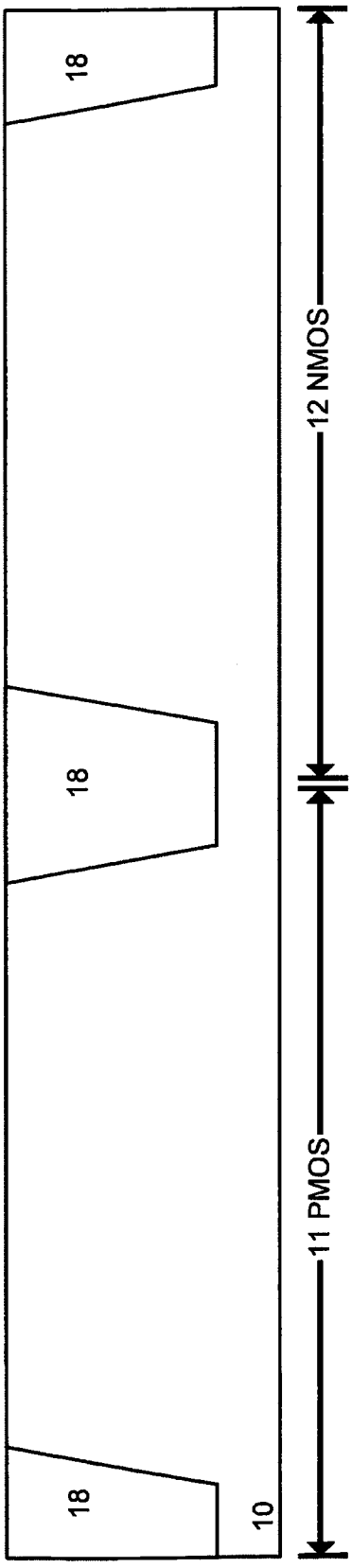

FIGURE 3A

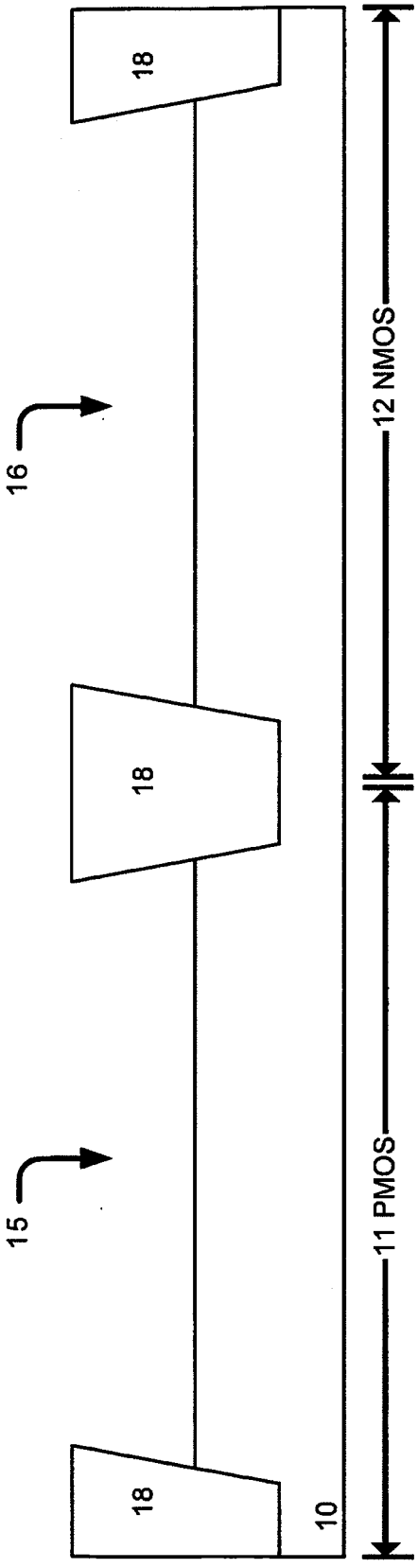

FIGURE 3B

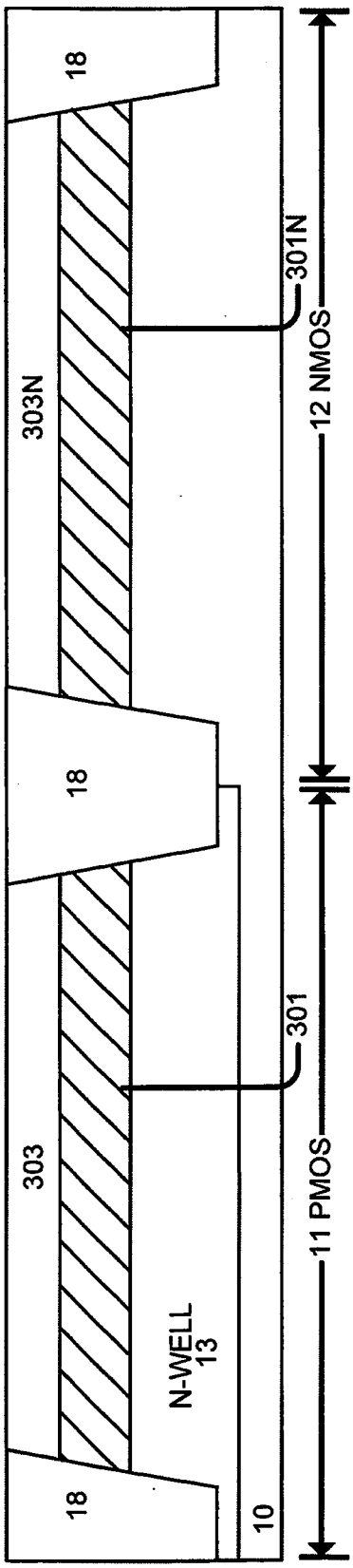

FIGURE 3C

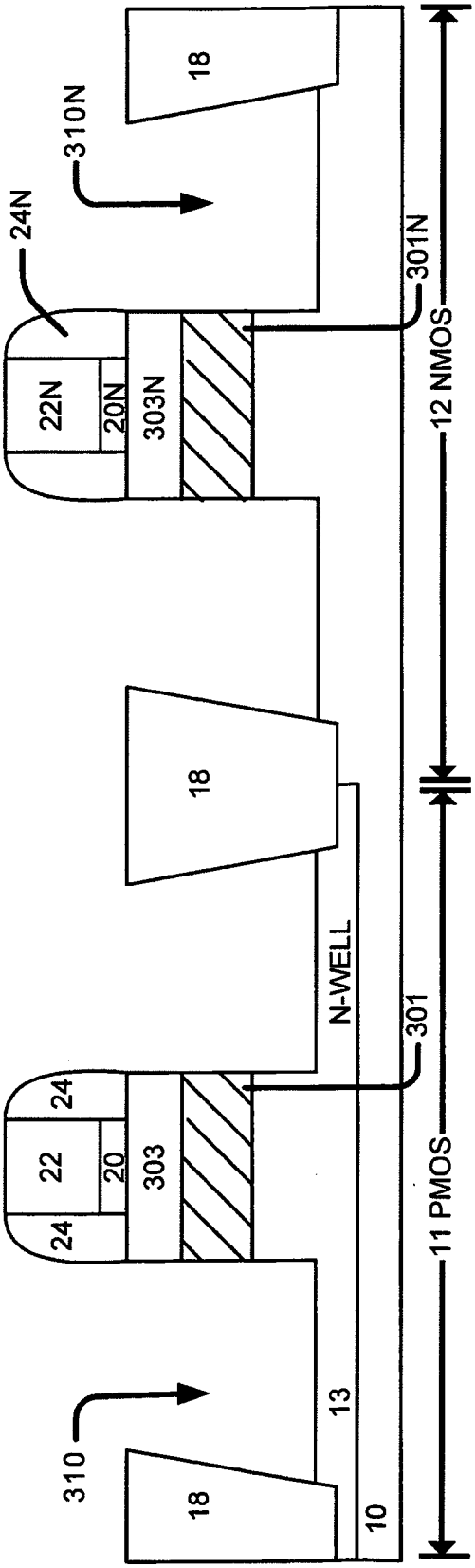

FIGURE 3D

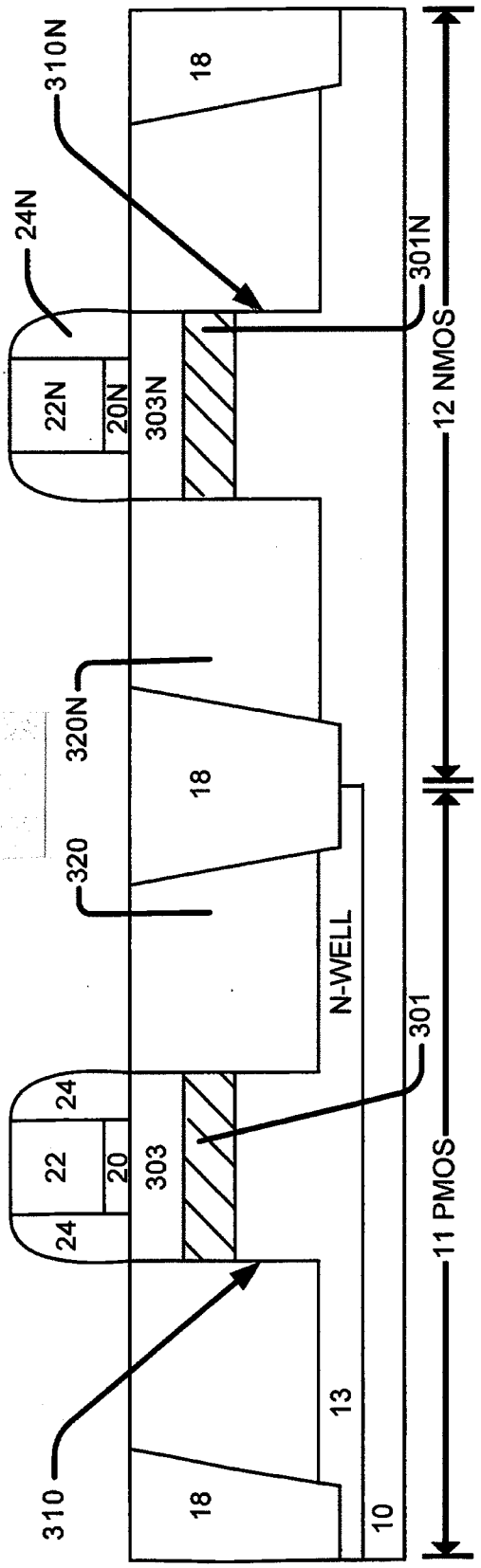

FIGURE 3E

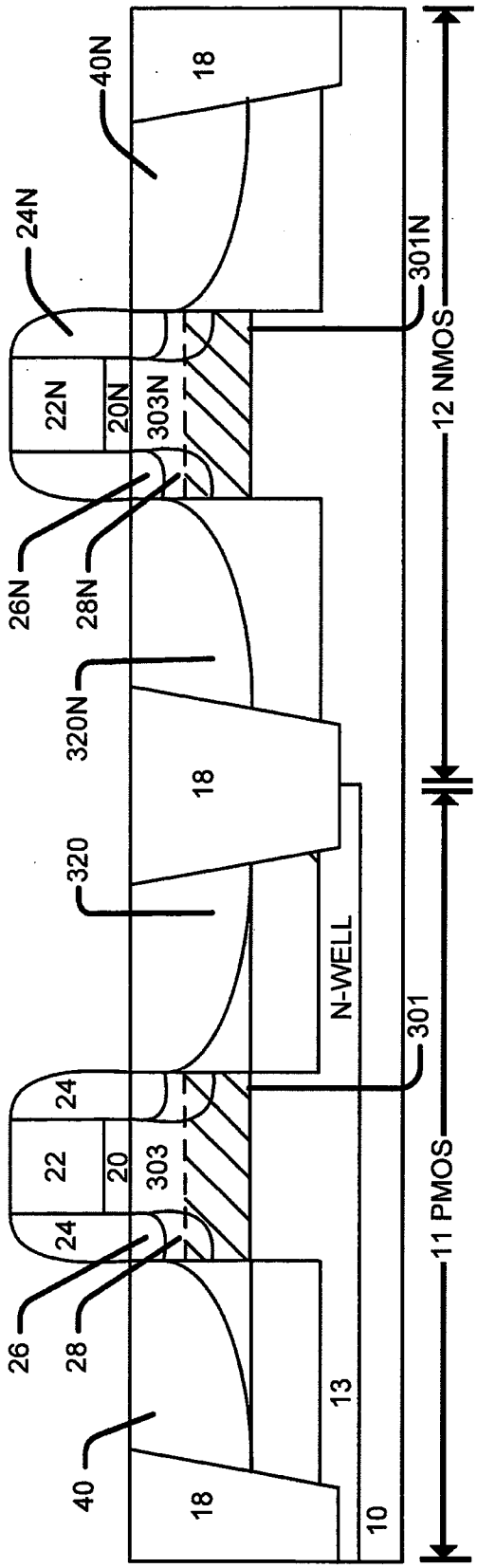

FIGURE 3F

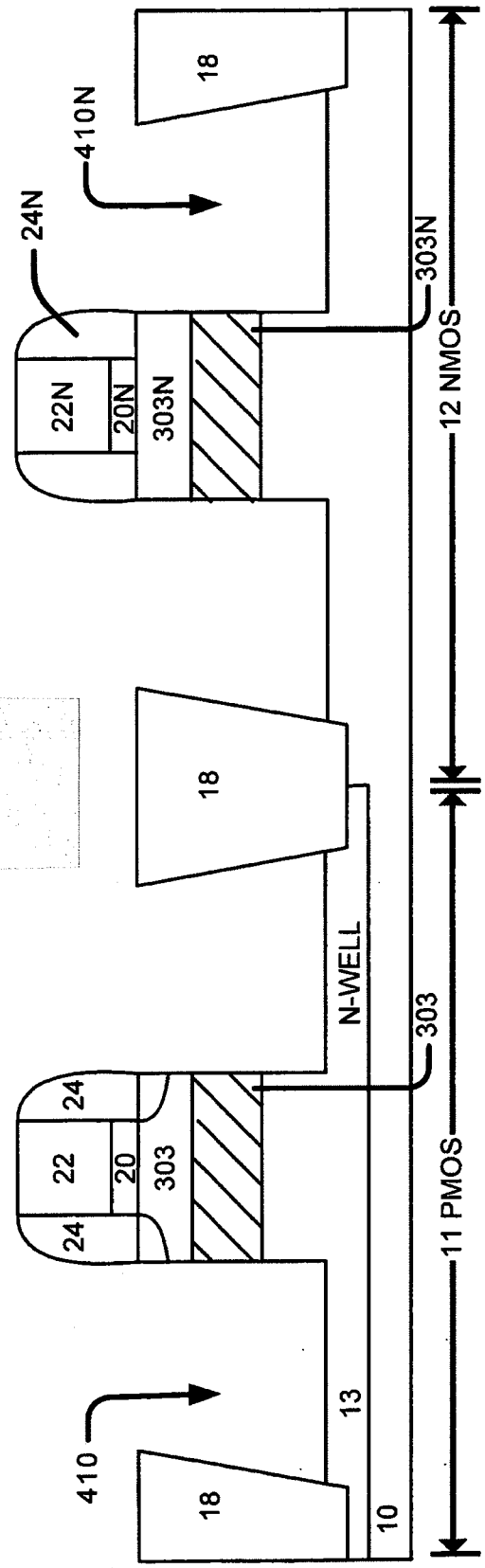

FIGURE 4A

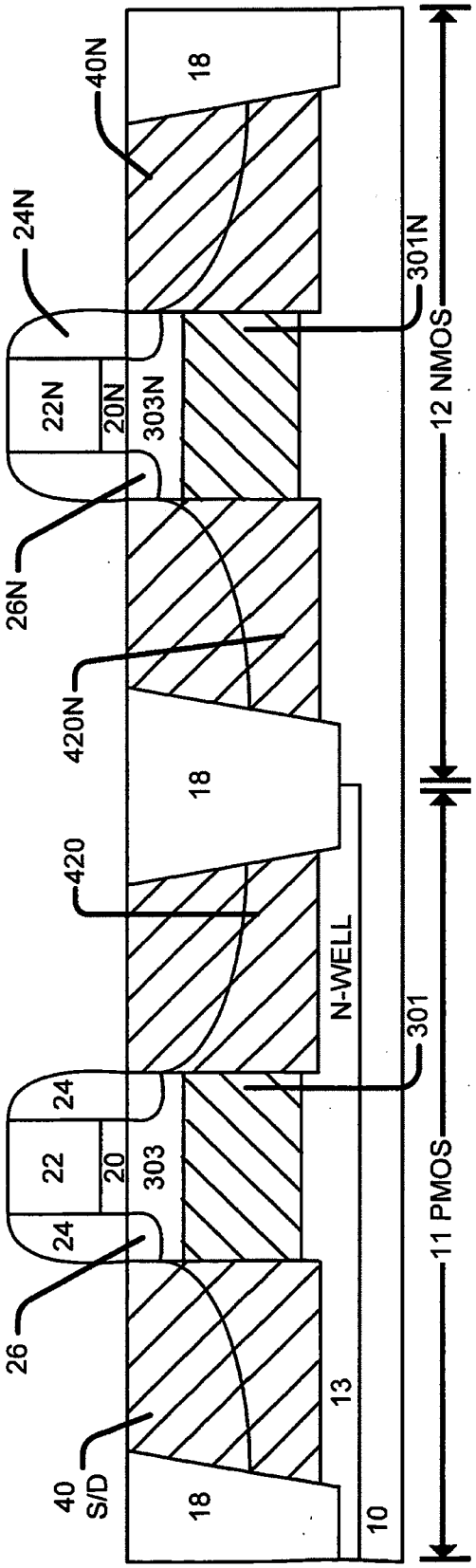

FIGURE 4B

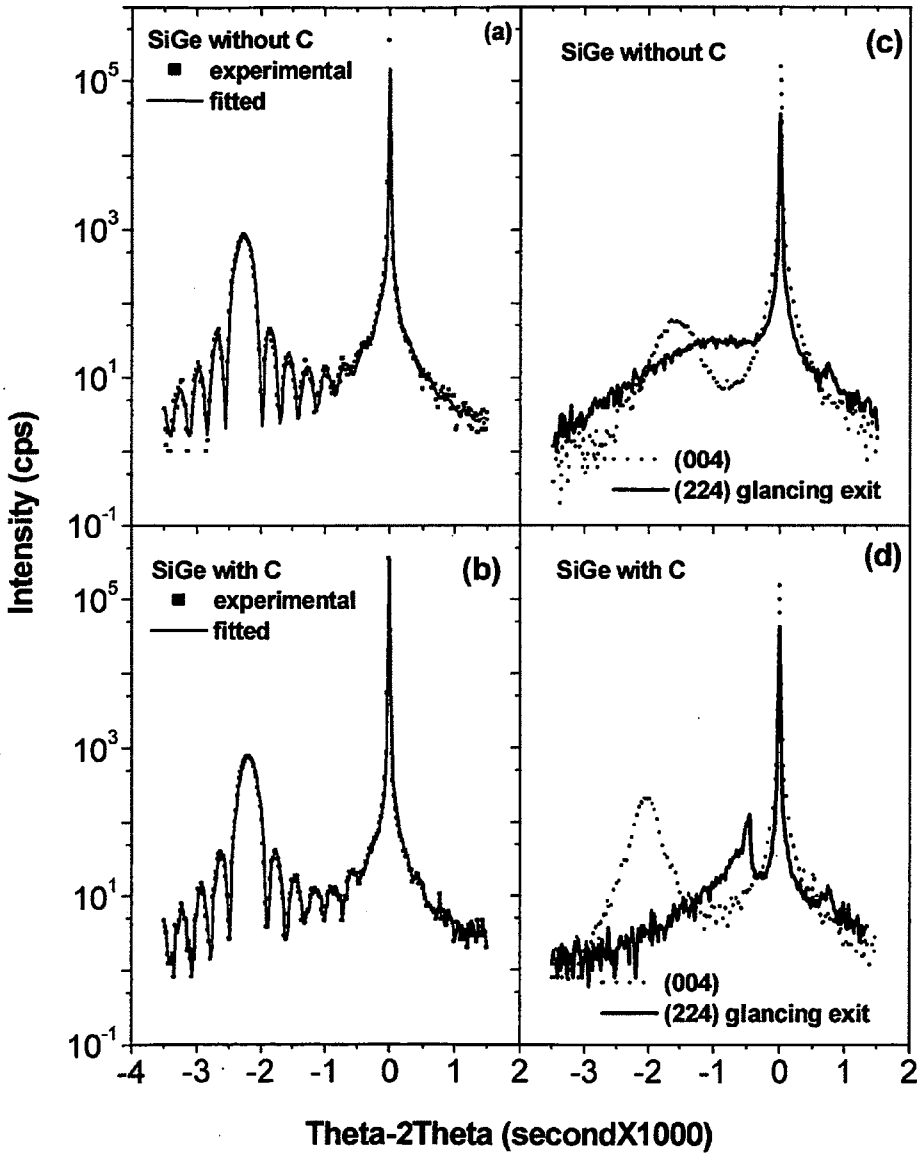
SiGe without C
experimental
fitted
(a)
SiGe without C
(c)
(004)
(224) glancing exit
SiGe with C
experimental
fitted
(b)
SiGe with C
(d)
(004)
(224) glancing exit
Intensity (cps)
Theta-2Theta (secondX1000)

FIGURE 5A

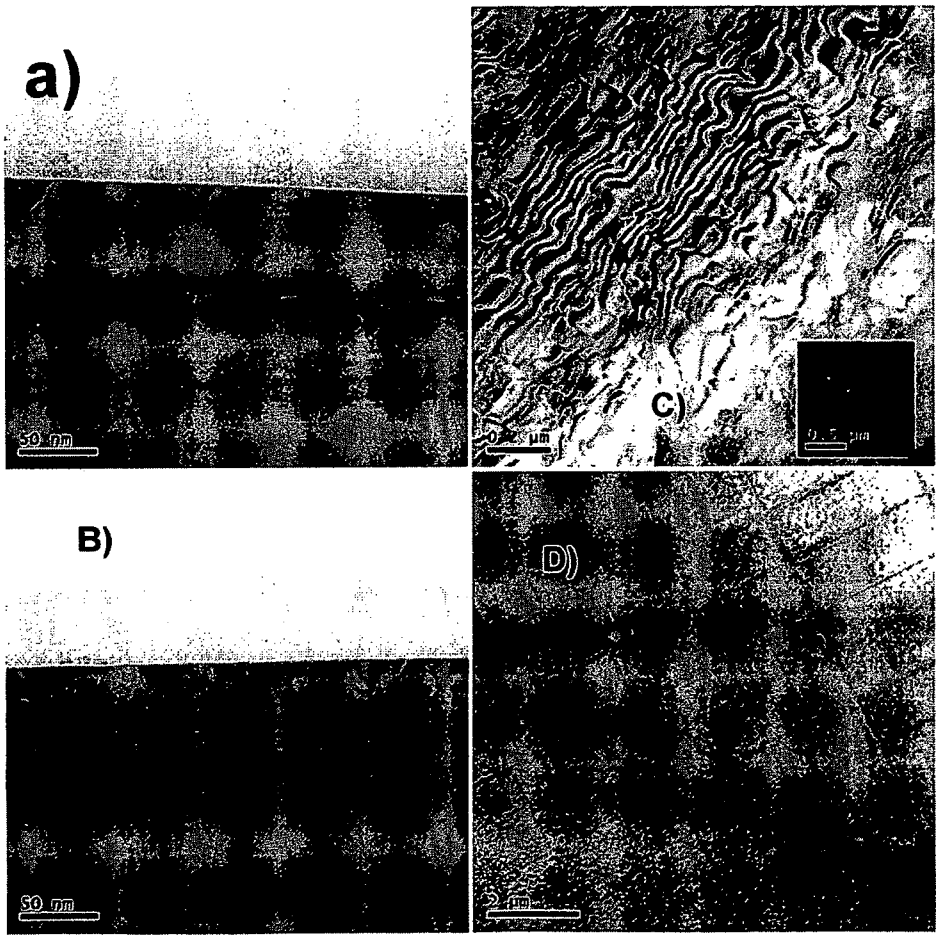

FIGURE 5B

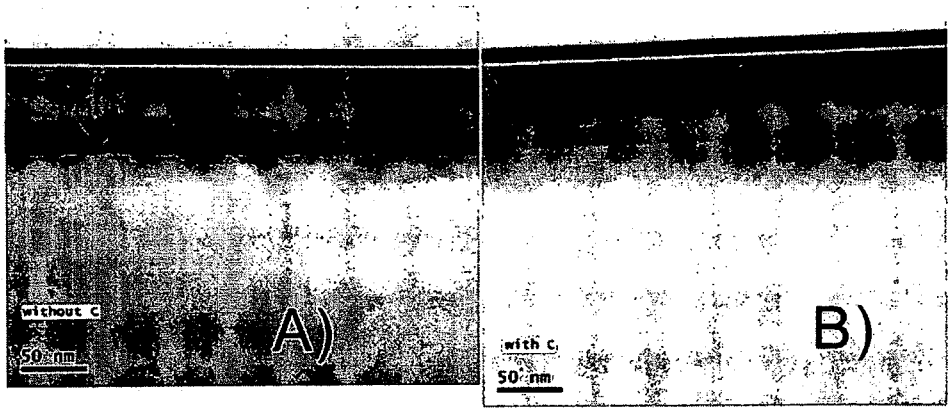

FIGURE 5C

Table 1

IMPlant process		57KeV, 5.2e13 As	
Process	Stress (As deposited)	After As implant+RTA	Percentage of the retained stress
SiGe POS Without B	-1.65E+09	-2.98E+08	18.07
with MMS, CN=0.5 sccm	-1.64E+09	-8.17E+08	49.83
with MMS, CN=1.2 sccm	-1.52E+09	-8.05E+08	52.84

Table 2

IMPlant process		3KeV, 6e14, BF2	
Process	Stress (As deposited)	After BF2 implant+RTA	Percentage of the retained stress
SiGe POS Without B	-1.65E+09	-1.56E+09	94.29
with MMS, CN=0.5 sccm	-1.64E+09	-1.55E+09	94.82
with MMS, CN=1.2 sccm	-1.52E+09	-1.46E+09	95.88

table 3

IMPlant process		7KeV, 1.5e15 B	
Process	Stress (As deposited)	After B implant+RTA	Percentage of the retained stress
SiGe POS Without B	-1.65E+09	-6.10E+08	36.94
with MMS, CN=0.5 sccm	-1.64E+09	-1.03E+09	62.86
with MMS, CN=1.2 sccm	-1.52E+09	-1.25E+09	82.22

table 4

IMPlant process		17KeV, 2.5e15, BF2	
Process	Stress (As deposited)	After BF2 implant+RTA	Percentage of the retained stress
SiGe POS Without B	-1.65E+09	-8.02E+08	48.62
with MMS, CN=0.5 sccm	-1.64E+09	-9.89E+08	60.35
with MMS, CN=1.2 sccm	-1.52E+09	-1.05E+09	69.13

FIGURE 6A

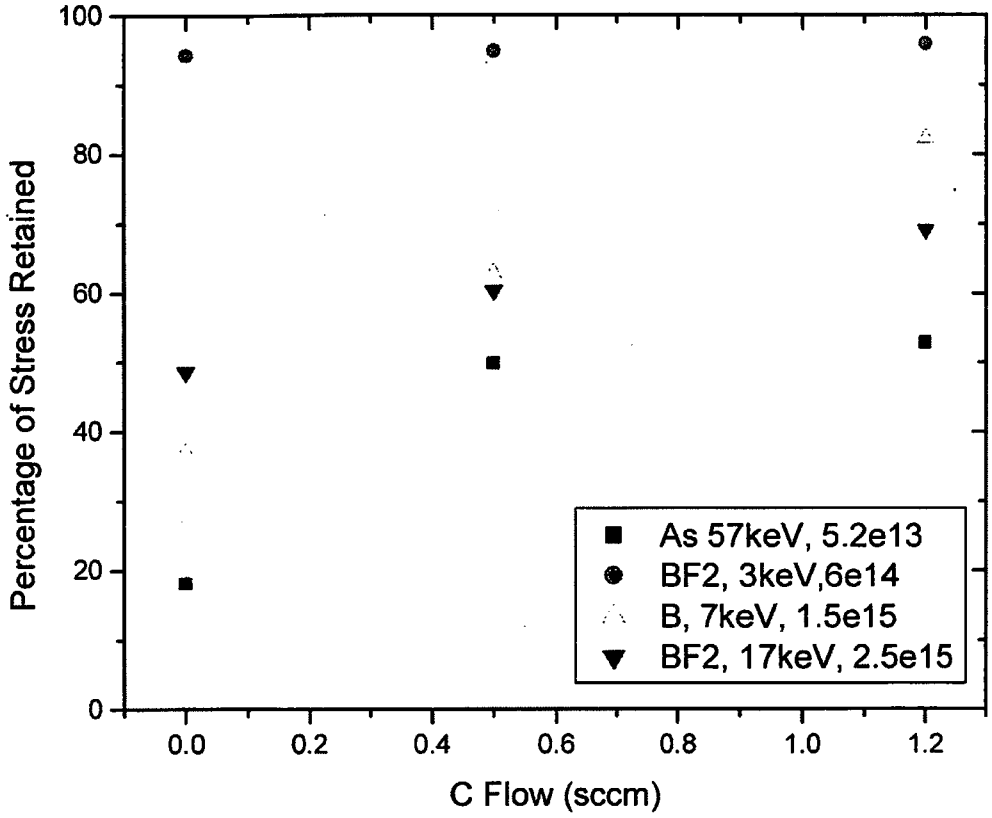
Percentage of Stress Retained
100
80
60
40
20
0
0.0
0.2
0.4
0.6
0.8
1.0
1.2
C Flow (sccm)
As 57keV, 5.2e13
BF2, 3keV,6e14
B, 7keV, 1.5e15
BF2, 17keV, 2.5e15

FIGURE 6B