(9002004414)

22/01/02

(12) INTERNATIONAL APPLICATION PUBLISHED UNDER THE PATENT COOPERATION TREATY (PCT)

(19) World Intellectual Property Organization
International Bureau

162162

(43) International Publication Date
1 February 2001 (01.02.2001)

PCT

(10) International Publication Number
WO 01/07321 A1

(51) International Patent Classification[6]: B65B 1/04

(21) International Application Number: PCT/US99/16640

(22) International Filing Date: 23 July 1999 (23.07.1999)

(25) Filing Language: English

(26) Publication Language: English

(71) Applicant *(for all designated States except US)*: **SCHOLLE CORPORATION** [US/US]; 19500 Jamboree Boulevard, Irvine, CA 92715 (US).

(72) Inventors; and

(75) Inventors/Applicants *(for US only)*: **SAVAGE, Chester** [US/US]; 6 Harvest, Irvine, CA 92604 (US). **ANDERSON, Mark** [AU/US]; 587 Cardiff, Irvine, CA 92606 (US). **SANDVOSS, Silvio** [US/US]; 23481 Bending Oak Court, Murrieta, CA 92562 (US).

(74) Agent: **MILLER, Terry, L.**; 24832 Via San Fernando, Mission Viejo, CA 92692 (US).

(81) Designated States *(national)*: AE, AL, AM, AT, AU, AZ, BA, BB, BG, BR, BY, CA, CH, CN, CU, CZ, DE, DK, EE, ES, FI, GB, GD, GE, GH, GM, HR, HU, ID, IL, IN, IS, JP, KE, KG, KP, KR, KZ, LC, LK, LR, LS, LT, LU, LV, MD, MG, MK, MN, MW, MX, NO, NZ, PL, PT, RO, RU, SD, SE, SG, SI, SK, SL, TJ, TM, TR, TT, UA, UG, US, UZ, VN, YU, ZA, ZW.

(84) Designated States *(regional)*: ARIPO patent (GH, GM, KE, LS, MW, SD, SL, SZ, UG, ZW), Eurasian patent (AM, AZ, BY, KG, KZ, MD, RU, TJ, TM), European patent (AT, BE, CH, CY, DE, DK, ES, FI, FR, GB, GR, IE, IT, LU, MC, NL, PT, SE), OAPI patent (BF, BJ, CF, CG, CI, CM, GA, GN, GW, ML, MR, NE, SN, TD, TG).

Published:
— *With international search report.*

For two-letter codes and other abbreviations, refer to the "Guidance Notes on Codes and Abbreviations" appearing at the beginning of each regular issue of the PCT Gazette.

ACTION

(54) **Title:** CONNECTOR ASSEMBLY FOR FLUID FLOW WITH ROTARY MOTION FOR CONNECTION AND DISCONNECTION

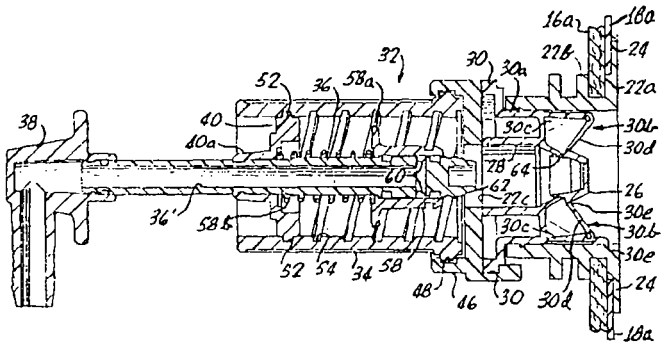

(57) **Abstract:** A two-part connector structure (22, 32) includes a male connector part (32) and a female connector part (22) which are mutually engageable to open fluid communication between the connector parts (22, 32). For example, the connector parts (22, 32) may be used to establish fluid communication between a container (12) and a conduit (14). The connector parts (22, 32) are disengageable from one another to discontinue fluid communication between them, and also to close communication between ambient and each of the container and the conduit. The male connector part (32) includes a mounting structure (32a) for supporting on the female connector part (22), and also includes a guide structure (44) effective to guide a male probe portion (36) of the male connector part (32) into engagement with the female connector part (22). A handnut (34) of the male connector part (32), and is effective upon manual rotation to cause axial relative movement of the male probe portion (36) into or out of engagement with the female connector part (32). This invention provides a connector structure (22, 32) with considerably lowered manual engagement and disengagement forces, along with increased convenience and ease of use.

WO 01/07321 A1