(12) INTERNATIONAL APPLICATION PUBLISHED UNDER THE PATENT COOPERATION TREATY (PCT)

(19) World Intellectual Property Organization
International Bureau

(43) International Publication Date
14 April 2022 (14.04.2022)

WIPO | PCT

(10) International Publication Number
WO 2022/074202 A2

(51) International Patent Classification:
G10L 19/008 (2013.01)

(21) International Application Number:
PCT/EP2021/077874

(22) International Filing Date:
08 October 2021 (08.10.2021)

(25) Filing Language: English

(26) Publication Language: English

(30) Priority Data:

20201093.0	09 October 2020 (09.10.2020)	EP
20207520.6	13 November 2020 (13.11.2020)	EP
21180873.8	22 June 2021 (22.06.2021)	EP

(71) Applicant: **FRAUNHOFER-GESELLSCHAFT ZUR FÖRDERUNG DER ANGEWANDTEN FORSCHUNG E.V.** [DE/DE]; Hansastraße 27c, 80686 München (DE).

(72) Inventors: **REUTELHUBER, Franz**; c/o Fraunhofer-Institut für Integrierte Schaltungen IIS, Am Wolfsmantel 33, 91058 Erlangen (DE). **FUCHS, Guillaume**; c/o Fraunhofer-Institut für Integrierte Schaltungen IIS, Am Wolfsmantel 33, 91058 Erlangen (DE). **MULTRUS, Markus**; c/o Fraunhofer-Institut für Integrierte Schaltungen IIS, Am Wolfsmantel 33, 91058 Erlangen (DE). **FOTOPOULOU, Eleni**; c/o Fraunhofer-Institut für Integrierte Schaltungen IIS, Am Wolfsmantel 33, 91058 Erlangen (DE). **BAYER, Stefan**; c/o Fraunhofer-Institut für Integrierte Schaltungen IIS, Am Wolfsmantel 33, 91058 Erlangen (DE). **BÜTHE, Jan**; c/o Fraunhofer-Institut für Integrierte Schaltungen IIS, Am Wolfsmantel 33, 91058 Erlangen (DE). **DÖHLA, Ste-**

(54) Title: APPARATUS, METHOD, OR COMPUTER PROGRAM FOR PROCESSING AN ENCODED AUDIO SCENE USING A PARAMETER SMOOTHING

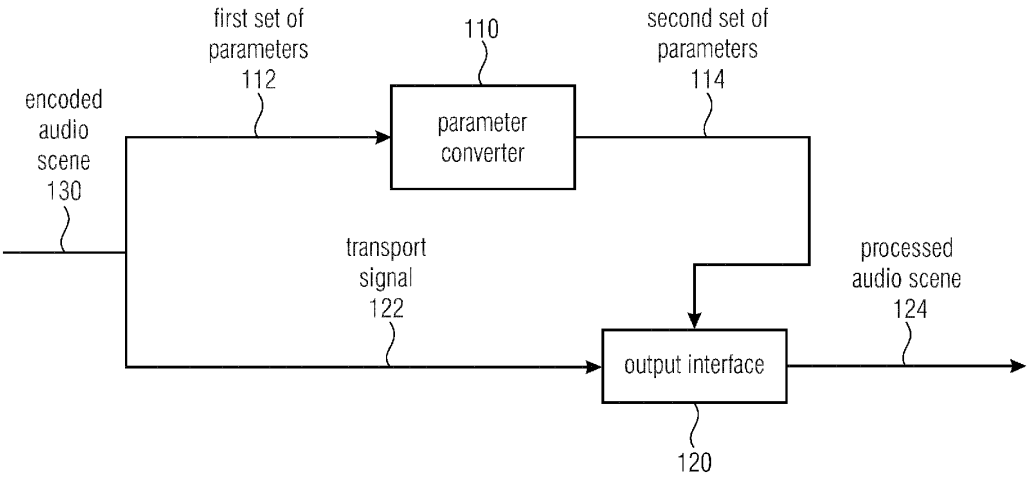

Fig. 1

(57) Abstract: Apparatus for processing an audio scene (130) representing a sound field, the audio scene (130) comprising information on a transport signal (122) and a first set of parameters (112). The apparatus comprising a parameter processor (110) for processing the first set of parameters (112) to obtain a second set of parameters (114), wherein the parameter processor (110) is configured to calculate at least one raw parameter (252) for each output time frame (220) using at least one parameter of the first set of parameters (112) for the input time frame (210), to calculate a smoothing information (512; 522) such as a factor for each raw parameter (252) in accordance with a smoothing rule, and to apply a corresponding smoothing information (512; 522) to the corresponding raw parameter (252) to derive the parameter of the second set of parameters (114) for the output time frame (220). The apparatus further comprising an output interface (120) for generating a processed audio scene (124) using the second set of parameters (114) and the information

WO 2022/074202 A2

[Continued on next page]

fan; c/o Fraunhofer-Institut für Integrierte Schaltungen IIS, Am Wolfsmantel 33, 91058 Erlangen (DE).

(74) **Agent: SCHENK, Markus** et al.; Schoppe, Zimmermann, Stöckeler, Zinkler, Schenk & Partner mbB, Radlkoferstr. 2, 81373 München (DE).

(81) **Designated States** *(unless otherwise indicated, for every kind of national protection available)*: AE, AG, AL, AM, AO, AT, AU, AZ, BA, BB, BG, BH, BN, BR, BW, BY, BZ, CA, CH, CL, CN, CO, CR, CU, CZ, DE, DJ, DK, DM, DO, DZ, EC, EE, EG, ES, FI, GB, GD, GE, GH, GM, GT, HN, HR, HU, ID, IL, IN, IR, IS, IT, JO, JP, KE, KG, KH, KN, KP, KR, KW, KZ, LA, LC, LK, LR, LS, LU, LY, MA, MD, ME, MG, MK, MN, MW, MX, MY, MZ, NA, NG, NI, NO, NZ, OM, PA, PE, PG, PH, PL, PT, QA, RO, RS, RU, RW, SA, SC, SD, SE, SG, SK, SL, ST, SV, SY, TH, TJ, TM, TN, TR, TT, TZ, UA, UG, US, UZ, VC, VN, WS, ZA, ZM, ZW.

(84) **Designated States** *(unless otherwise indicated, for every kind of regional protection available)*: ARIPO (BW, GH, GM, KE, LR, LS, MW, MZ, NA, RW, SD, SL, ST, SZ, TZ, UG, ZM, ZW), Eurasian (AM, AZ, BY, KG, KZ, RU, TJ, TM), European (AL, AT, BE, BG, CH, CY, CZ, DE, DK, EE, ES, FI, FR, GB, GR, HR, HU, IE, IS, IT, LT, LU, LV, MC, MK, MT, NL, NO, PL, PT, RO, RS, SE, SI, SK, SM, TR), OAPI (BF, BJ, CF, CG, CI, CM, GA, GN, GQ, GW, KM, ML, MR, NE, SN, TD, TG).

Published:

— *without international search report and to be republished upon receipt of that report (Rule 48.2(g))*

on the transport signal (122).