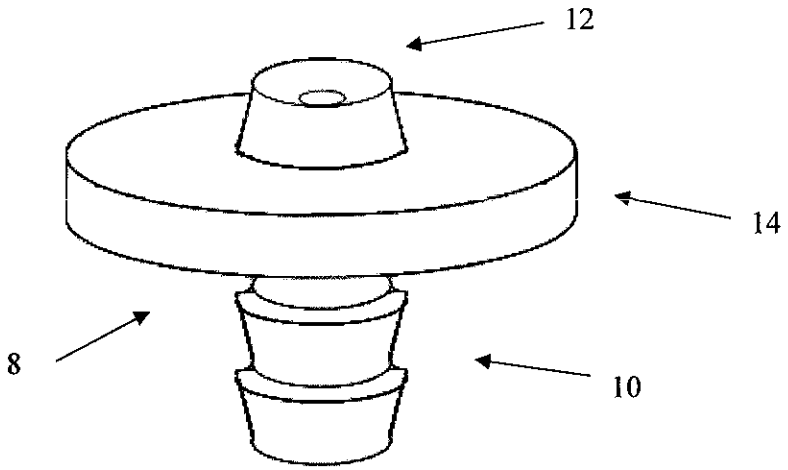


FIGURE 1

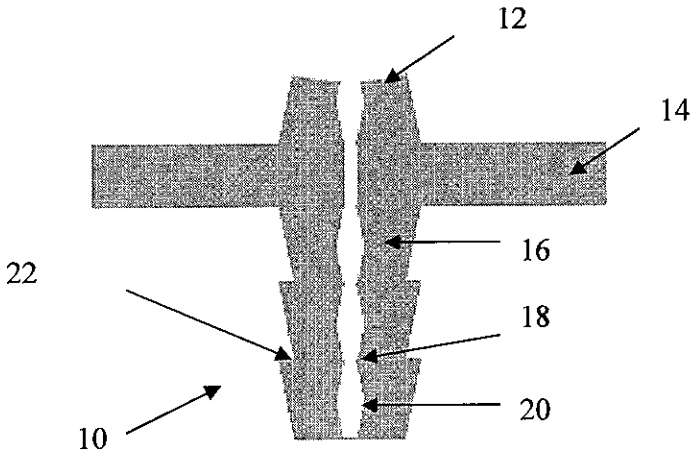


FIGURE 2

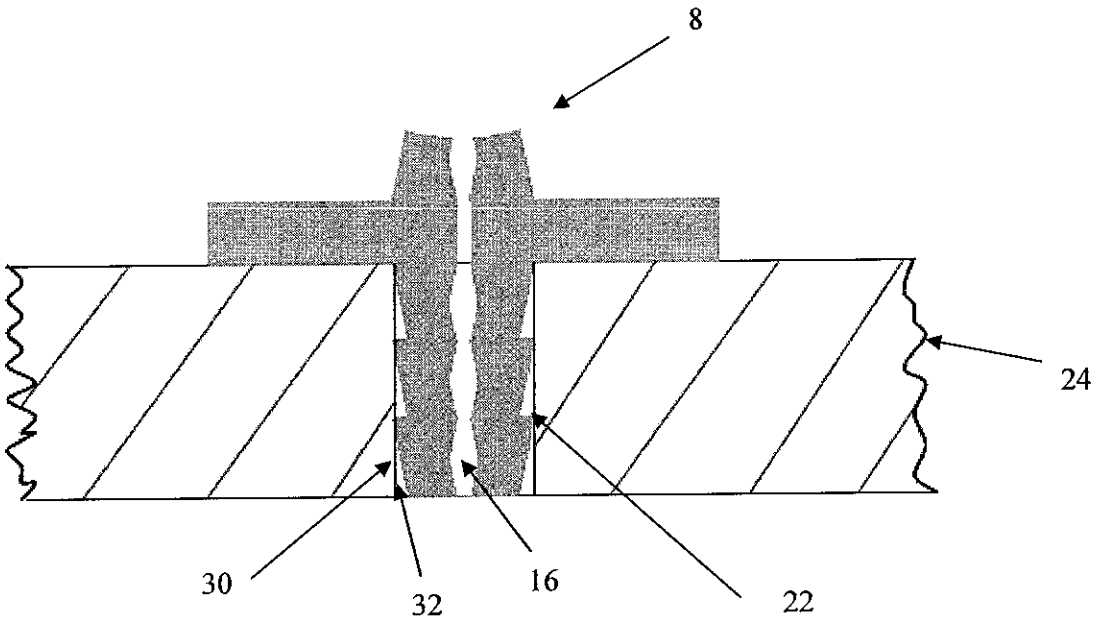


**FIGURE 3**

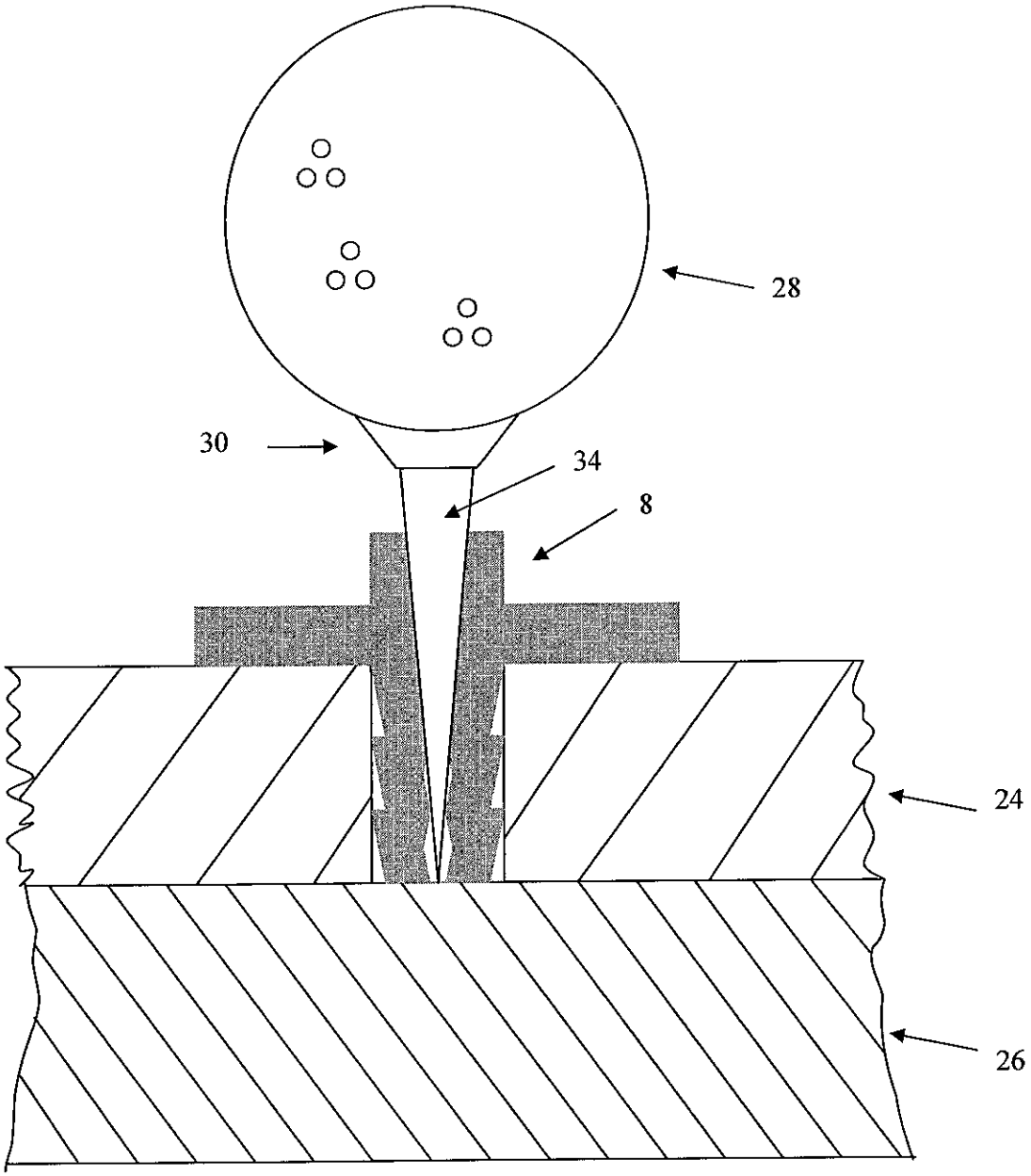


FIGURE 4