Fig. 1

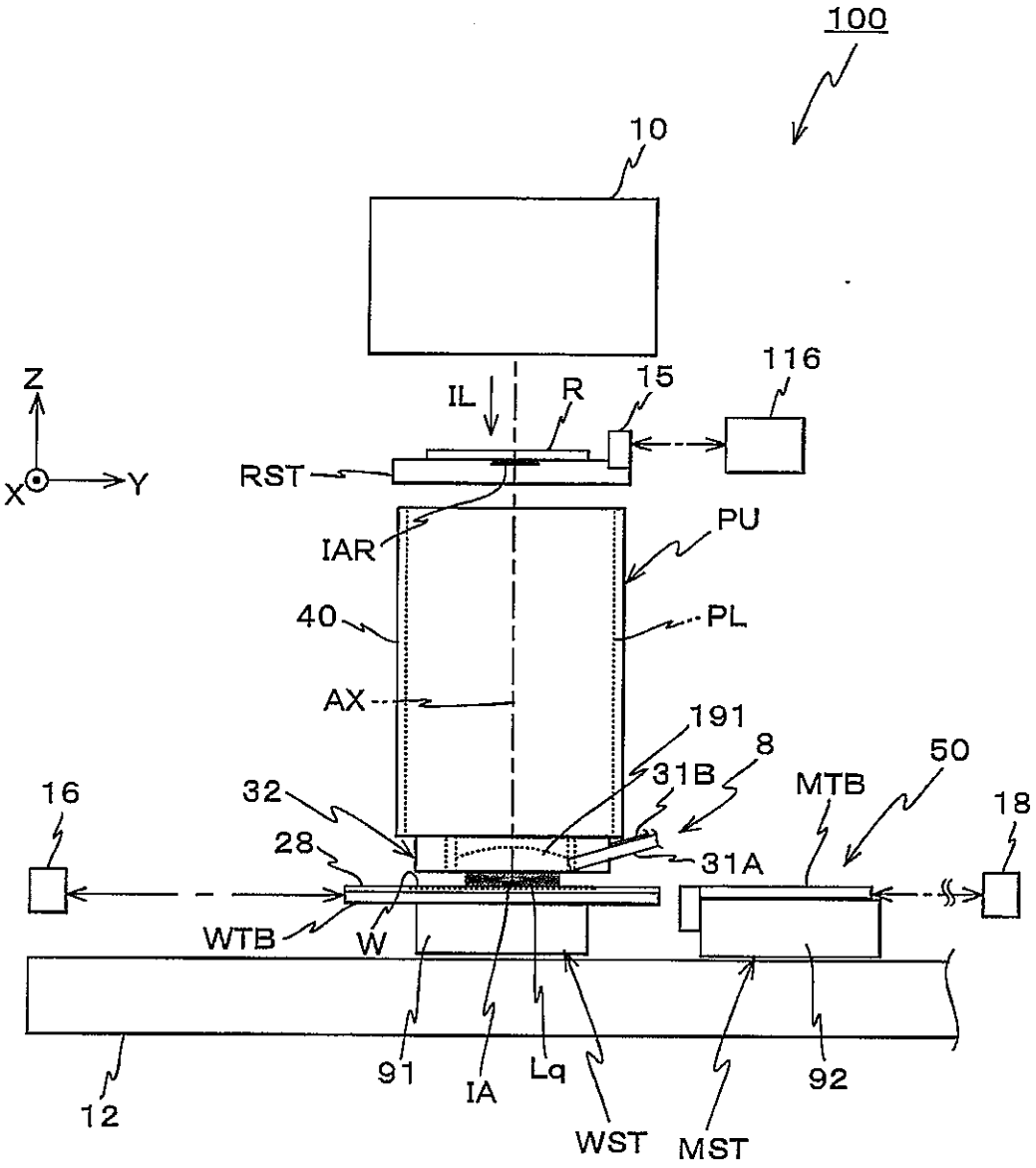
100
10
Z
X
Y
IL
R
15
116
RST
IAR
PU
40
PL
AX
191
8
31B
50
MTB
16
32
18
28
31A
WTB
W
91
IA
Lq
92
12
WST
MST

Fig. 2

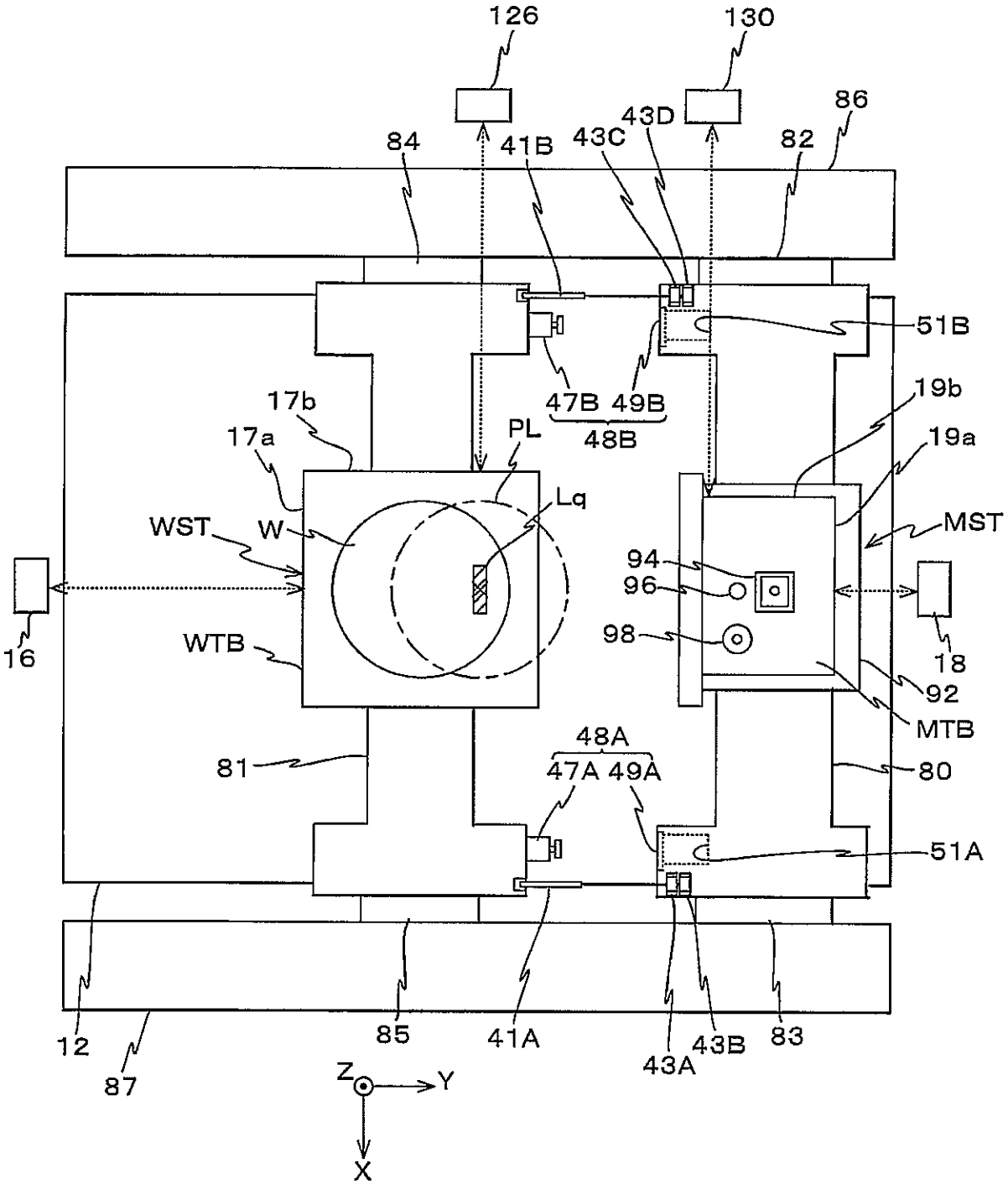
126
130
86
84
41B
43C
43D
82
51B
47B 49B
48B
17b
17a
PL
19b
19a
Lq
WST
W
MST
94
96
16
98
18
WTB
92
MTB
48A
47A 49A
81
80
51A
12
85
41A
43A
43B
83
87
Z
Y
X

Fig. 3

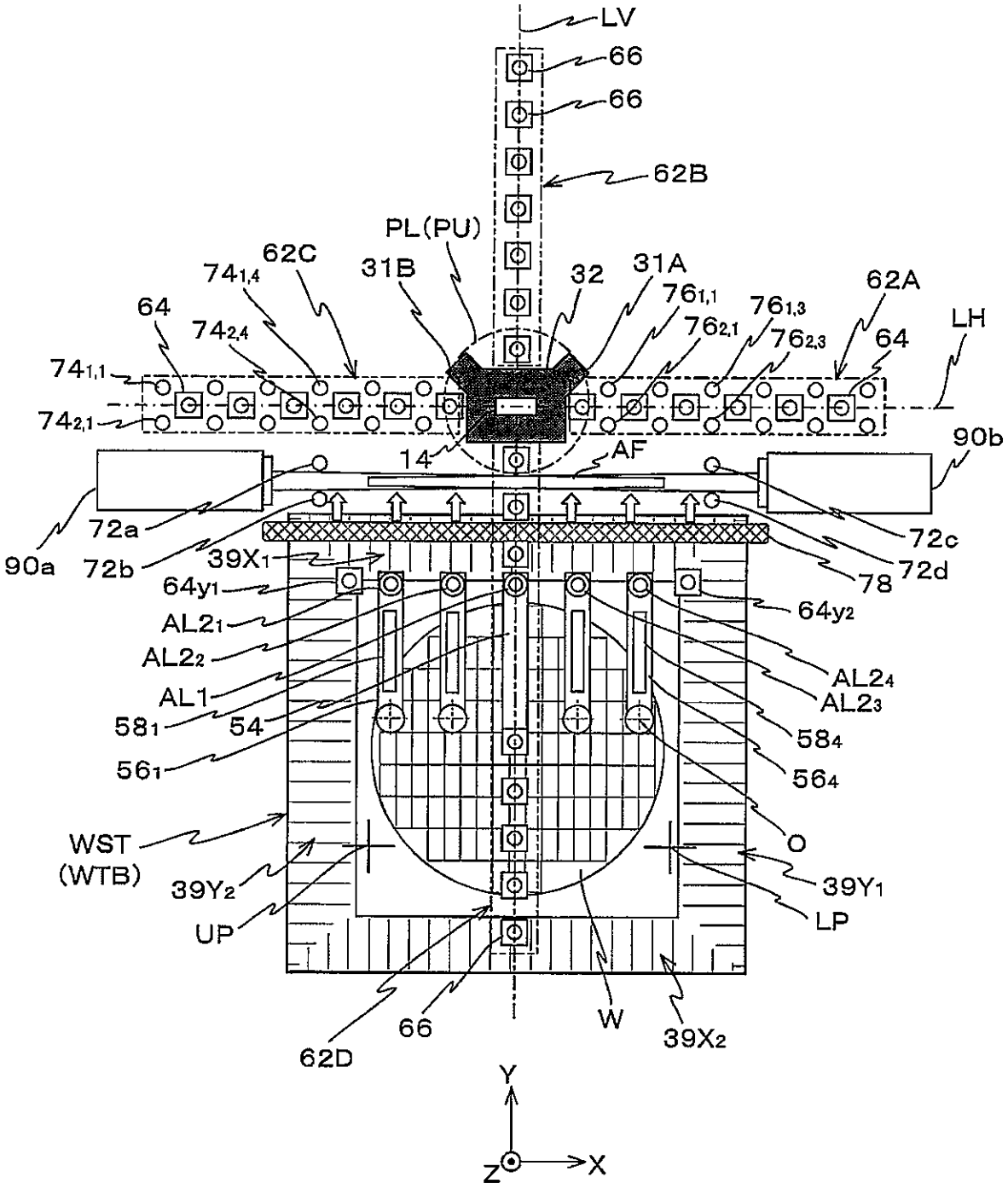
LV
66
66
62B
PL(PU)
62C
31B
32
31A
62A
LH
64
64
90b
14
AF
90a
72a
72b
72c
72d
78
39X1
64y1
64y2
AL21
AL22
AL24
AL23
AL1
581
54
584
561
564
WST
(WTB)
O
39Y2
39Y1
UP
LP
62D
66
W
39X2
Y
Z
X

Fig. 4A

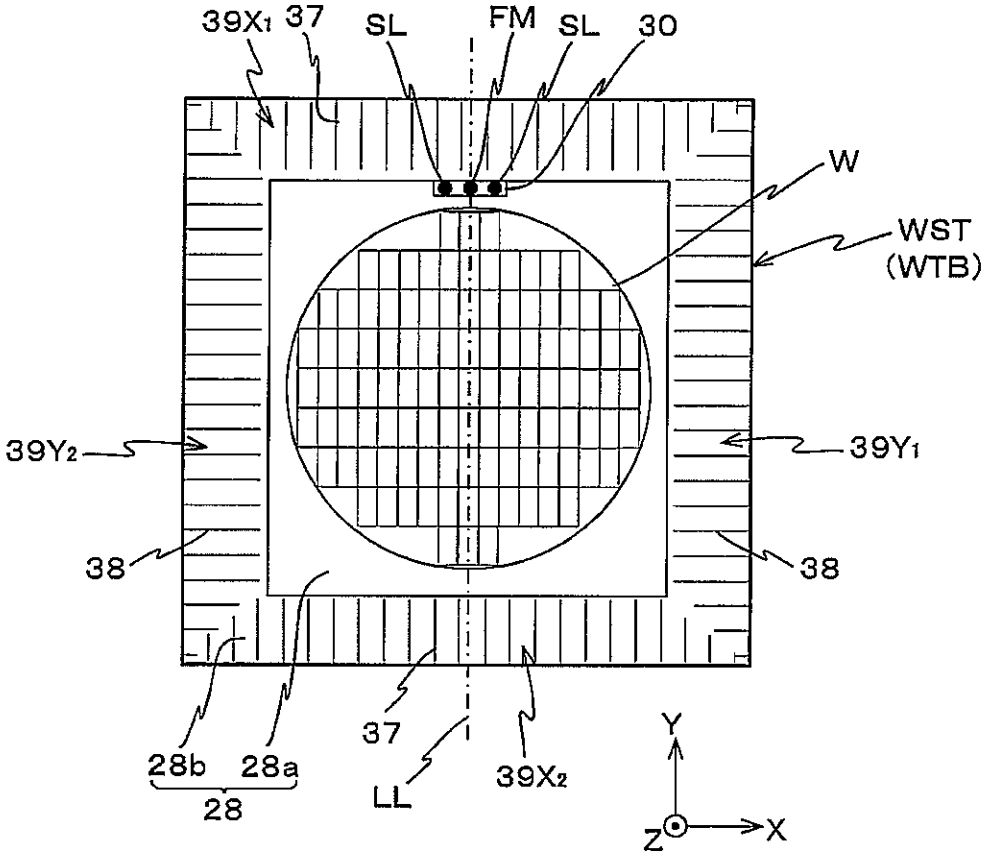
39X1
37
SL
FM
SL
30
W
WST
(WTB)
39Y2
39Y1
38
38
28b
28a
28
37
LL
39X2
Y
Z
X

Fig. 4B

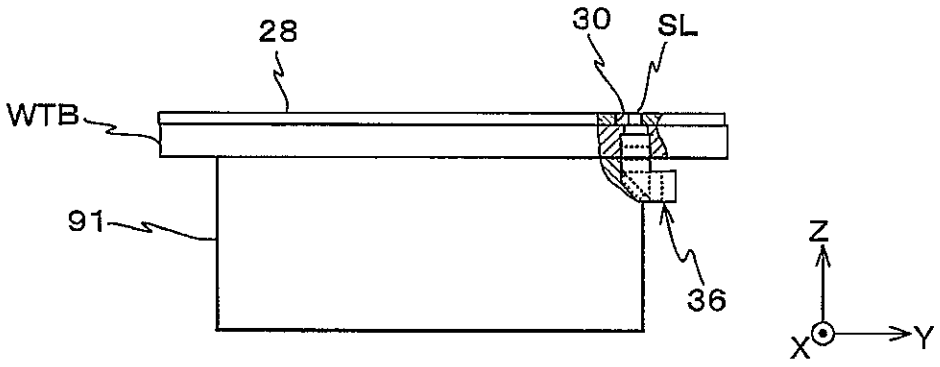
28
30
SL
WTB
91
36
Z
X
Y

Fig. 5A

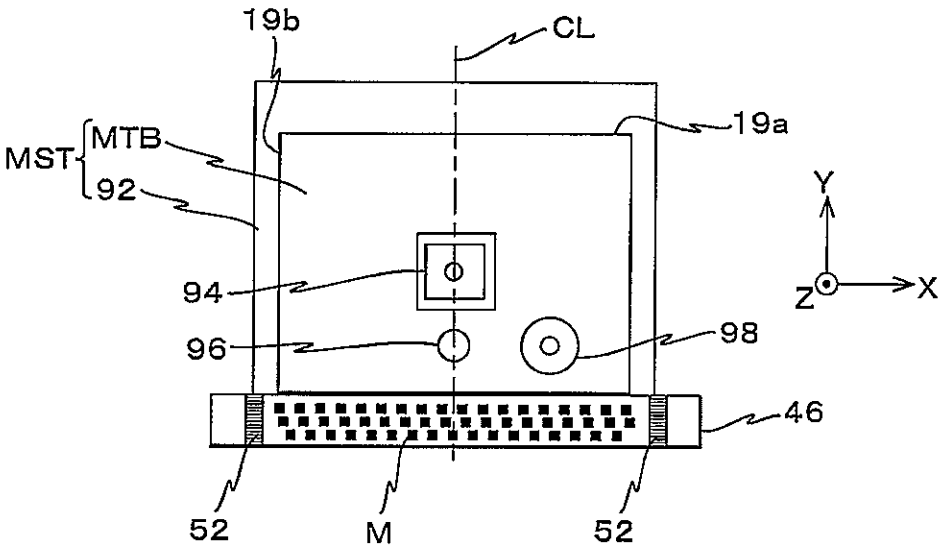

Fig. 5B

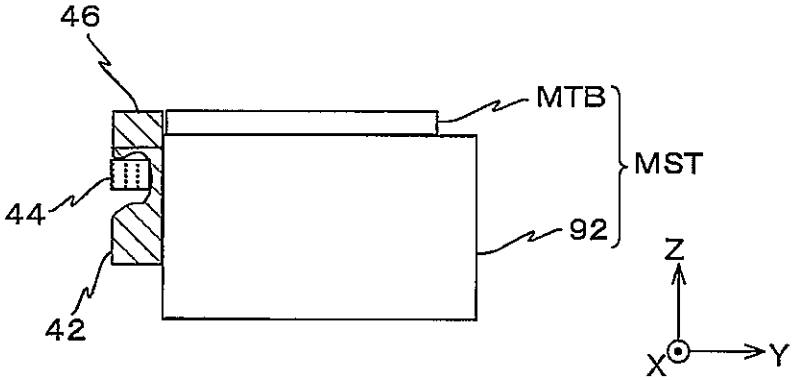

Fig. 6

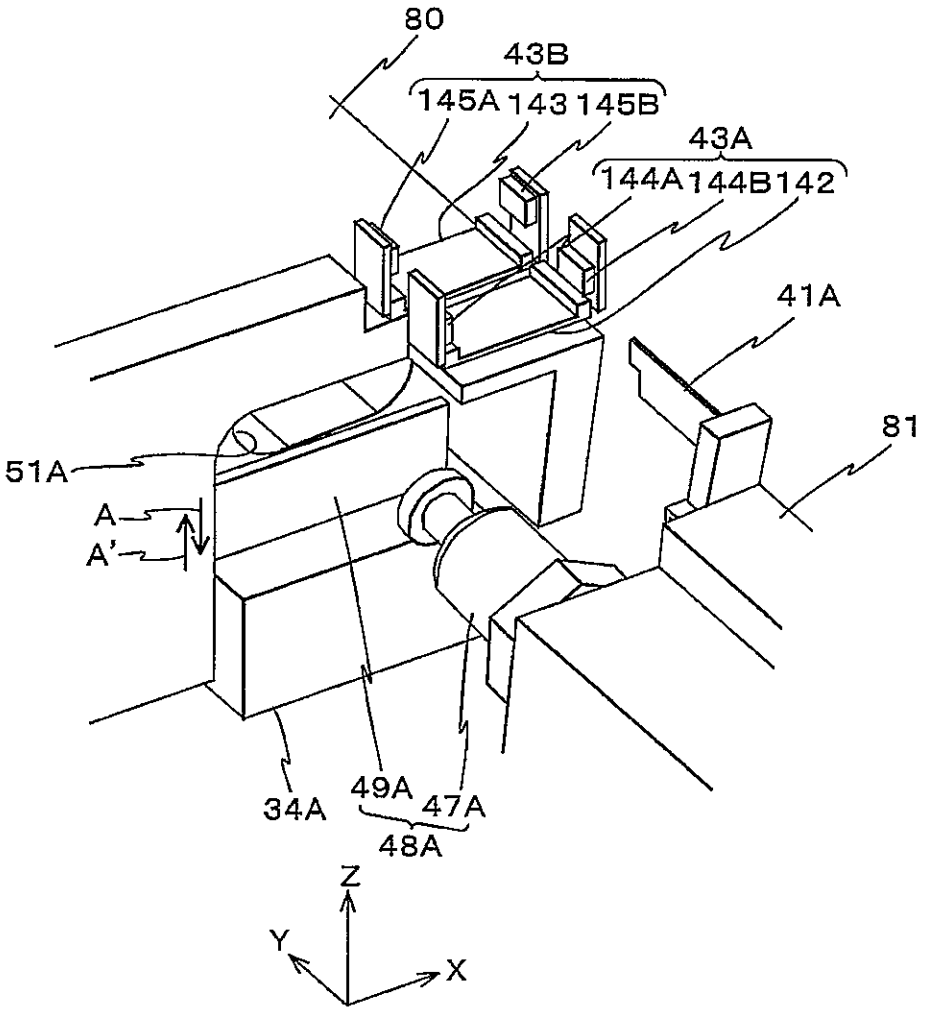
80
43B
145A
143
145B
43A
144A
144B
142
41A
81
51A
A
A'
34A
49A
47A
48A
Z
Y
X

Fig. 7A

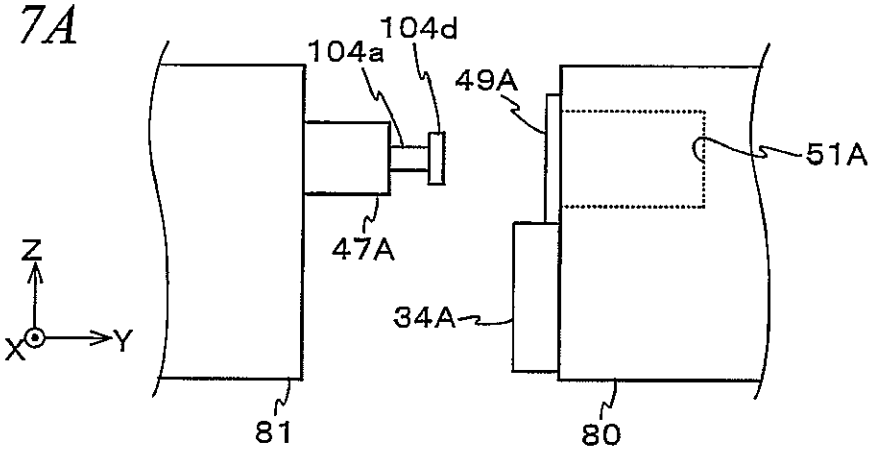

Fig. 7B

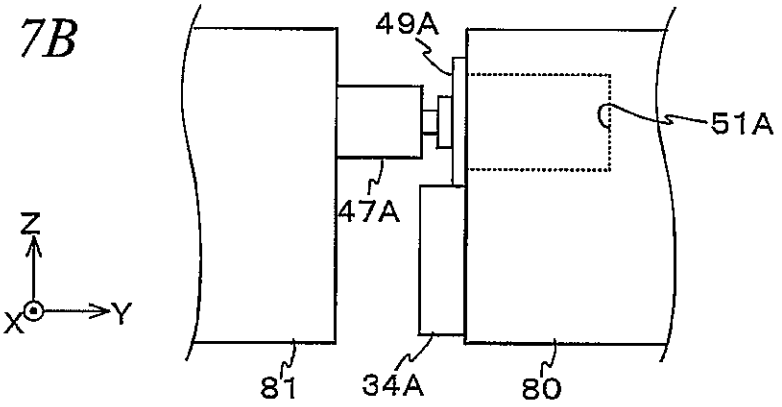

Fig. 7C

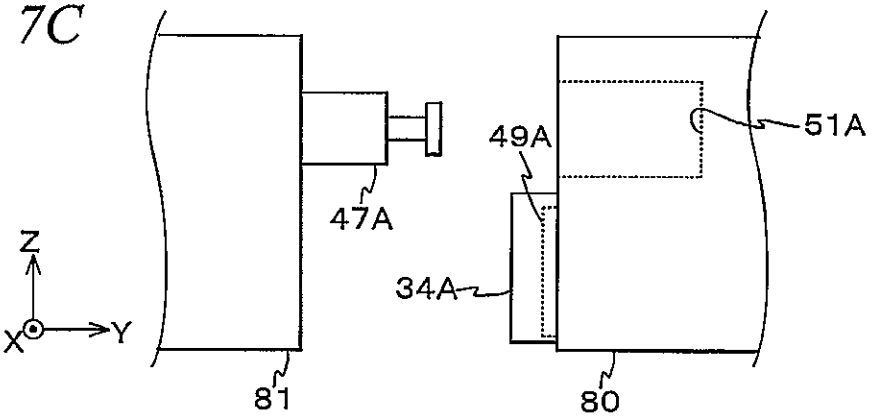

Fig. 7D

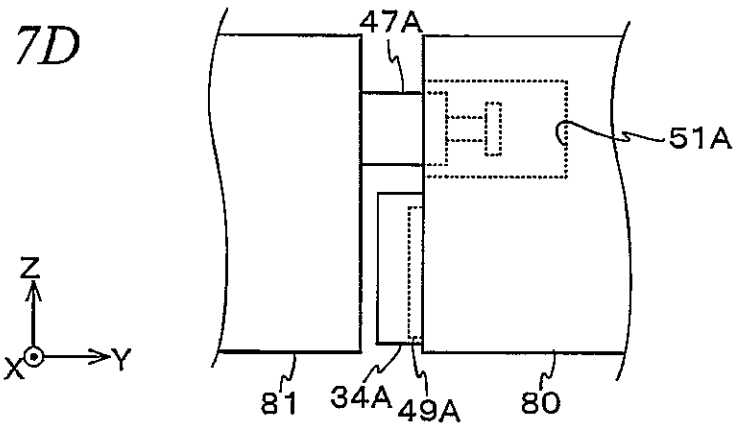

Fig. 8

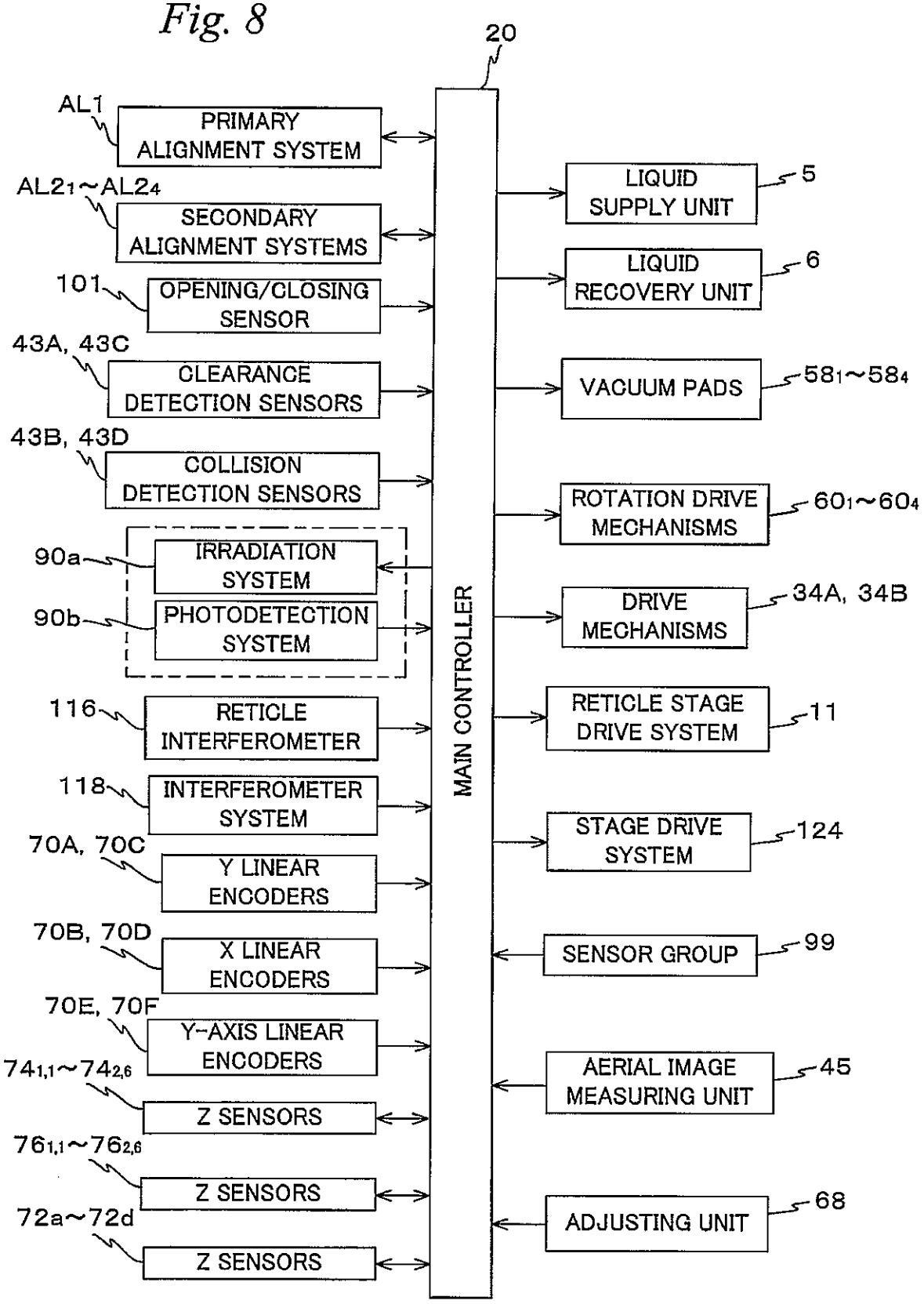
20
AL1
PRIMARY ALIGNMENT SYSTEM
AL2₁~AL2₄
SECONDARY ALIGNMENT SYSTEMS
101
OPENING/CLOSING SENSOR
43A, 43C
CLEARANCE DETECTION SENSORS
43B, 43D
COLLISION DETECTION SENSORS
90a
IRRADIATION SYSTEM
90b
PHOTODETECTION SYSTEM
116
RETICLE INTERFEROMETER
118
INTERFEROMETER SYSTEM
70A, 70C
Y LINEAR ENCODERS
70B, 70D
X LINEAR ENCODERS
70E, 70F
Y-AXIS LINEAR ENCODERS
74₁,₁~74₂,₆
Z SENSORS
76₁,₁~76₂,₆
Z SENSORS
72a~72d
Z SENSORS
MAIN CONTROLLER
LIQUID SUPPLY UNIT
5
LIQUID RECOVERY UNIT
6
VACUUM PADS
58₁~58₄
ROTATION DRIVE MECHANISMS
60₁~60₄
DRIVE MECHANISMS
34A, 34B
RETICLE STAGE DRIVE SYSTEM
11
STAGE DRIVE SYSTEM
124
SENSOR GROUP
99
AERIAL IMAGE MEASURING UNIT
45
ADJUSTING UNIT
68

Fig. 9A

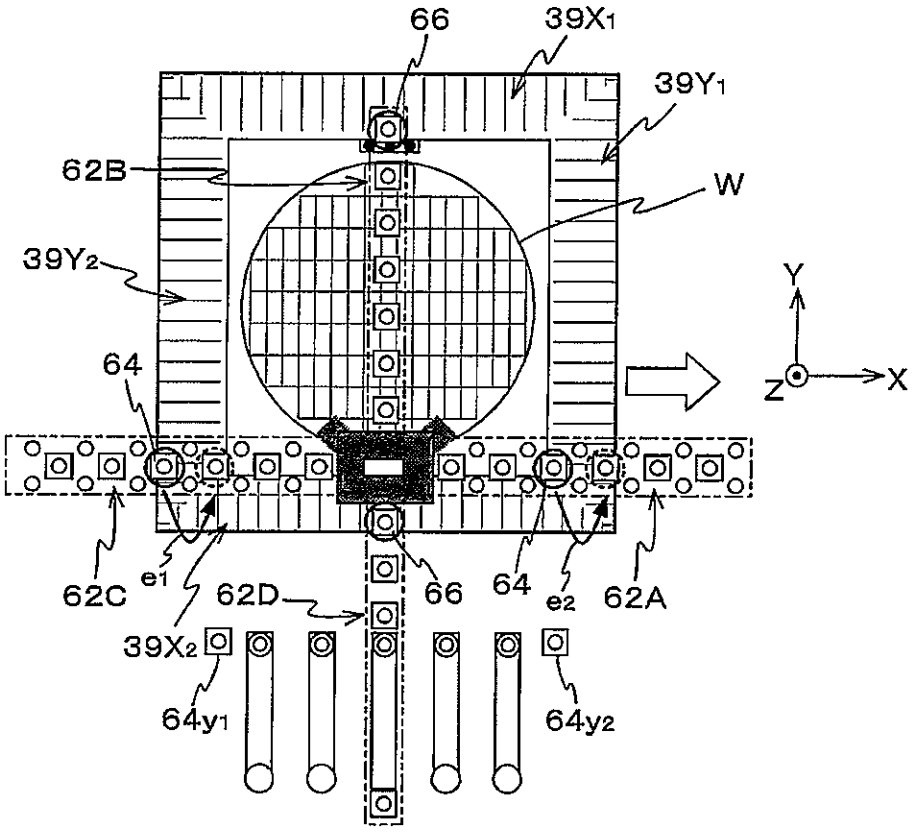
66
39X1
39Y1
62B
W
39Y2
64
Y
Z
X
62C
e1
62D
66
64
e2
62A
39X2
64y1
64y2

Fig. 9B

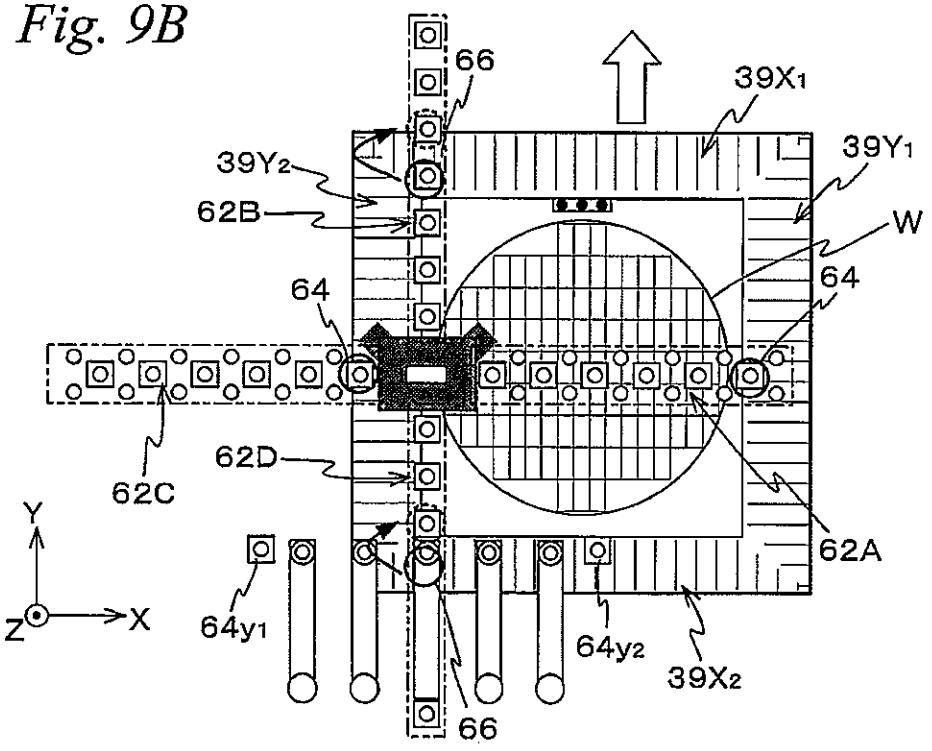
66
39X1
39Y1
39Y2
62B
W
64
64
62C
62D
62A
Y
Z
X
64y1
64y2
39X2
66

Fig. 10A

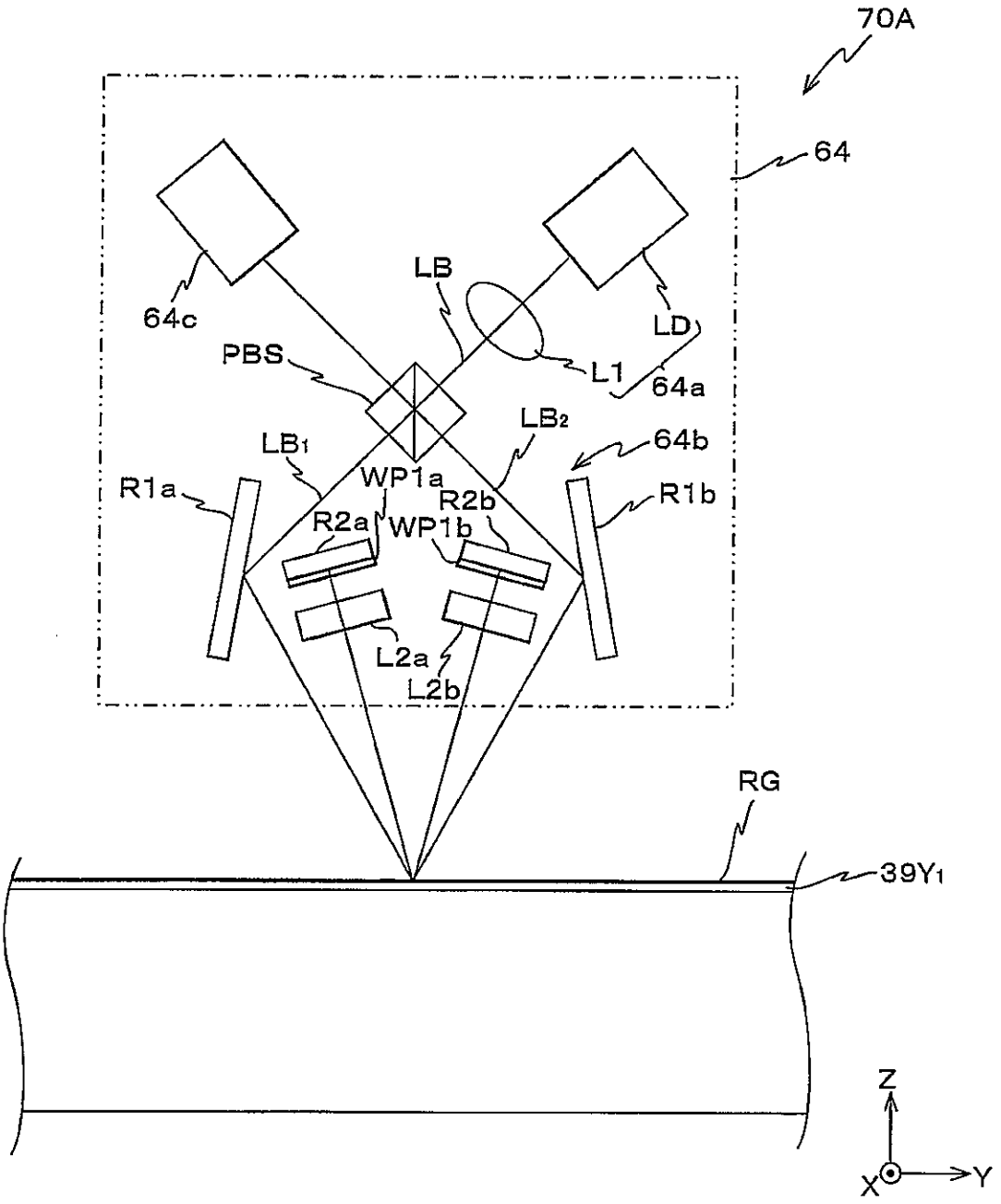

Fig. 10B

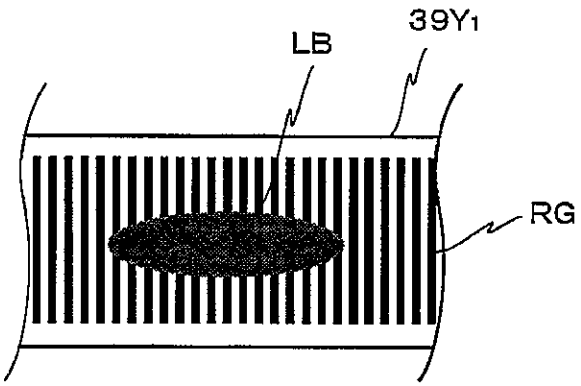

Fig. 11

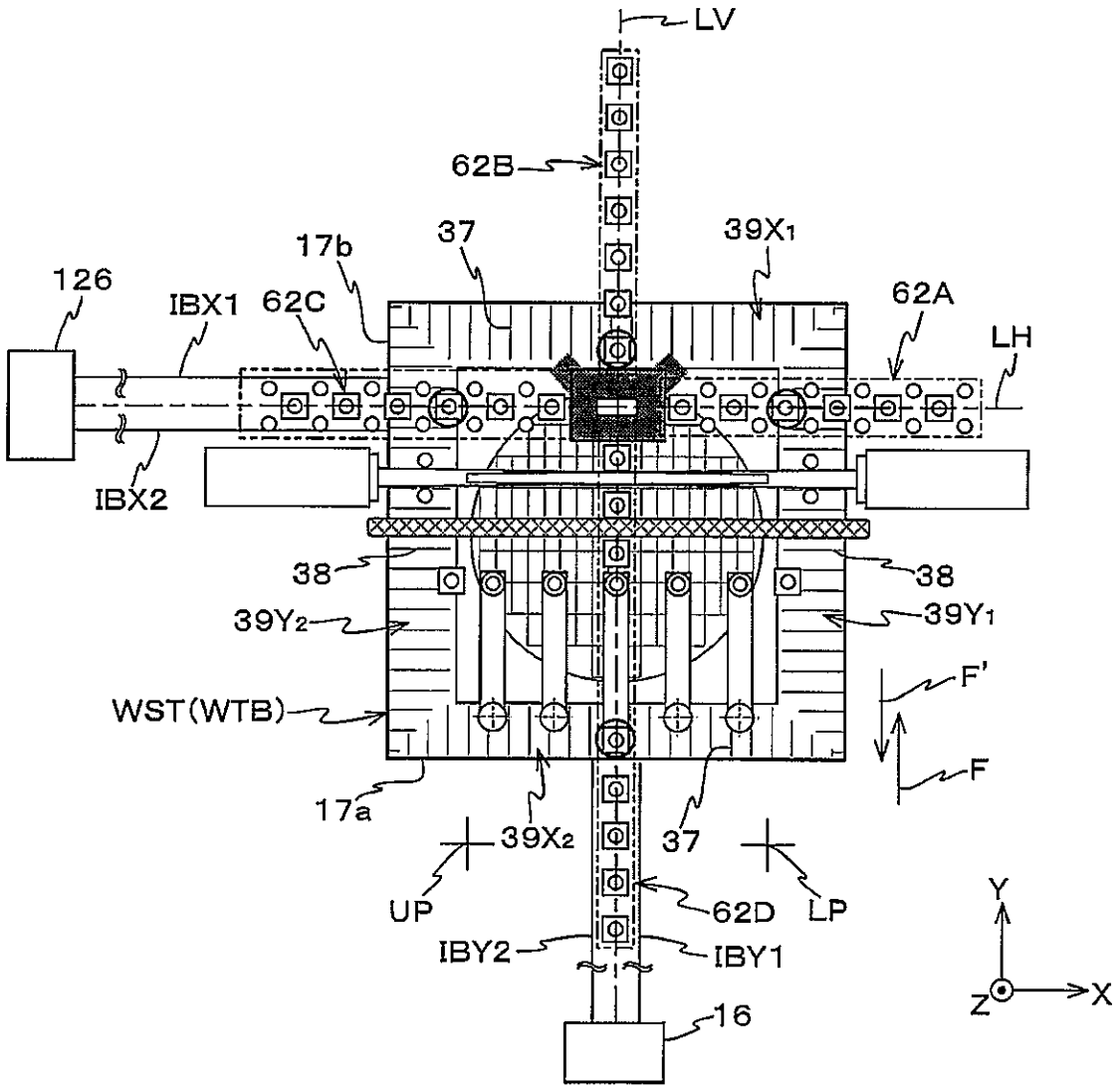
LV
62B
17b
37
39X1
126
IBX1
62C
62A
LH
IBX2
38
38
39Y2
39Y1
F'
WST(WTB)
F
17a
39X2
37
UP
LP
62D
IBY2
IBY1
16
Y
Z
X

Fig. 12A

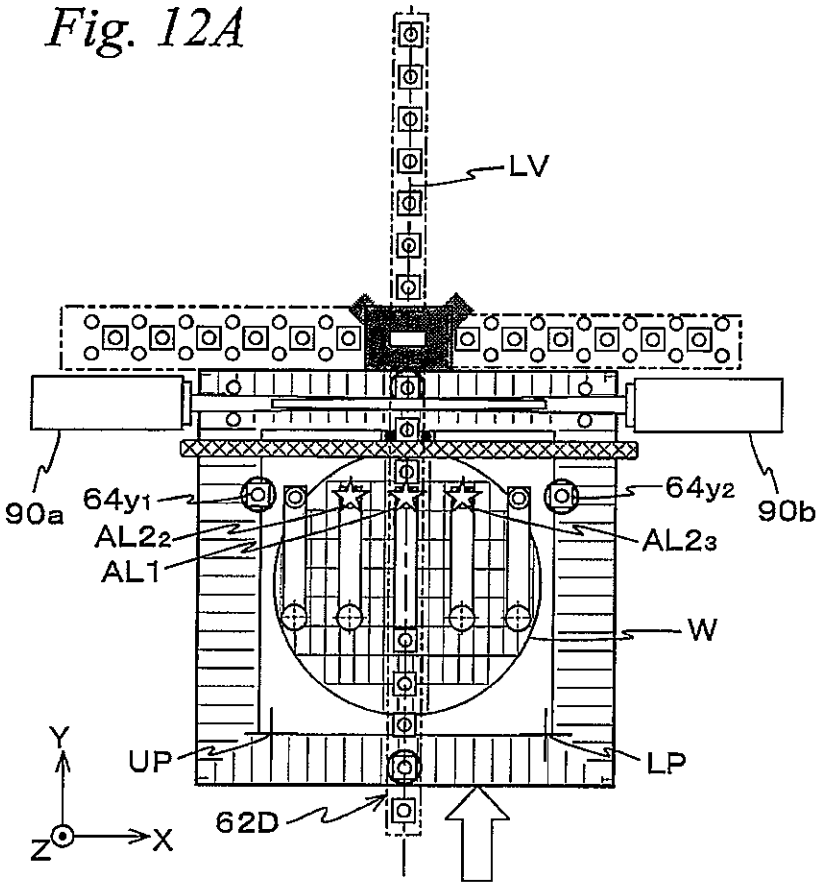

Fig. 12B

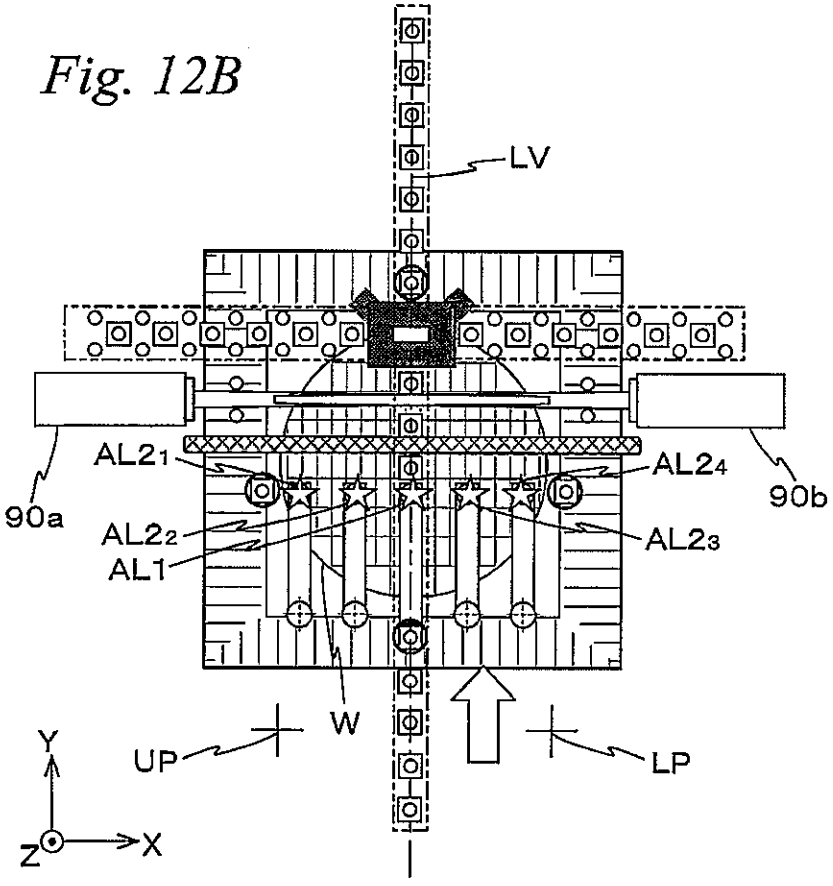

Fig. 12C

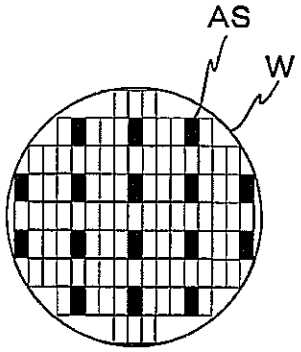

Fig. 13A

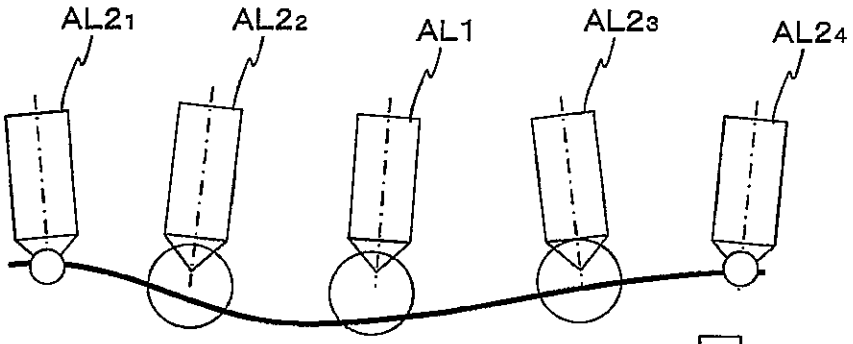

Fig. 13B

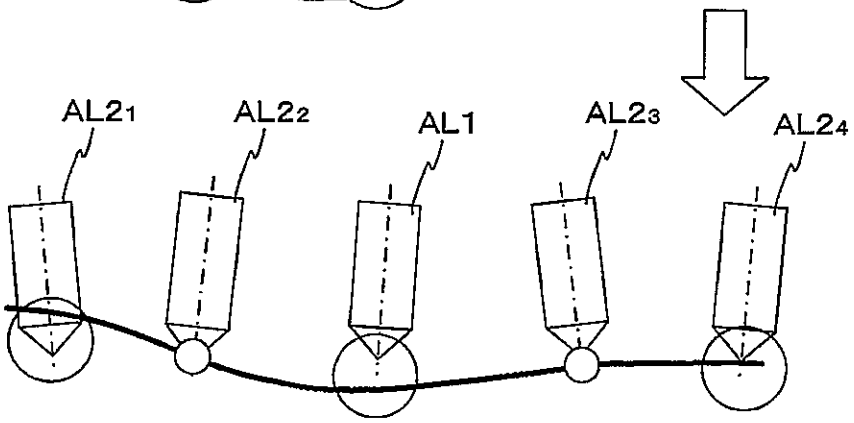

Fig. 13C

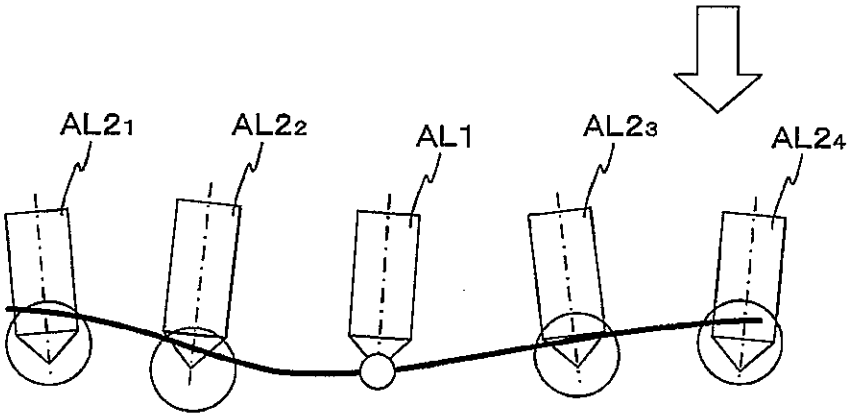

Fig. 14A

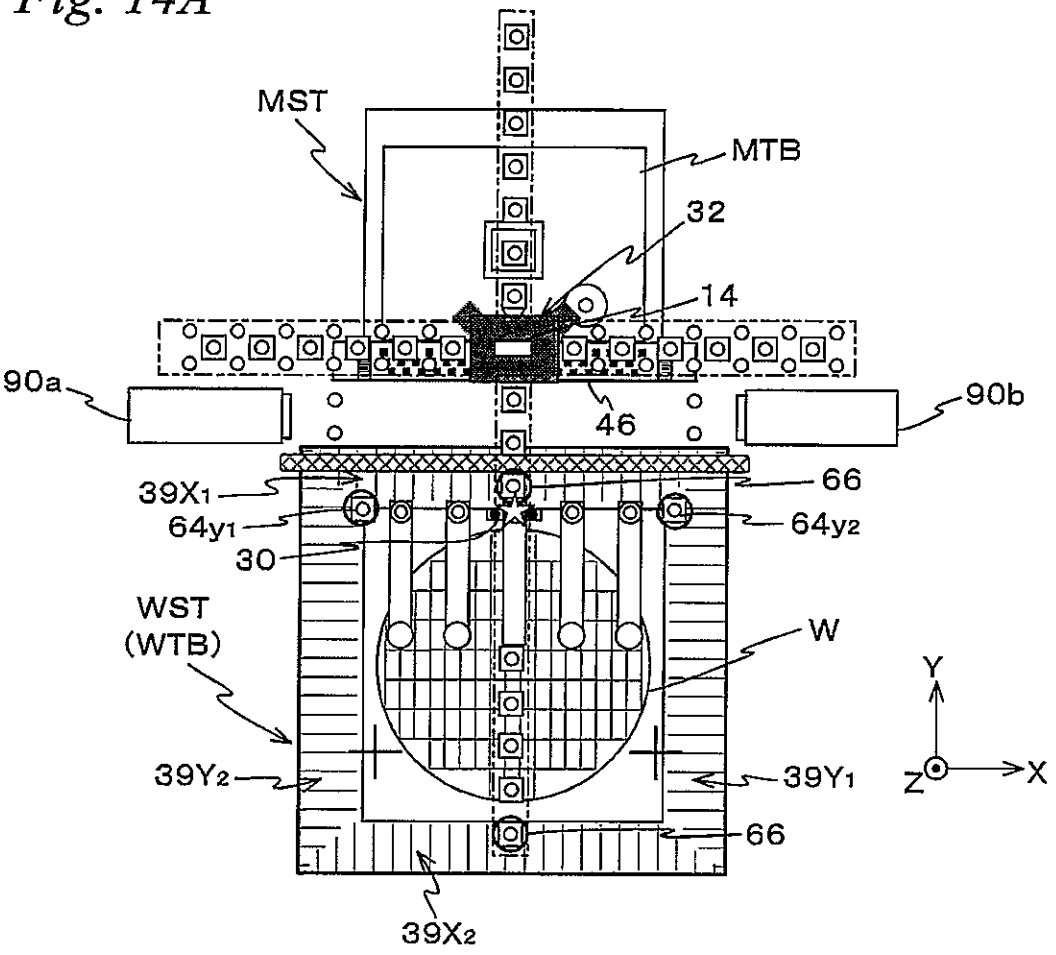

Fig. 14B

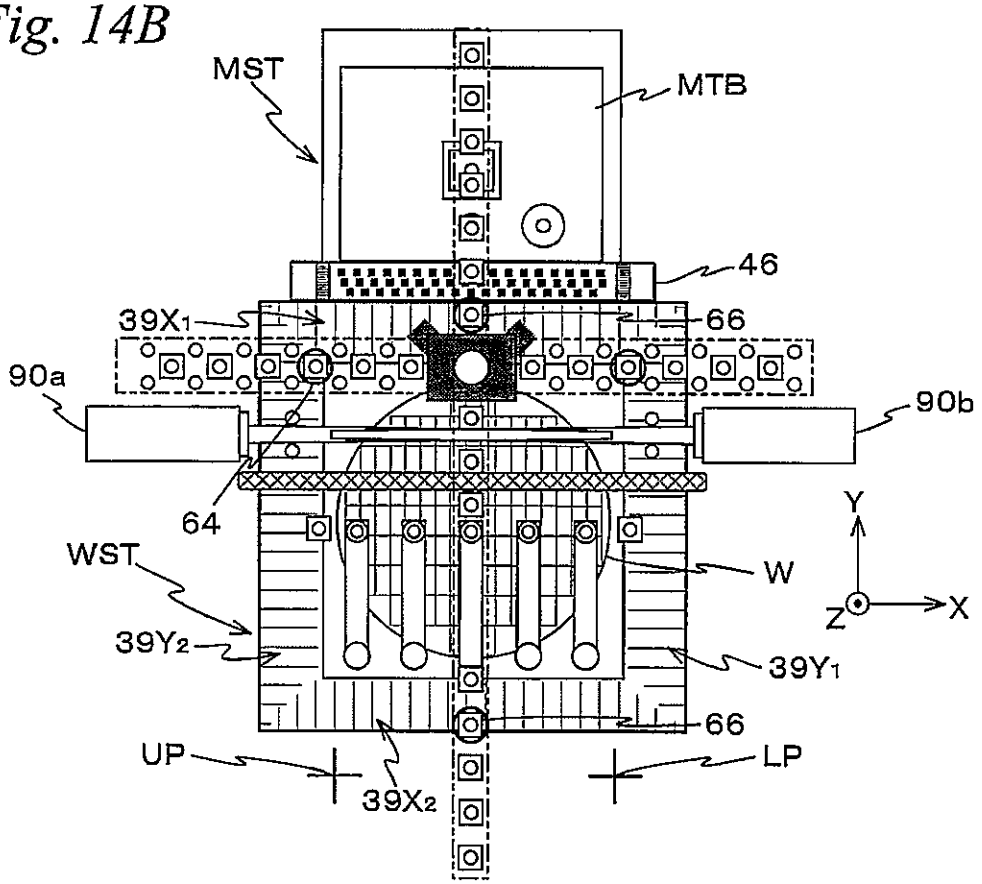

Fig. 15A

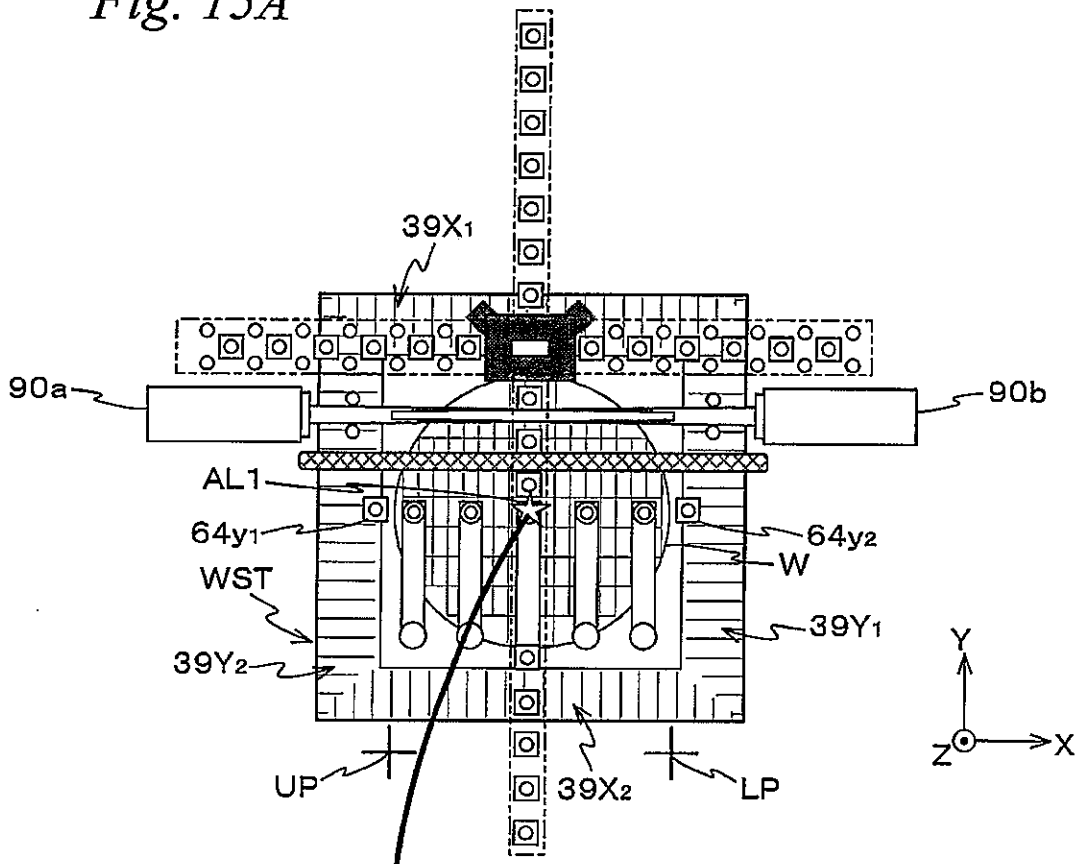

Fig. 15B

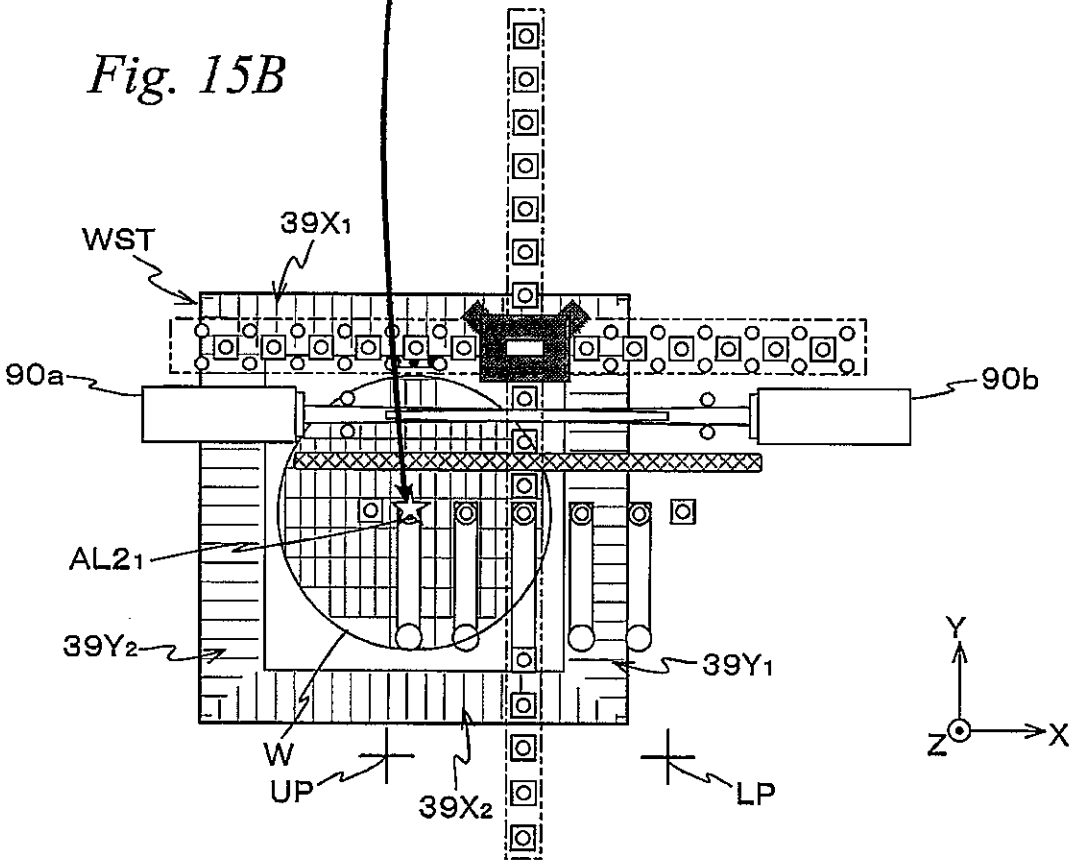

Fig. 16

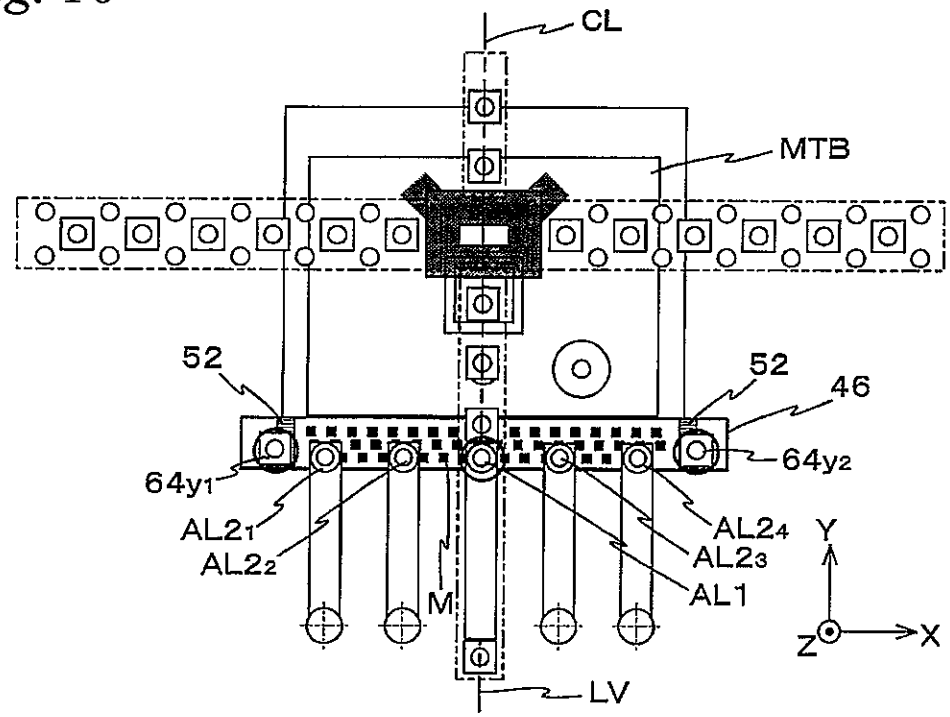

Fig. 17A

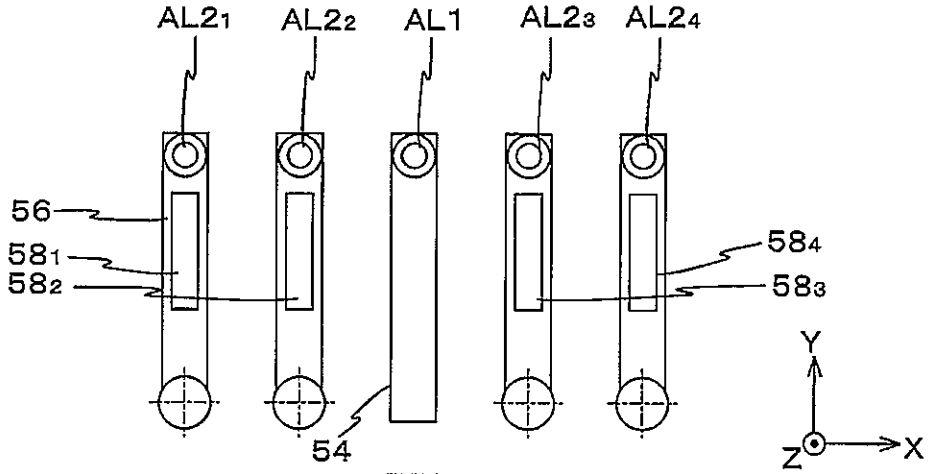

Fig. 17B

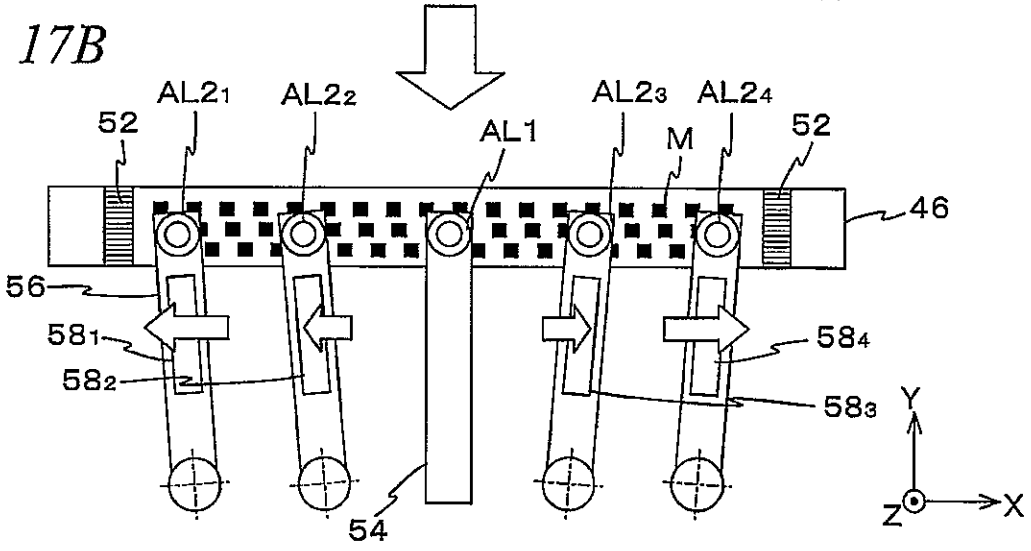

Fig. 18A

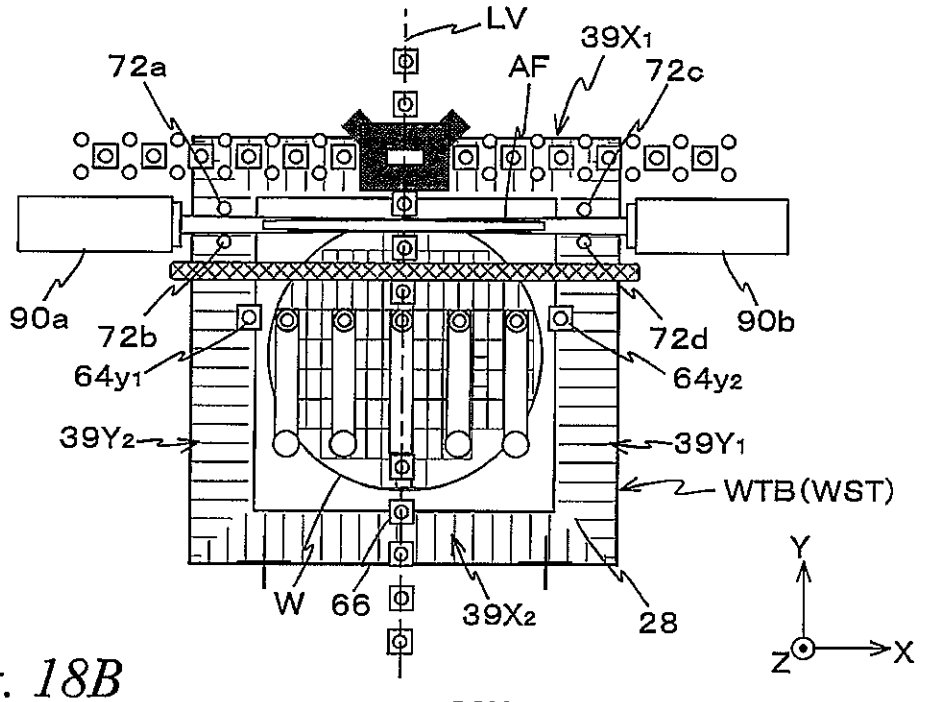

Fig. 18B

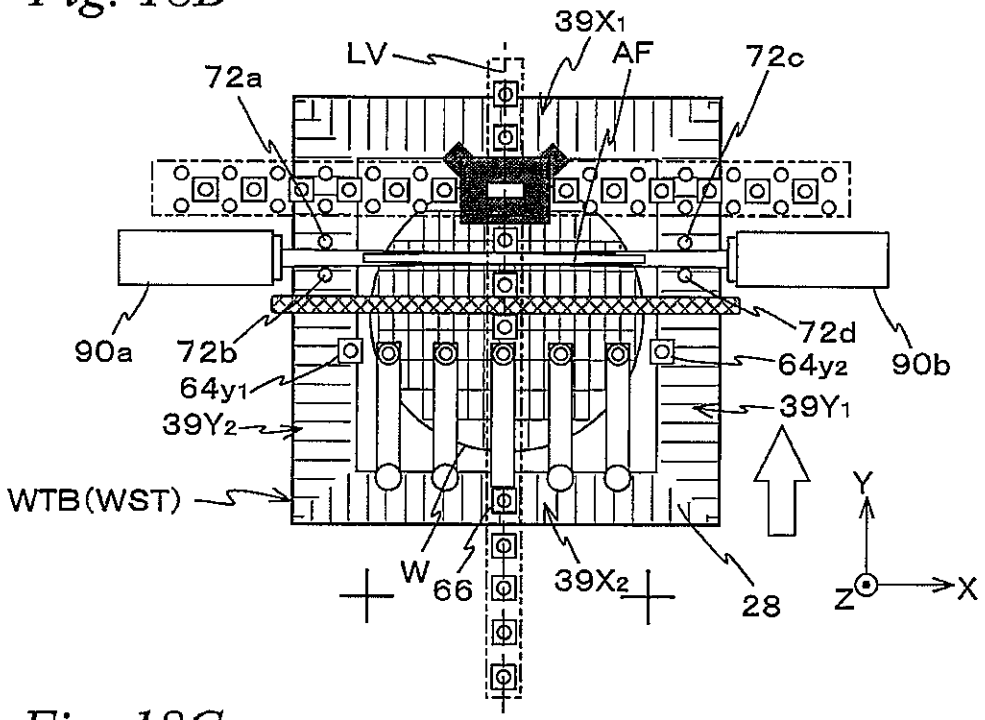

Fig. 18C

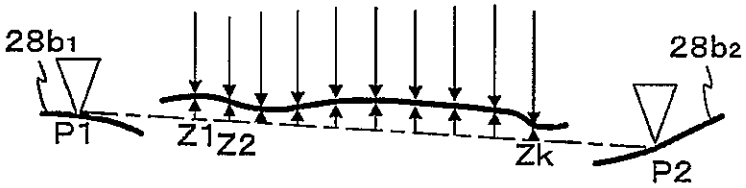

Fig. 19A

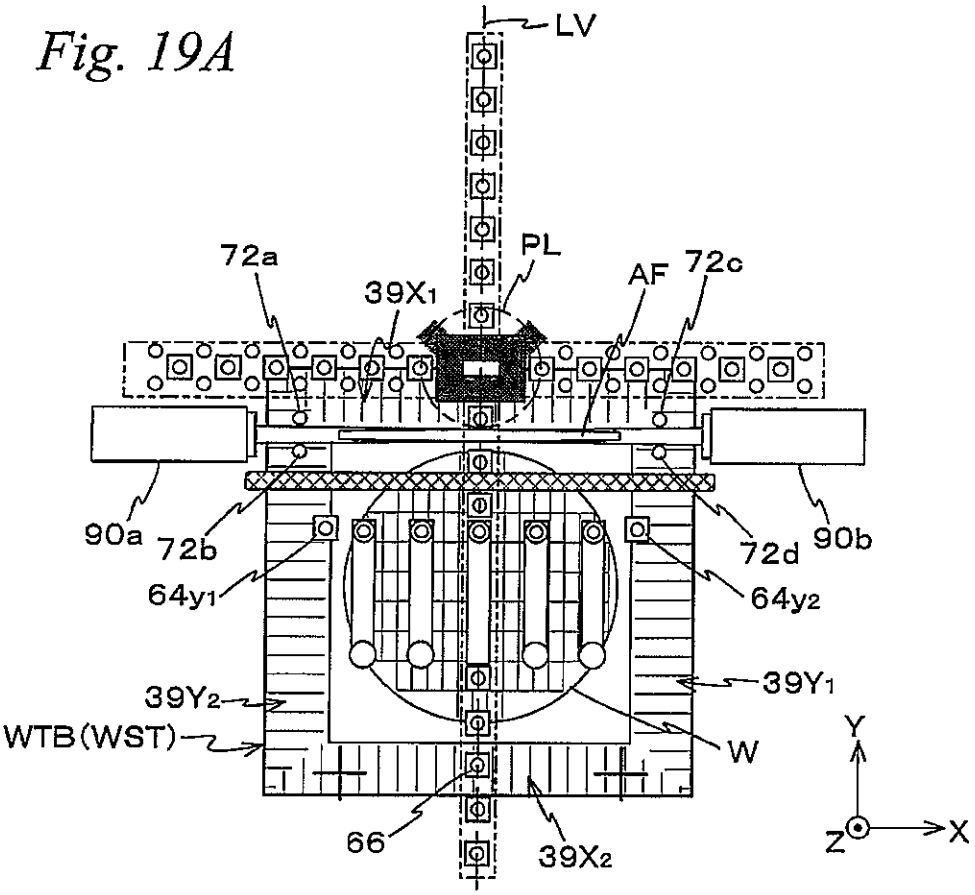

Fig. 19B

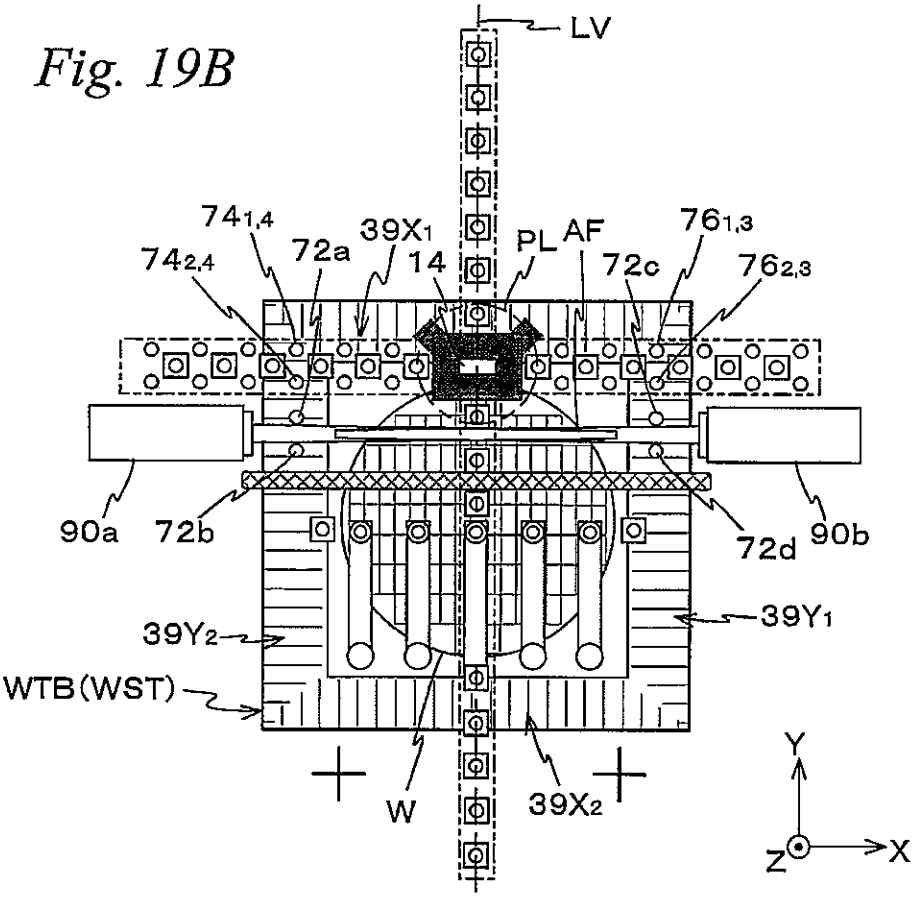

Fig. 20A

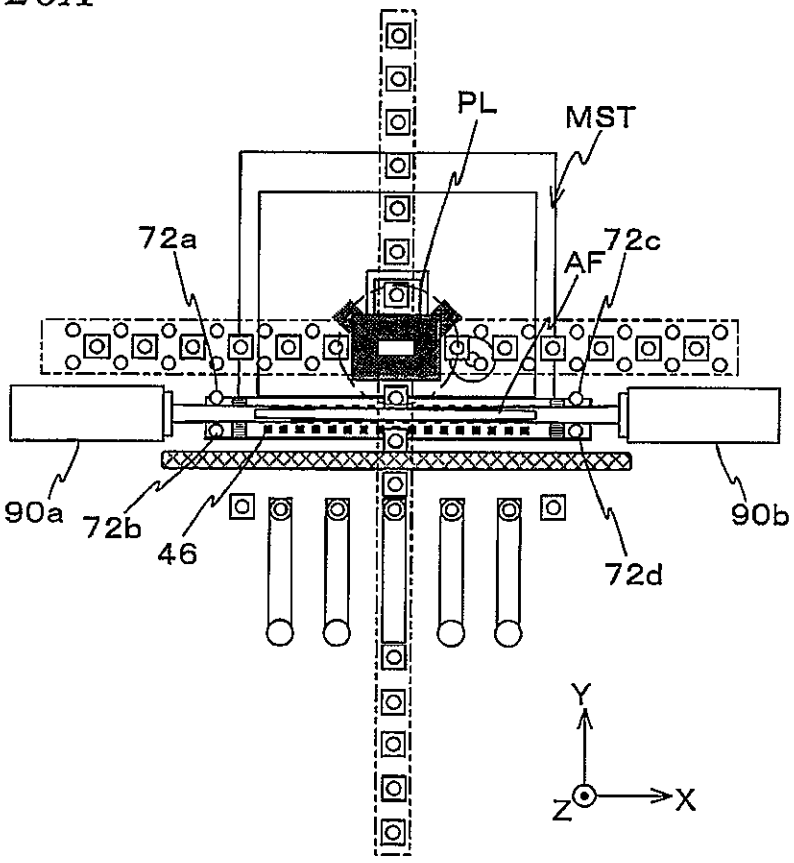

Fig. 20B

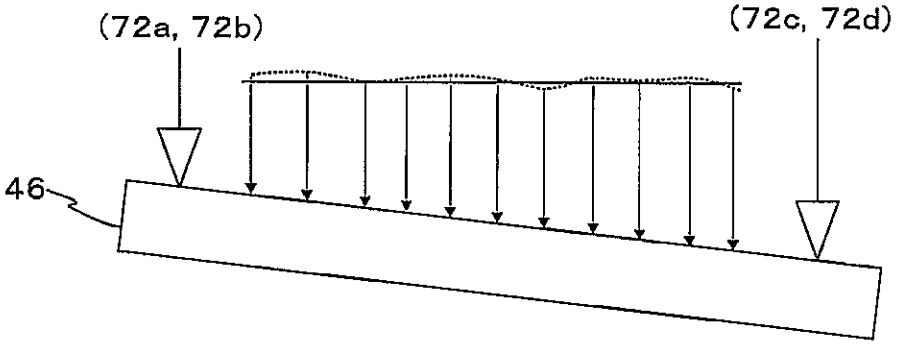

Fig. 21A

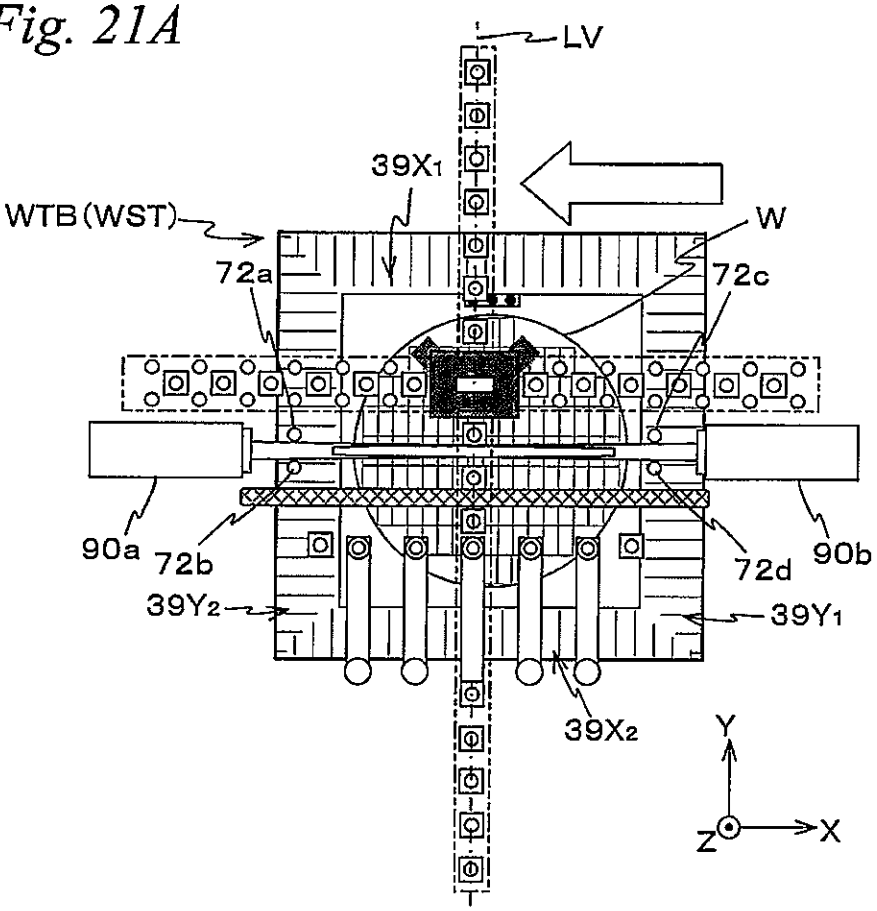

Fig. 21B

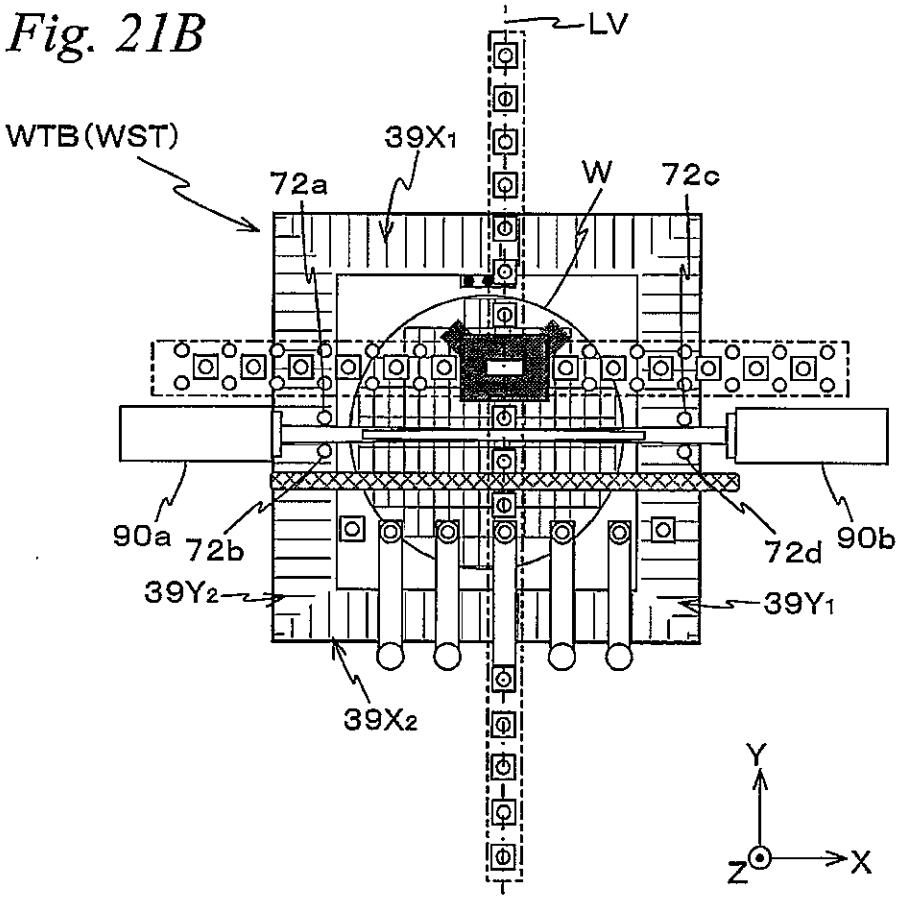

Fig. 22

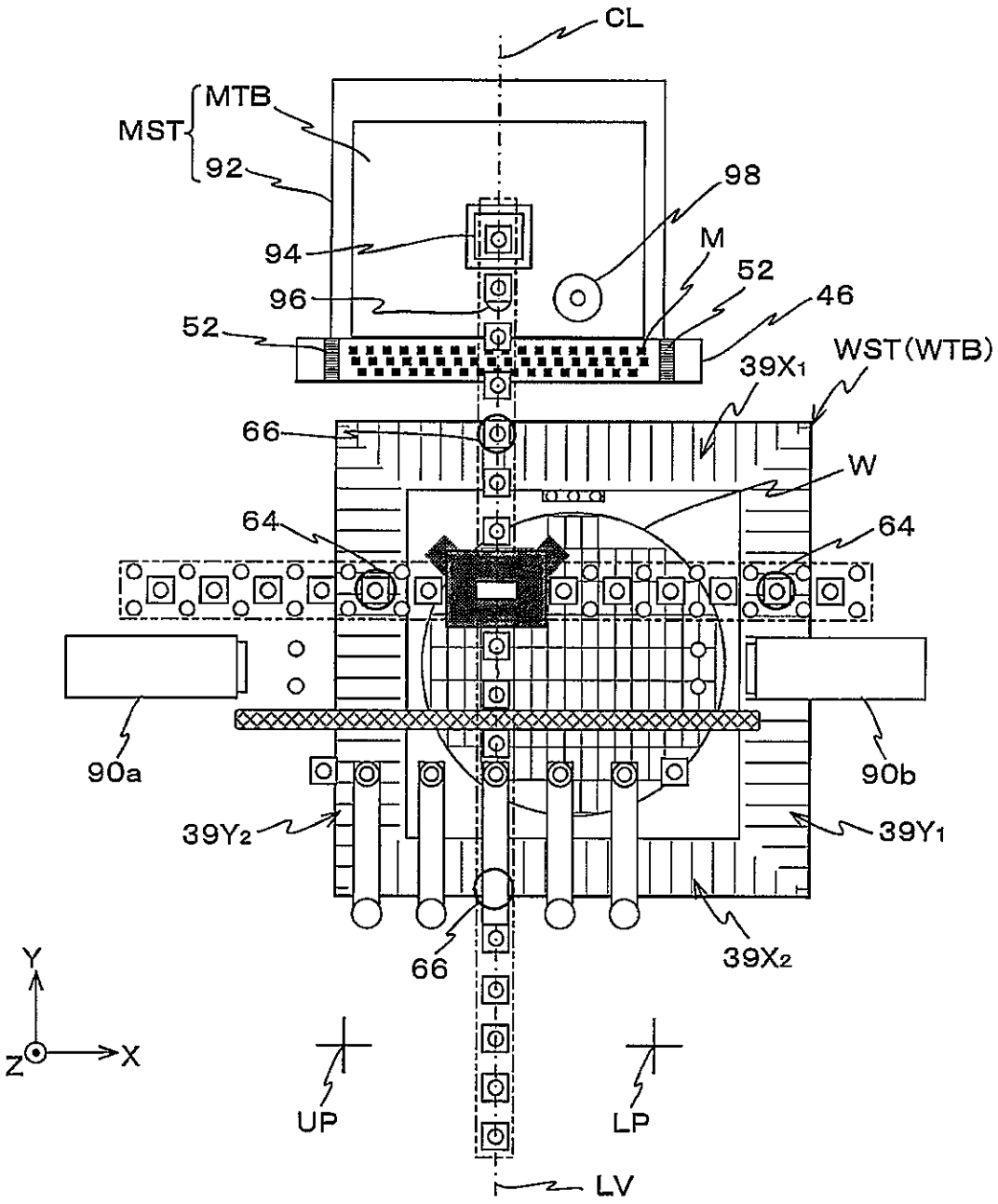
CL
MTB
MST
92
98
94
M
52
96
46
52
WST(WTB)
39X1
66
W
64
64
90a
90b
39Y2
39Y1
66
39X2
Y
Z
X
UP
LP
LV

Fig. 23

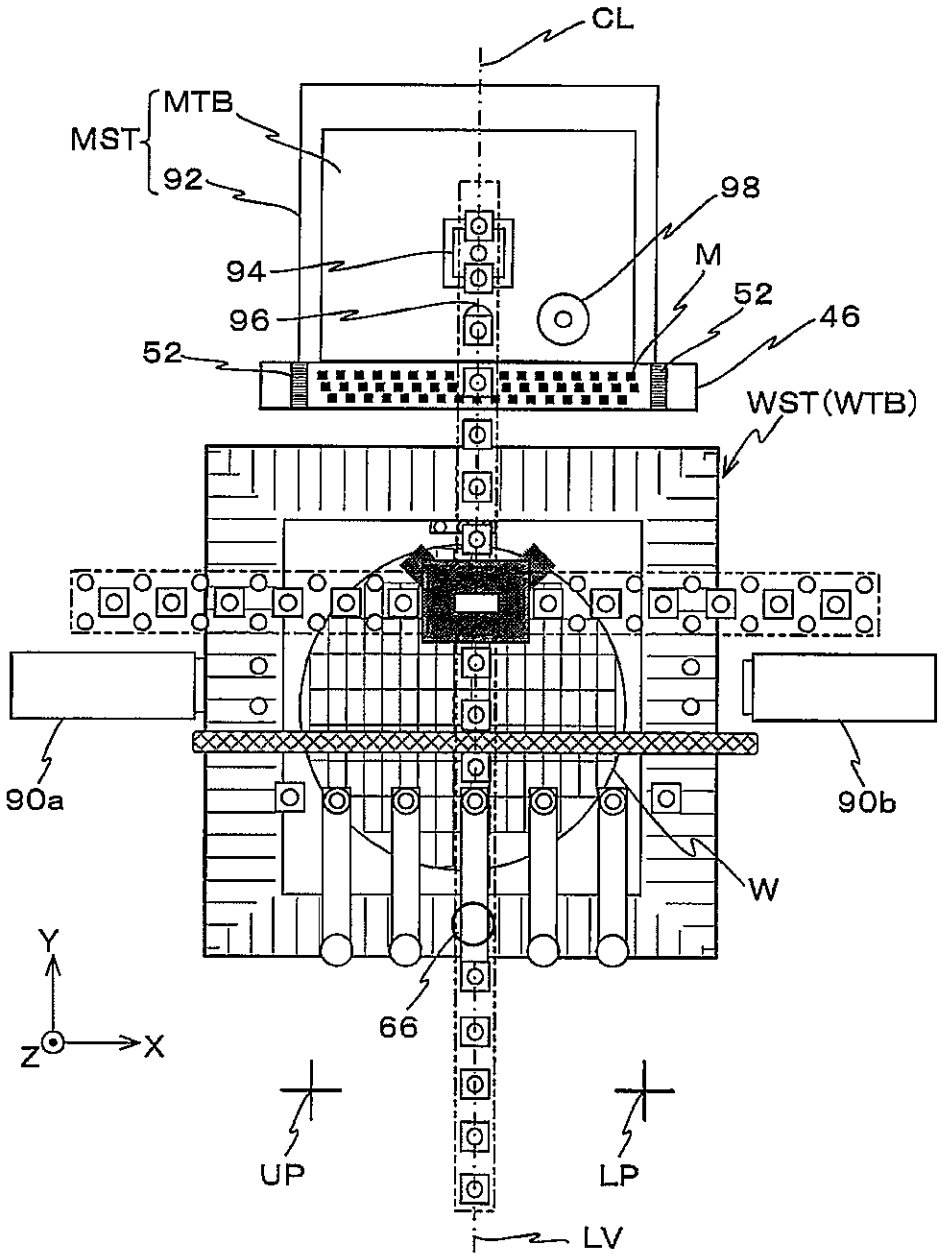

Fig. 24

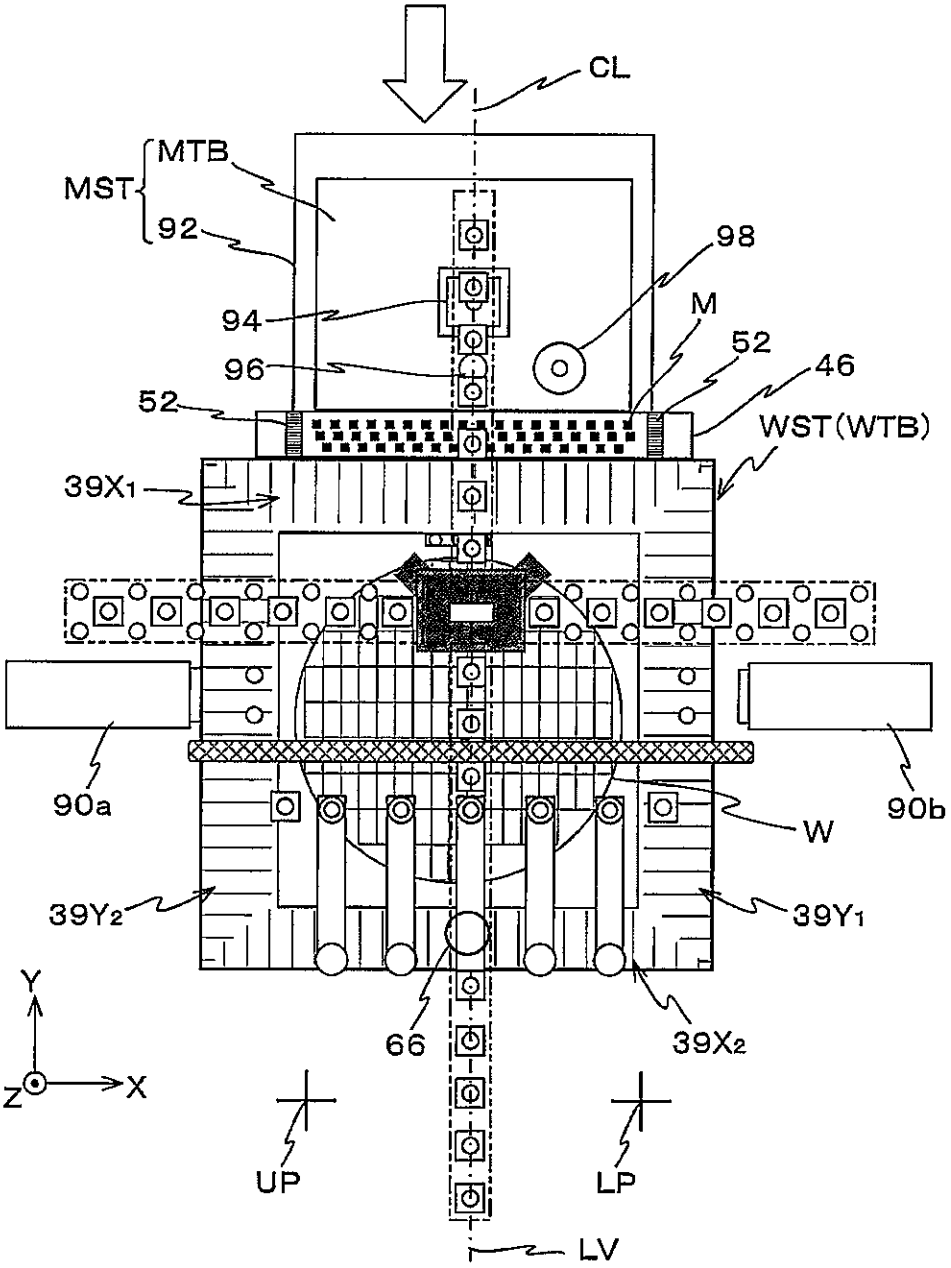
CL
MST
MTB
92
98
94
M
52
46
96
52
WST(WTB)
39X1
90a
90b
W
39Y2
39Y1
66
39X2
Y
Z
X
UP
LP
LV

Fig. 25

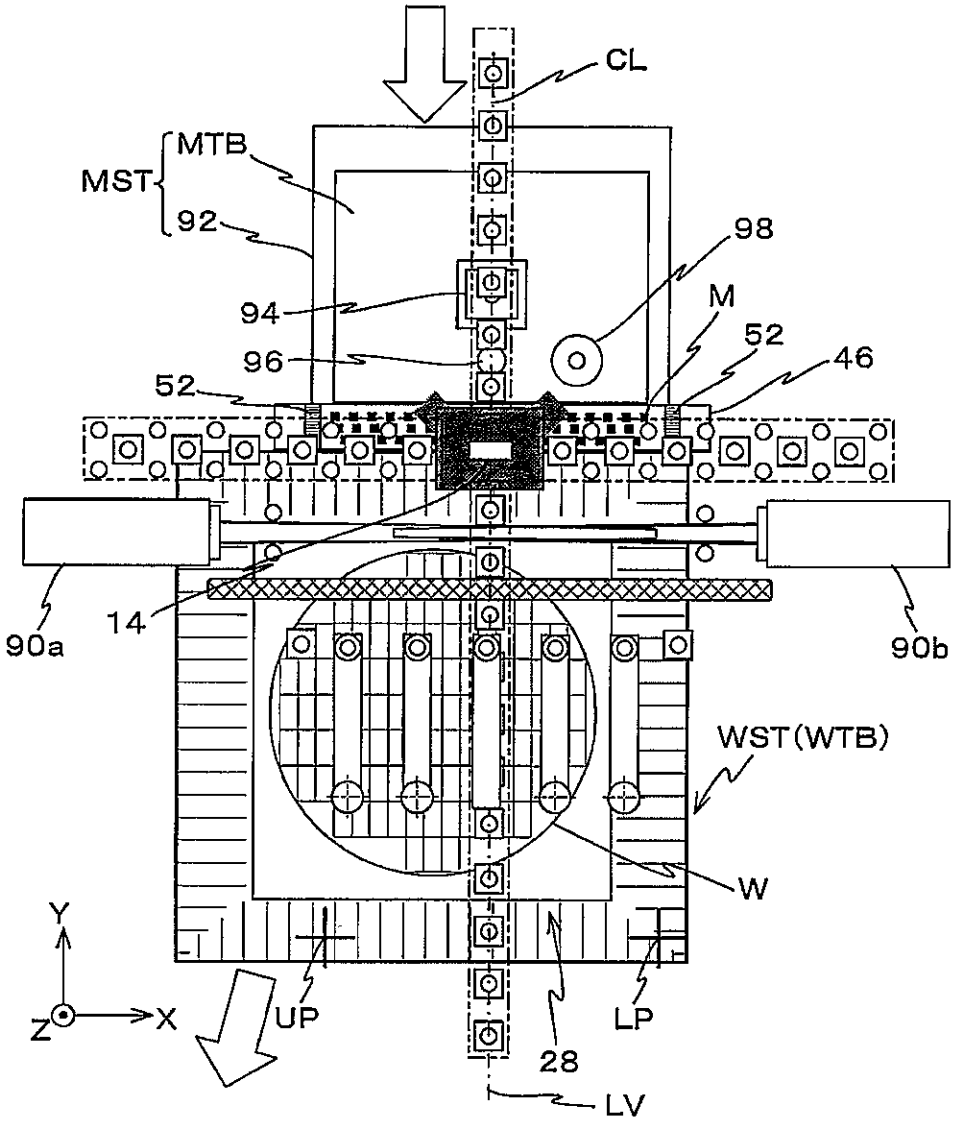

Fig. 26

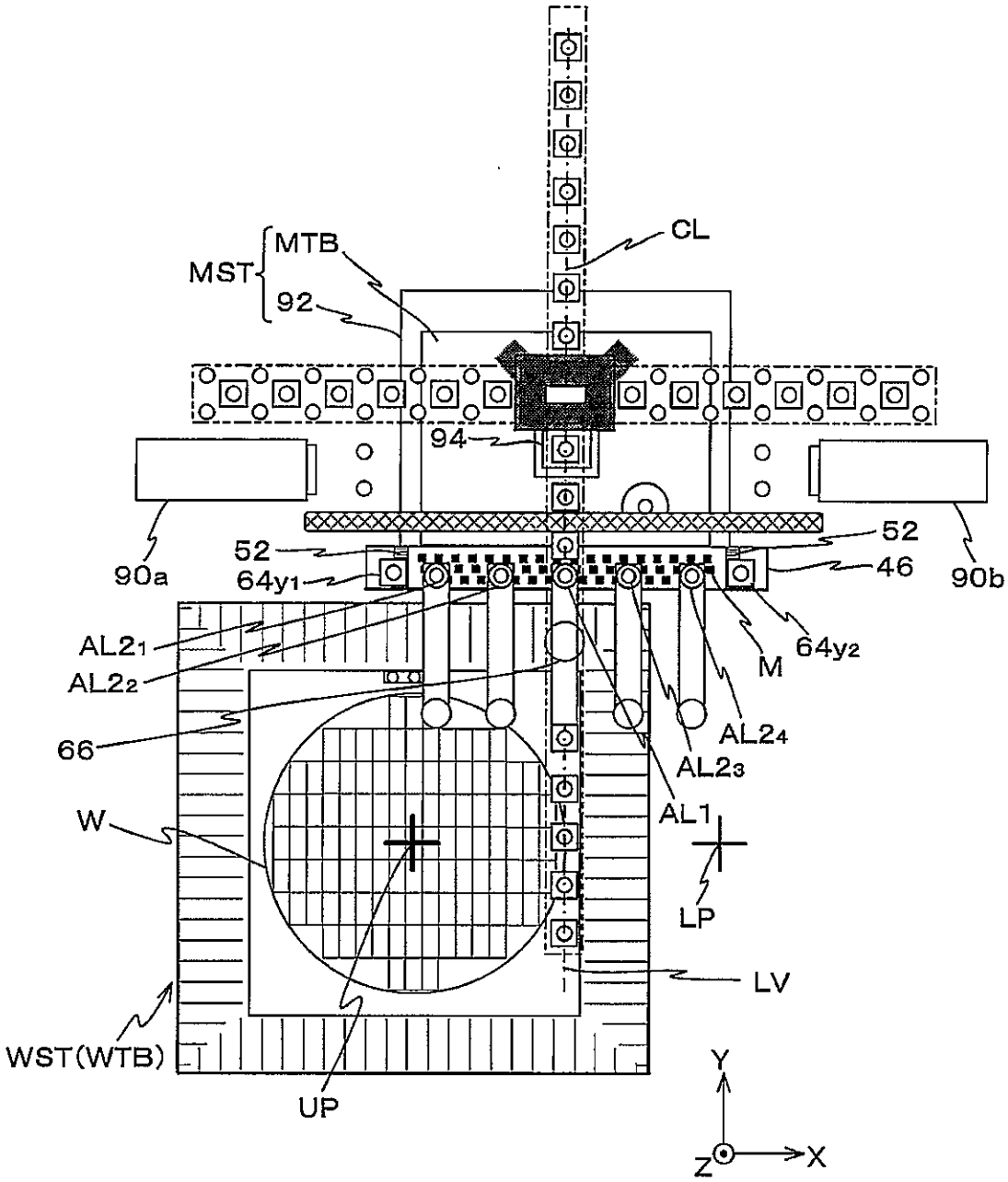
MST
MTB
92
CL
94
90a
52
64y1
52
46
90b
AL21
AL22
66
W
WST(WTB)
UP
M
64y2
AL24
AL23
AL1
LP
LV
Y
Z
X

Fig. 27

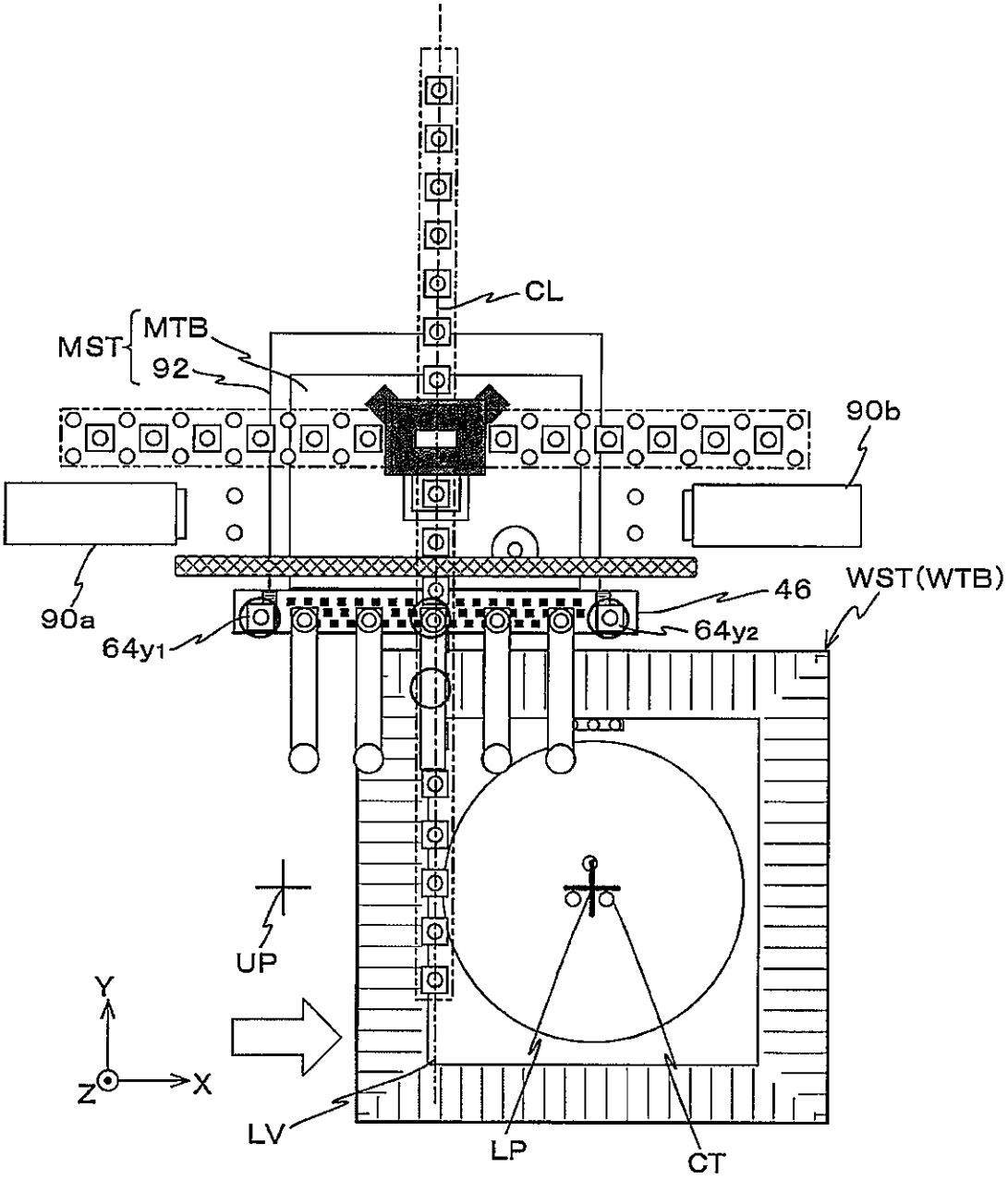

Fig. 28

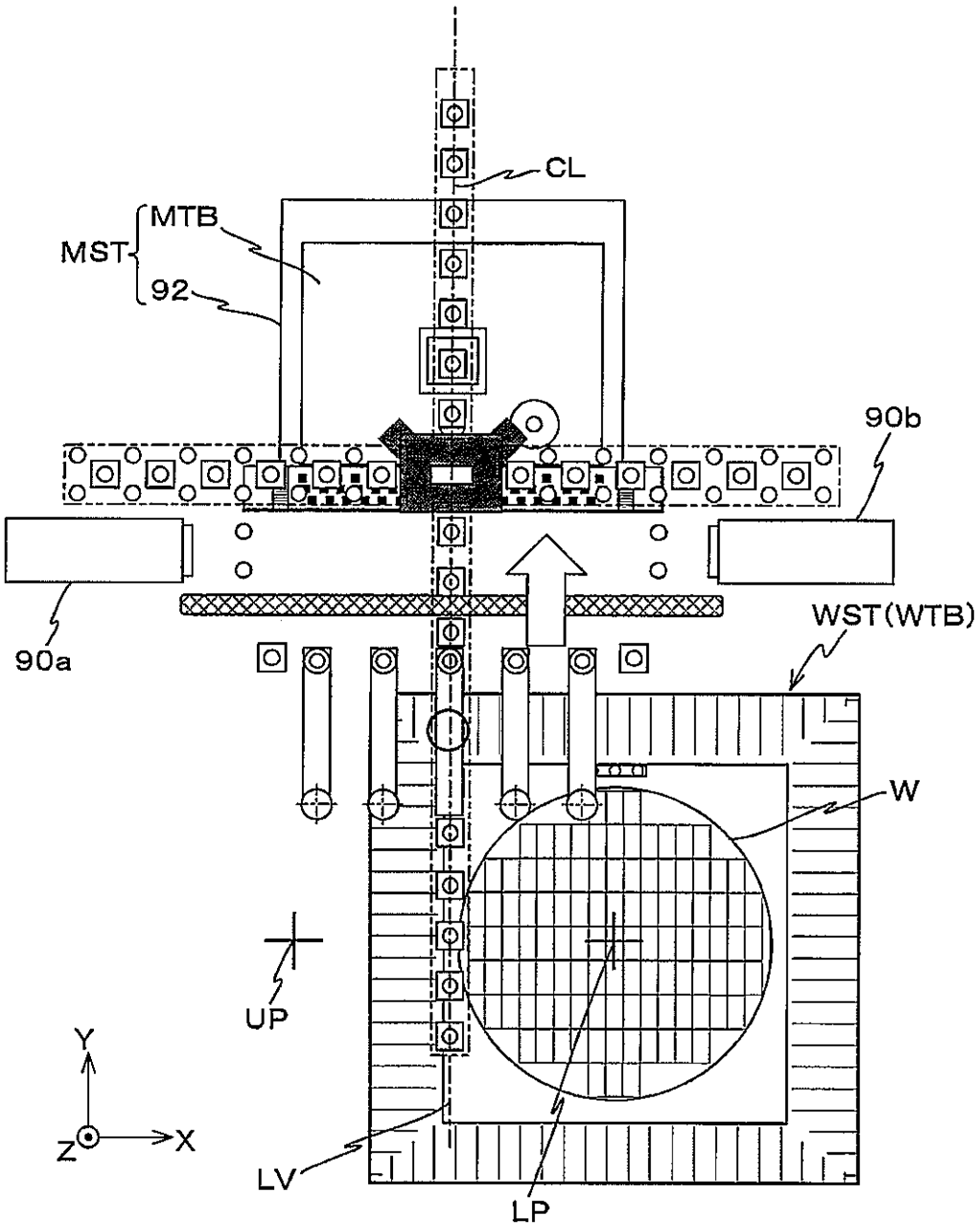

Fig. 29

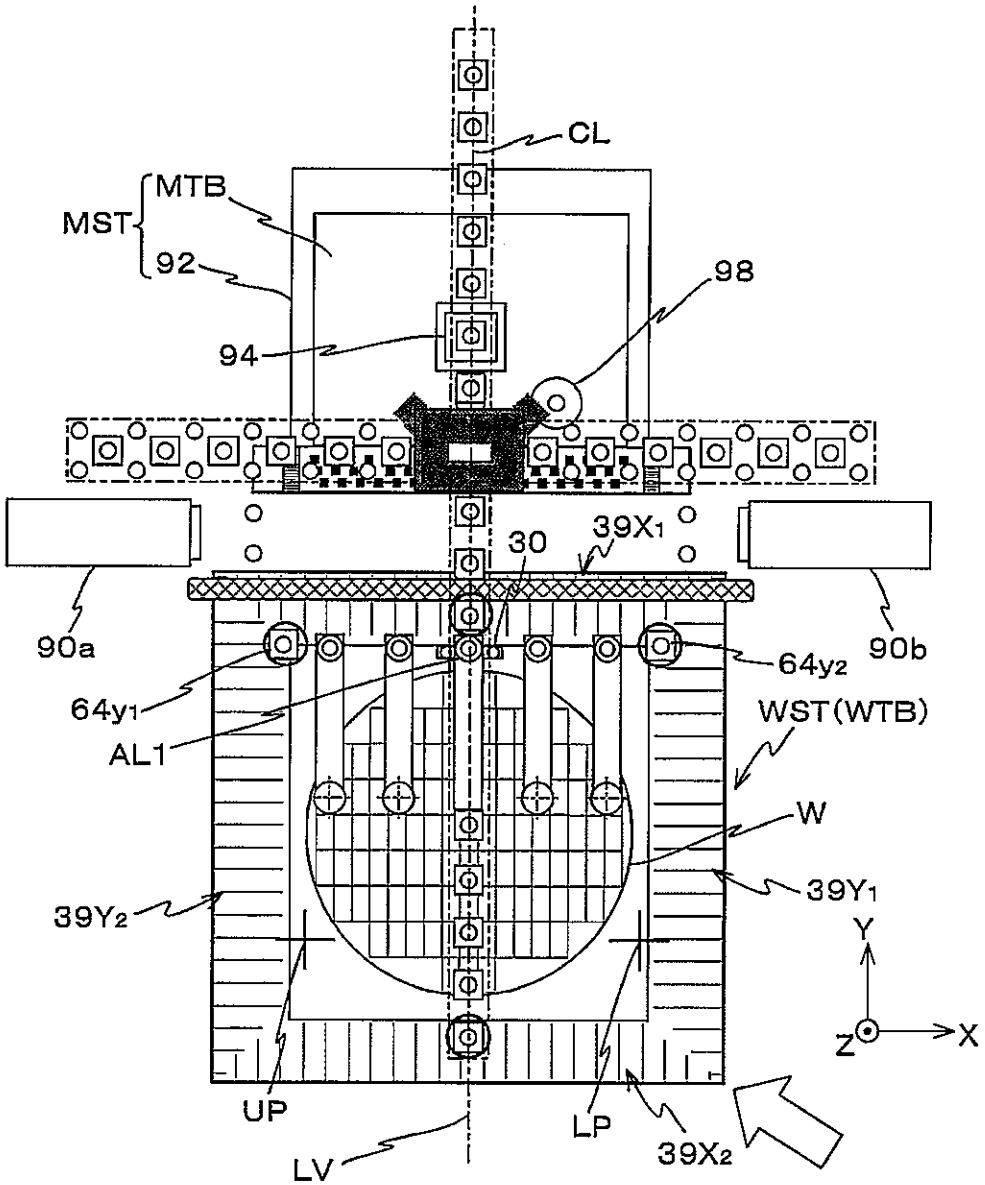
CL
MTB
MST
92
98
94
30
39X1
90a
90b
64y2
64y1
AL1
WST(WTB)
W
39Y1
39Y2
Y
Z
X
UP
LP
LV
39X2

Fig. 30

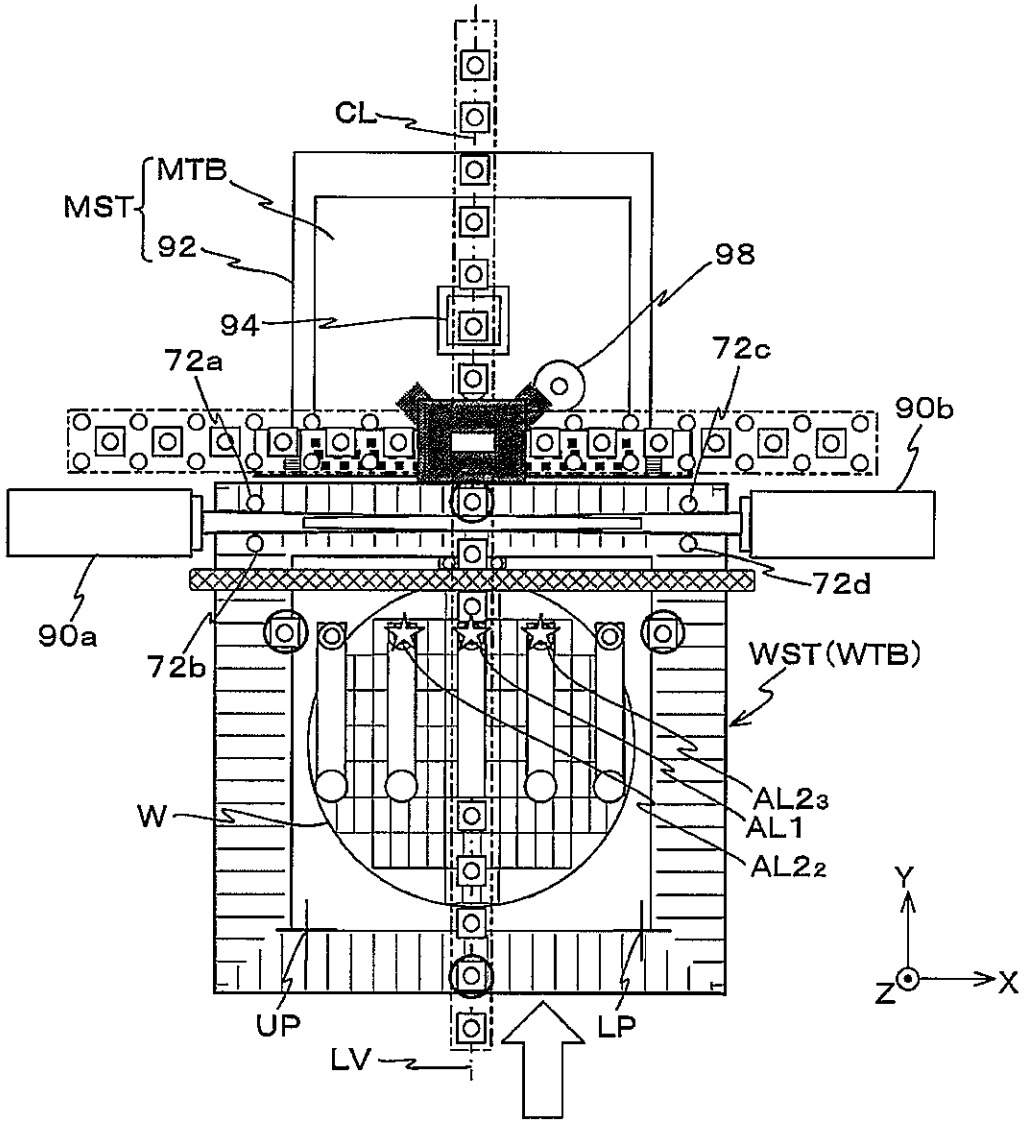
CL
MTB
MST
92
98
94
72a
72c
90b
72d
90a
72b
WST(WTB)
W
AL2₃
AL1
AL2₂
Y
Z
X
UP
LP
LV

Fig. 31

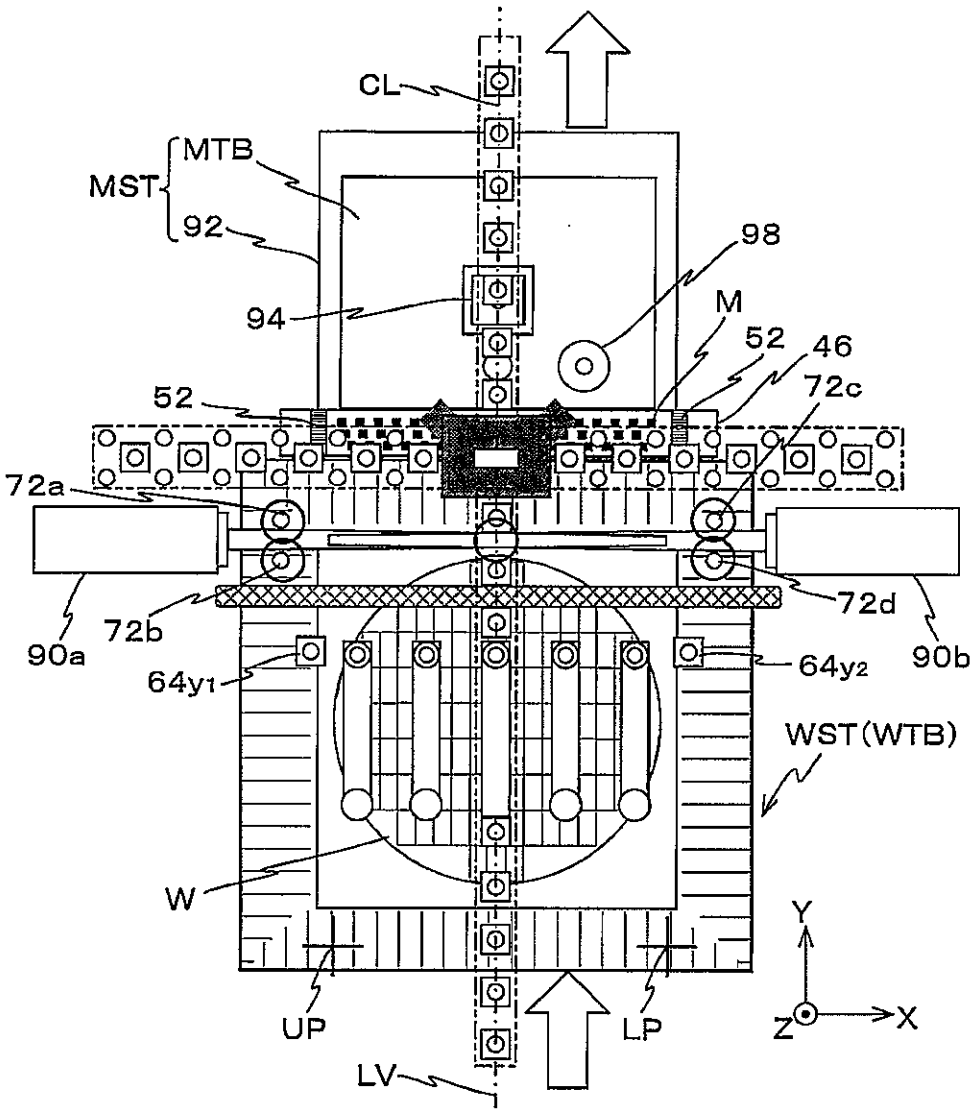
CL
MTB
MST
92
98
94
M
52
46
72c
52
72a
72d
72b
90a
90b
64y1
64y2
WST(WTB)
W
Y
Z
X
UP
LP
LV

Fig. 32

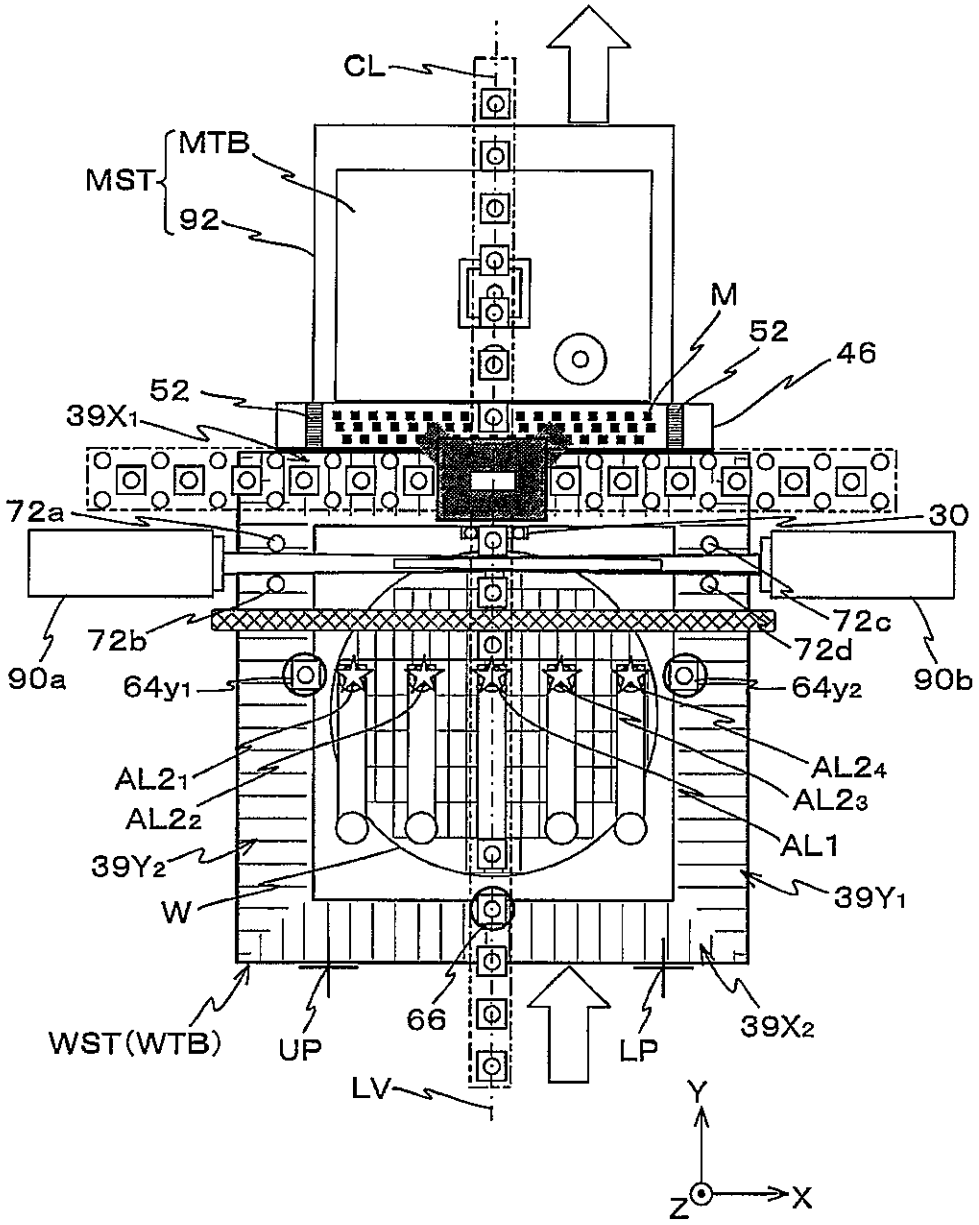
CL
MST
MTB
92
M
52
46
52
39X1
72a
30
72b
72c
72d
90a
90b
64y1
64y2
AL21
AL22
AL24
AL23
AL1
39Y2
39Y1
W
WST(WTB)
UP
66
LP
39X2
LV
Y
Z
X

Fig. 33

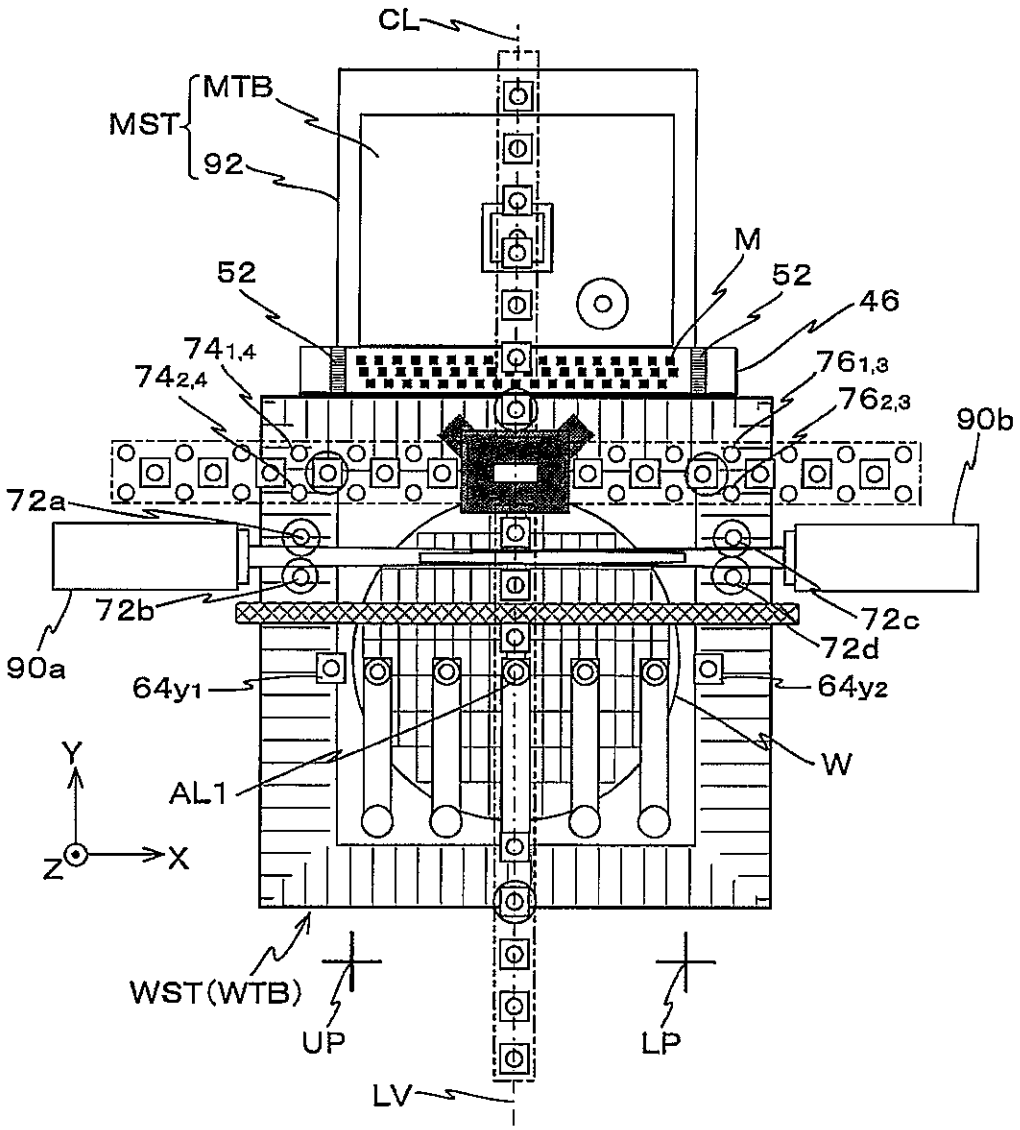
CL
MST
MTB
92
52
M
52
46
$74_{1,4}$
$74_{2,4}$
$76_{1,3}$
$76_{2,3}$
90b
72a
72b
72c
72d
90a
$64y_1$
$64y_2$
W
AL1
Y
Z
X
WST(WTB)
UP
LP
LV

Fig. 34

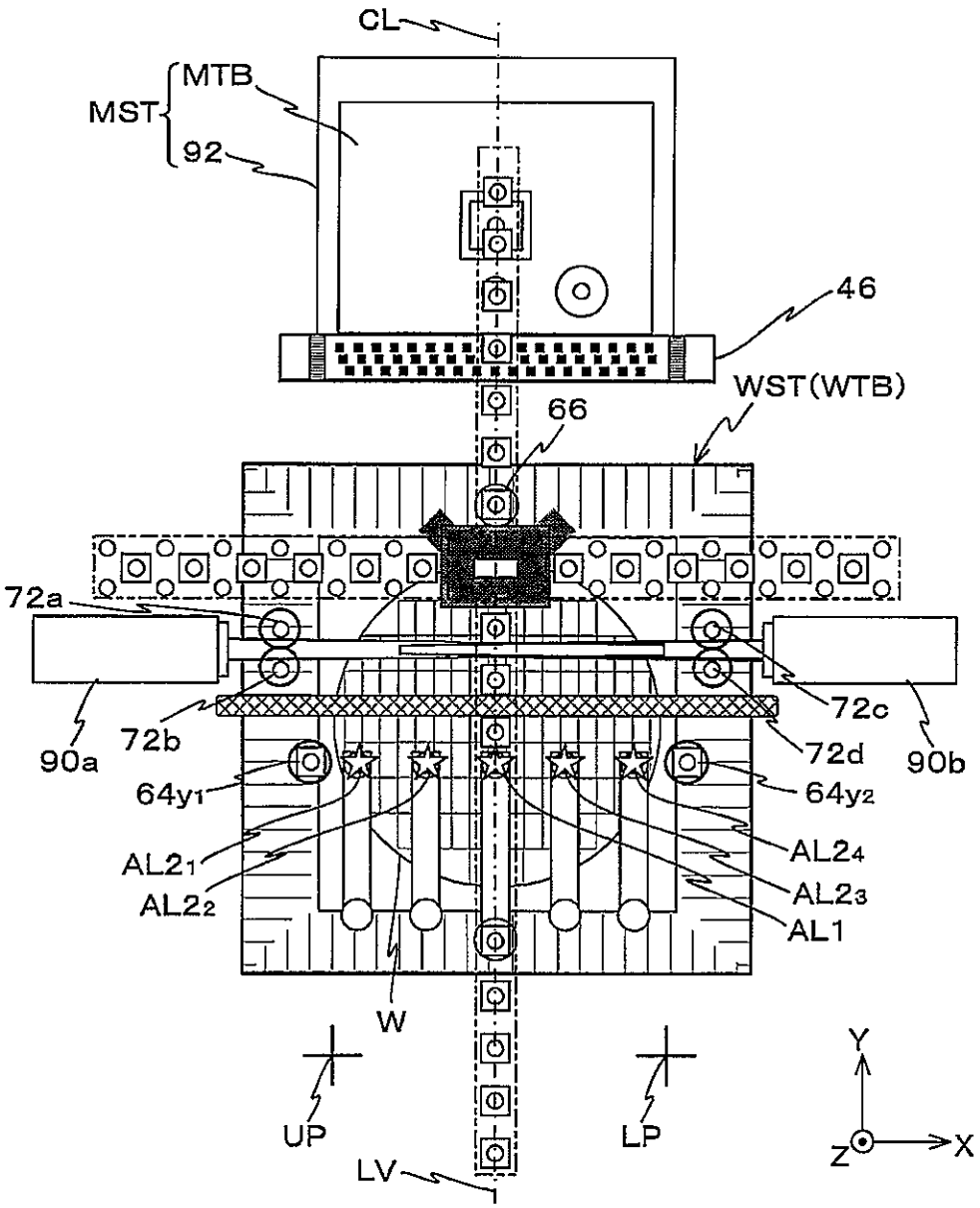
CL
MTB
MST
92
46
WST(WTB)
66
72a
72b
72c
72d
90a
90b
64y1
64y2
AL21
AL22
AL24
AL23
AL1
W
UP
LP
LV
Y
X
Z

Fig. 35

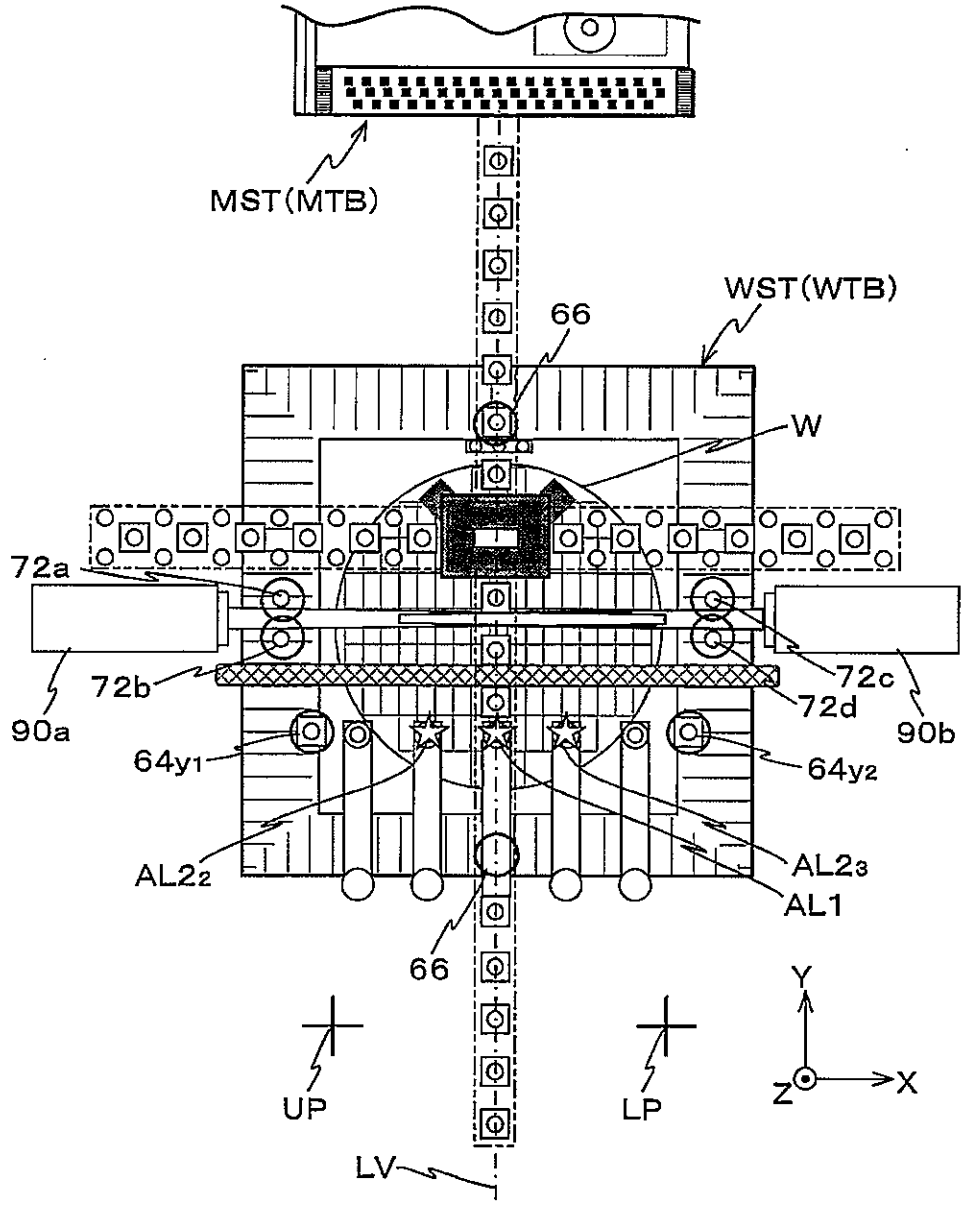
MST(MTB)
WST(WTB)
66
W
72a
72b
72c
72d
90a
90b
64y1
64y2
AL22
AL23
AL1
66
UP
LP
LV
Y
Z
X

Fig. 36

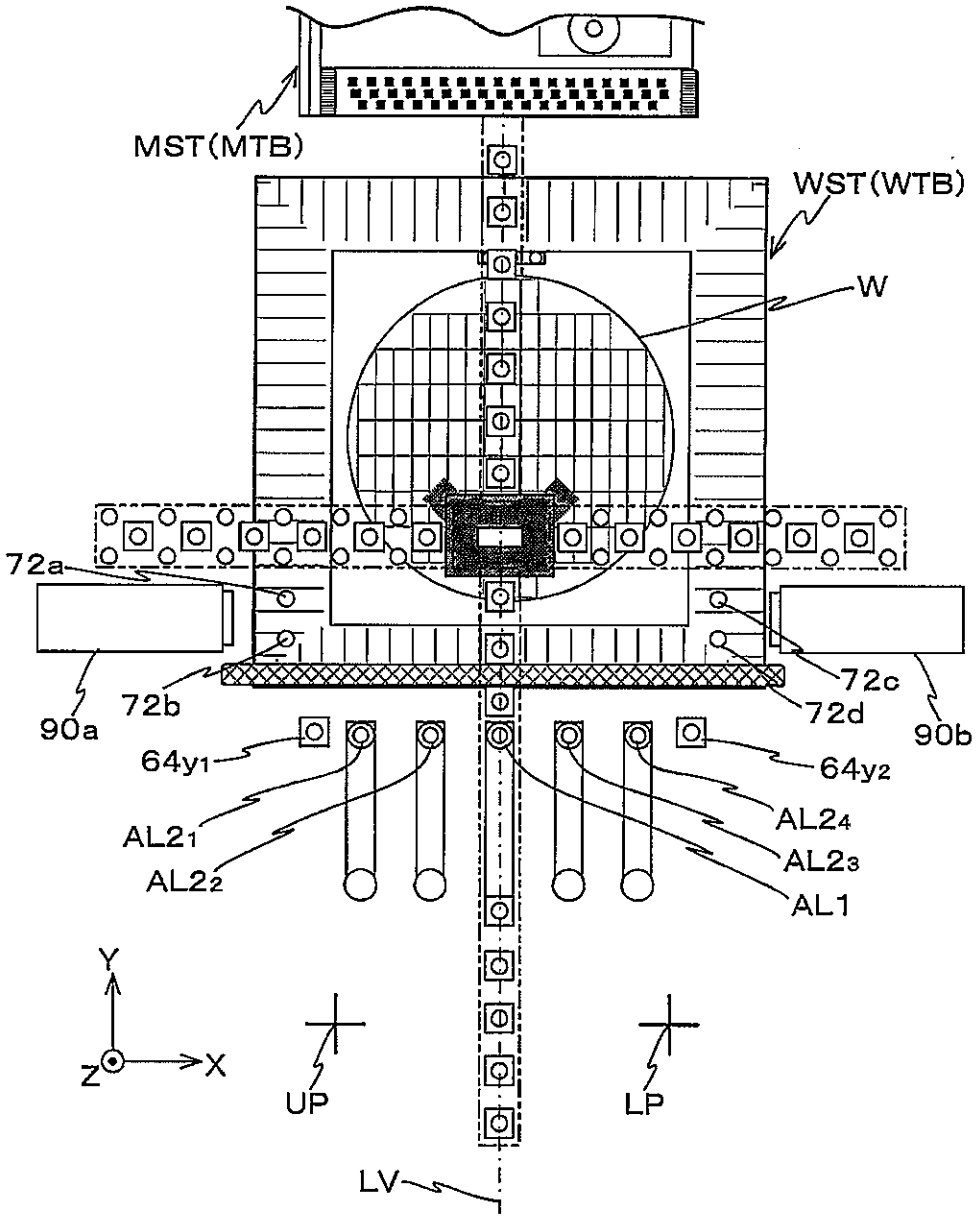
MST(MTB)
WST(WTB)
W
72a
72b
72c
72d
90a
90b
64y1
64y2
AL21
AL22
AL24
AL23
AL1
Y
Z
X
UP
LP
LV

Fig. 37

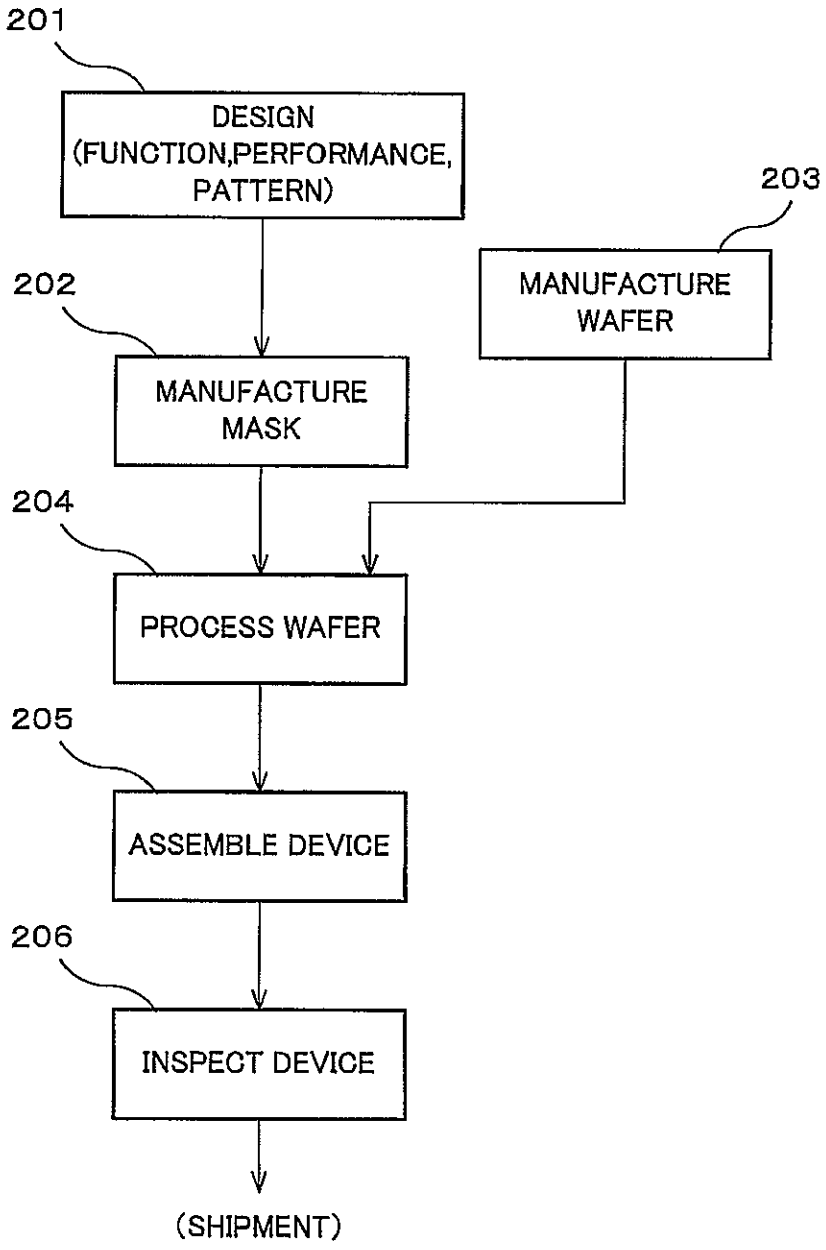
201
DESIGN
(FUNCTION,PERFORMANCE,
PATTERN)
203
MANUFACTURE
WAFER
202
MANUFACTURE
MASK
204
PROCESS WAFER
205
ASSEMBLE DEVICE
206
INSPECT DEVICE
(SHIPMENT)

Fig. 38

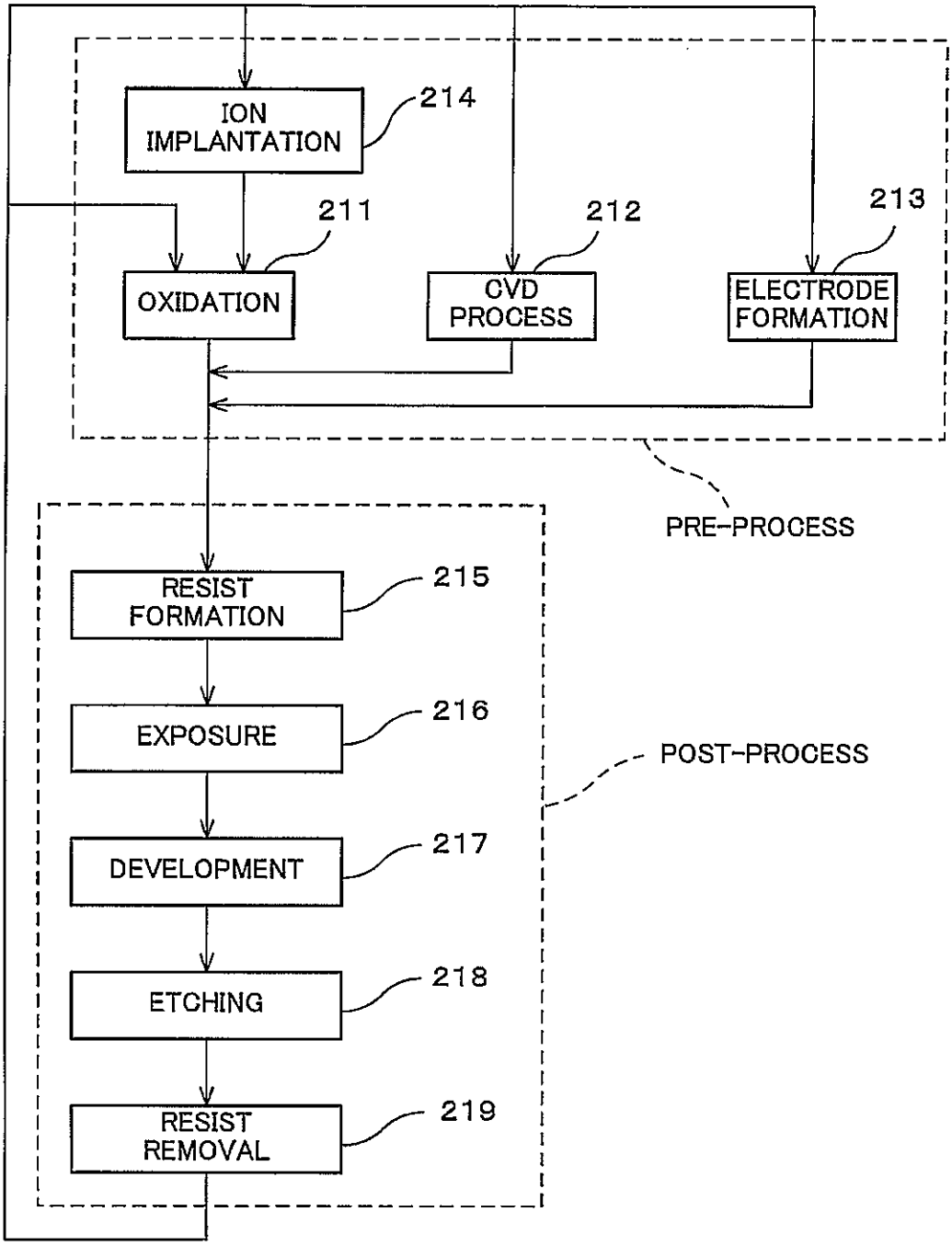
ION IMPLANTATION
214
211
212
213
OXIDATION
CVD PROCESS
ELECTRODE FORMATION
PRE-PROCESS
RESIST FORMATION
215
EXPOSURE
216
POST-PROCESS
DEVELOPMENT
217
ETCHING
218
RESIST REMOVAL
219