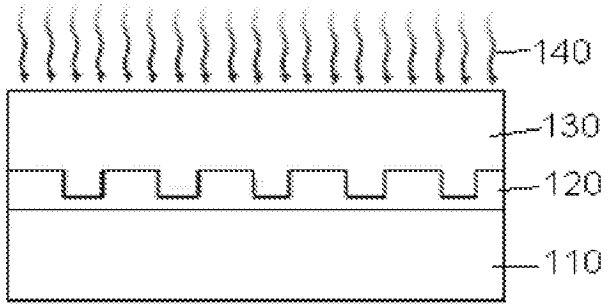

Fig. 1a

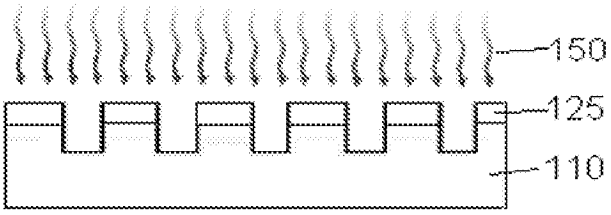

Fig. 1b

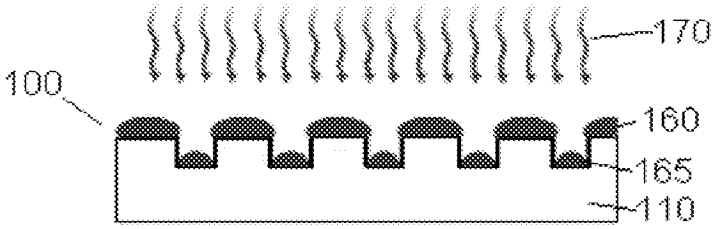

Fig. 1c

Fig. 1

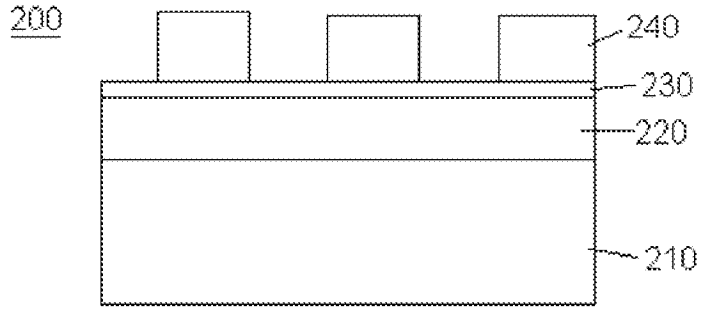

Fig. 2a

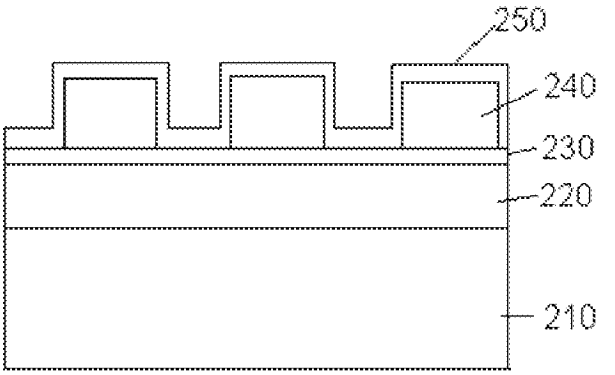

Fig 2b

Fig. 2

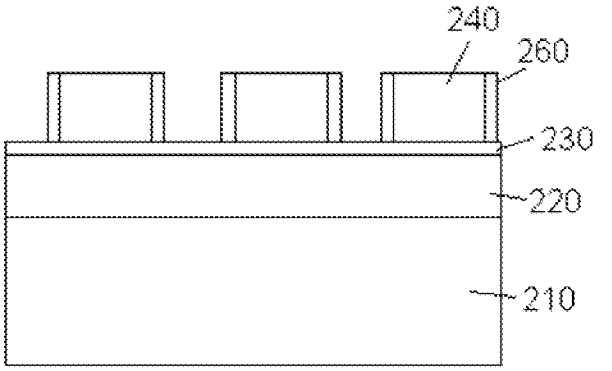

Fig. 2c

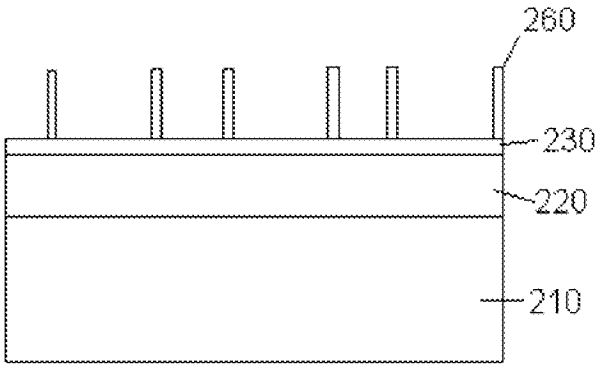

Fig. 2d

Fig. 2

205

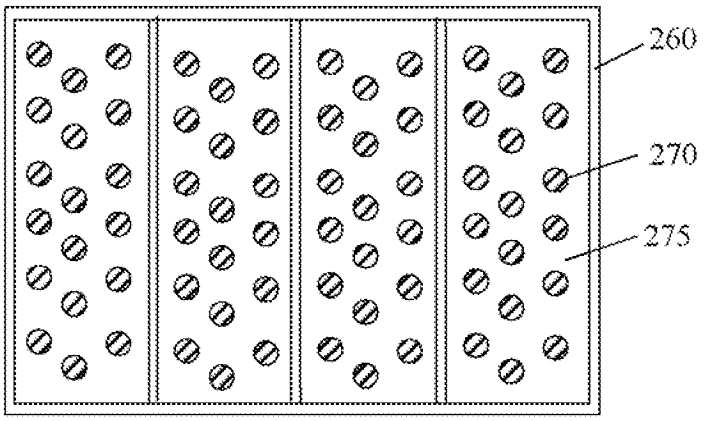

Fig. 3

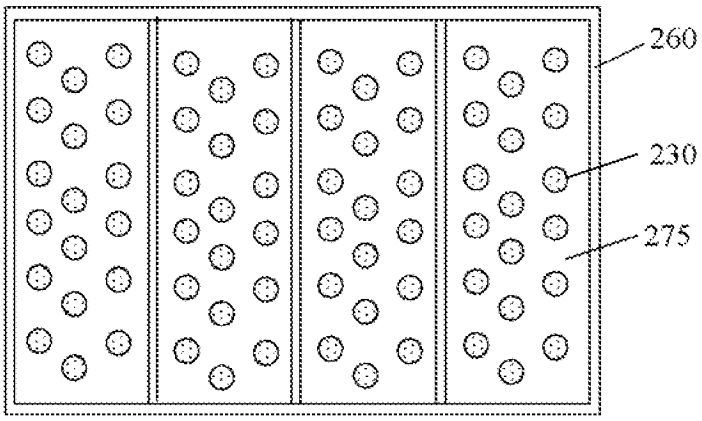

Fig. 4

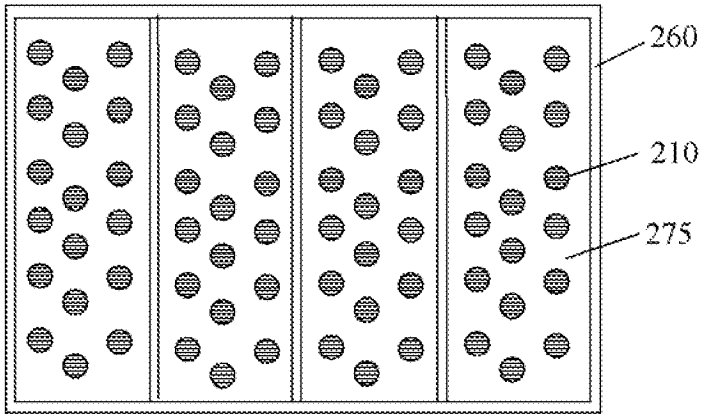

Fig. 5

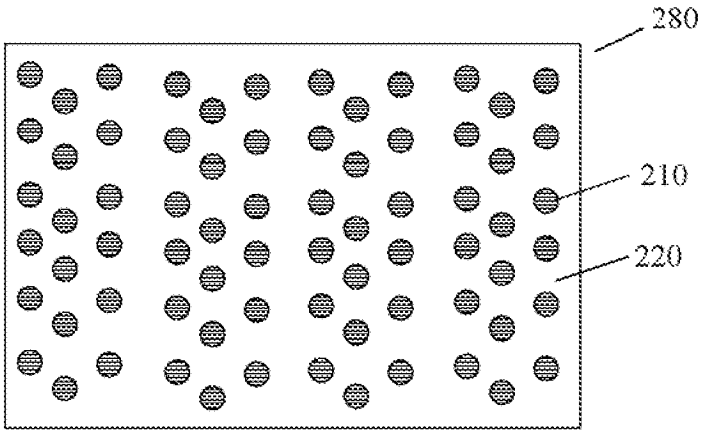

Fig. 6

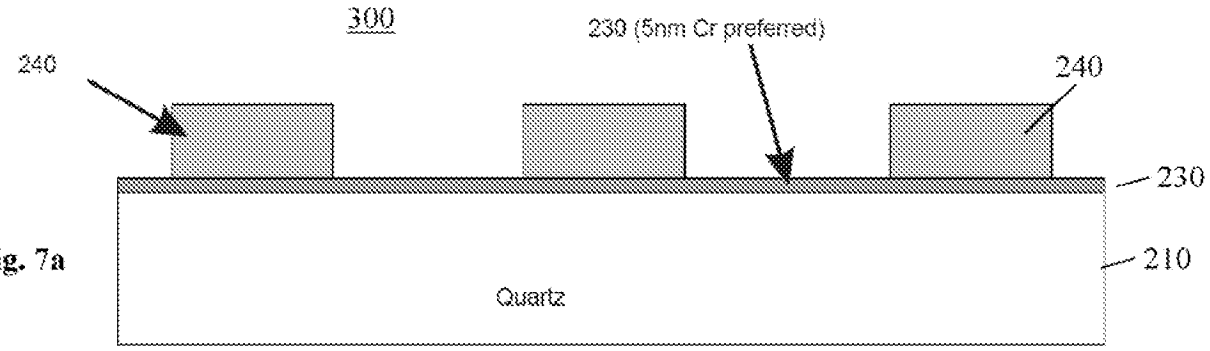

Fig. 7a

1) Starting substrate and layers (use same numbering as disclosure)

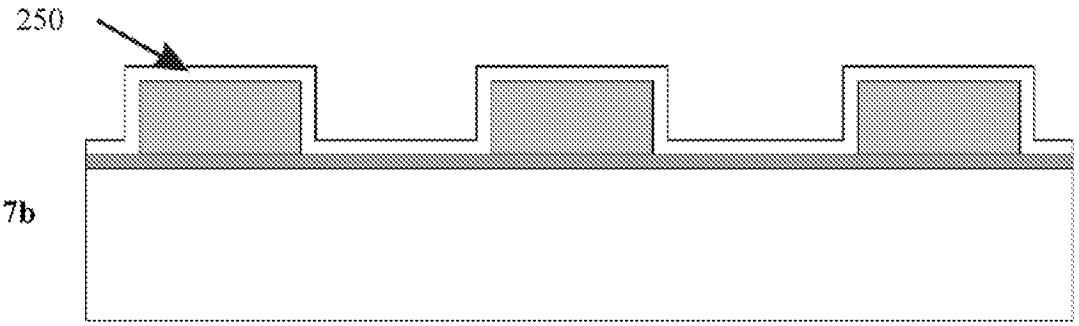

Fig. 7b

2) Conformal coating as described in disclosure

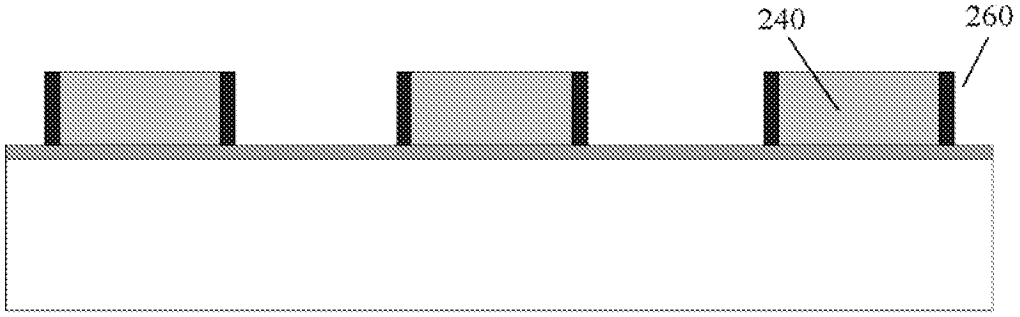

Fig. 7c

3) Thin wall formation

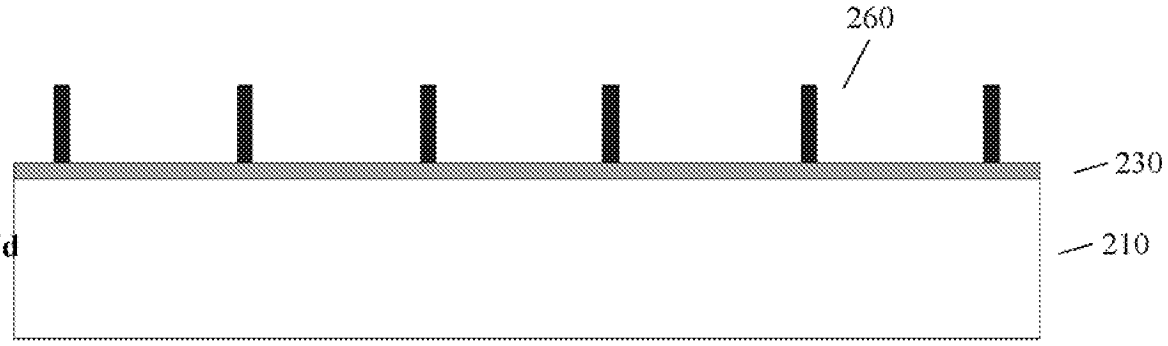

Fig. 7d

4) Thin wall formation (continued)

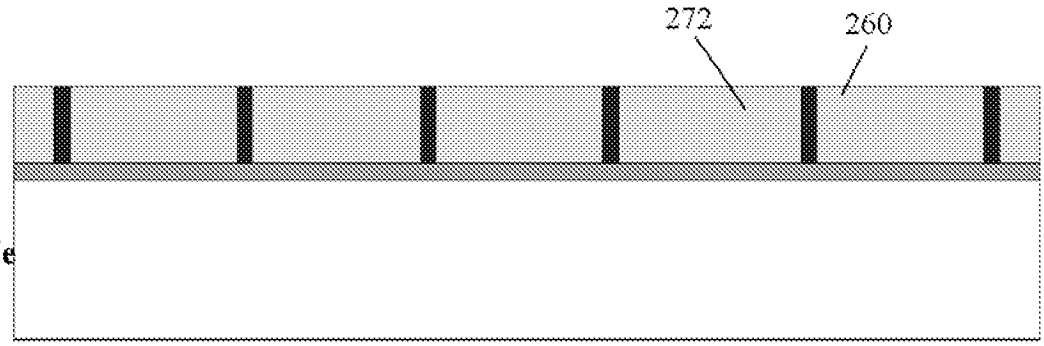

Fig. 7e

5) DBCP coating

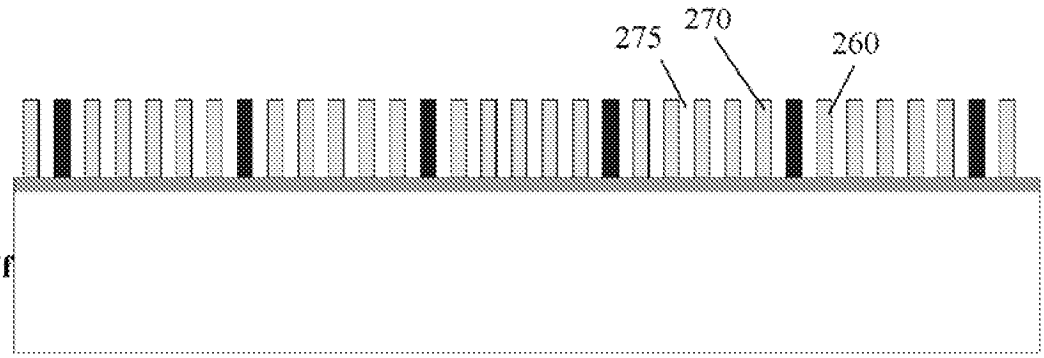

Fig. 7f

6) DBCP microphase separation to form cylindrical pillars

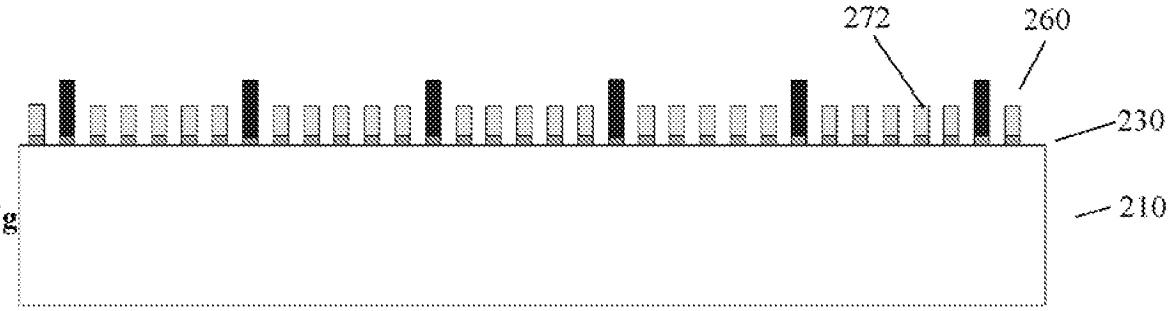

Fig. 7g

7) Transfer pattern into Cr layer by reactive-ion etching

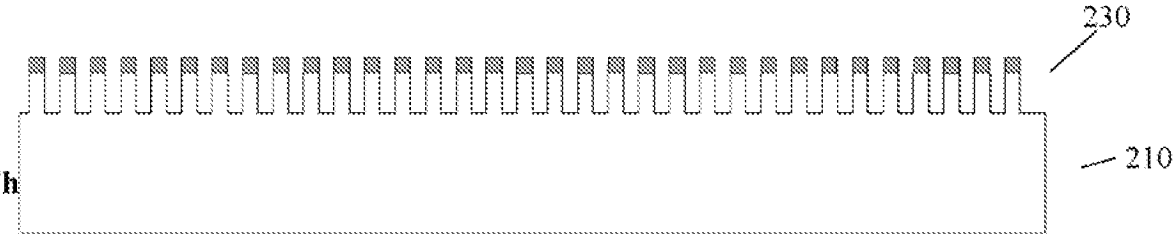

Fig. 7h

8) Transfer pattern into quartz by RIE (e.g. using CF4 plasma)

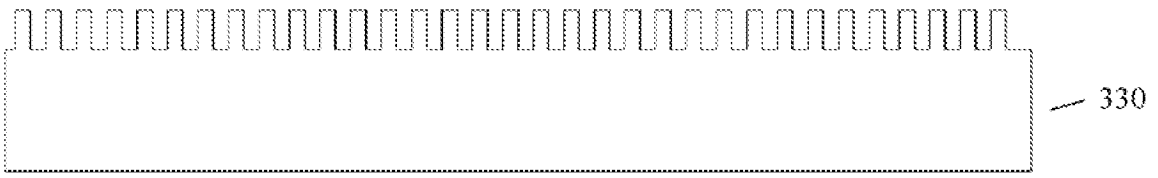

Fig. 7i

9) Remove Cr mask by wet etching