FIG.1

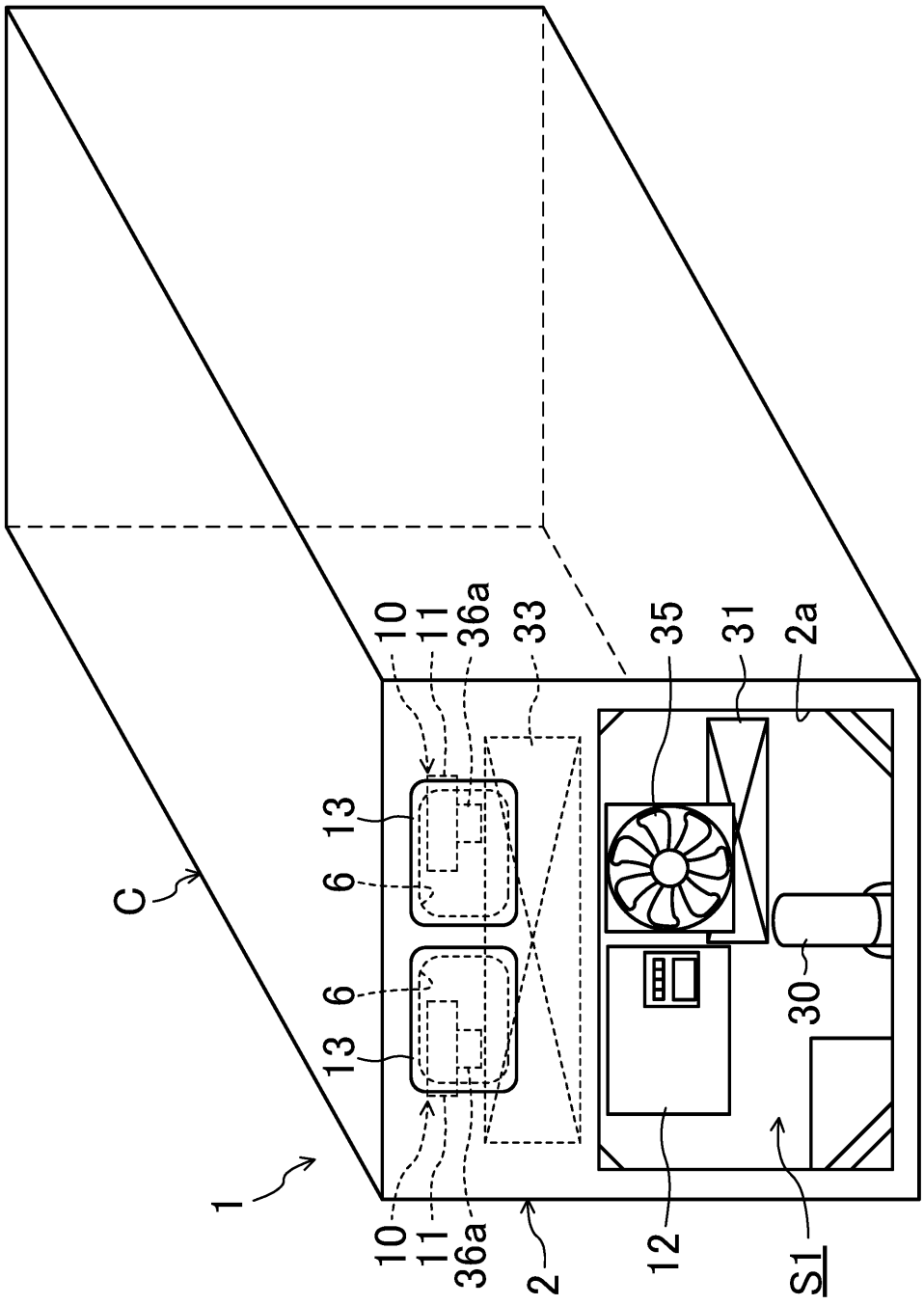

FIG.2

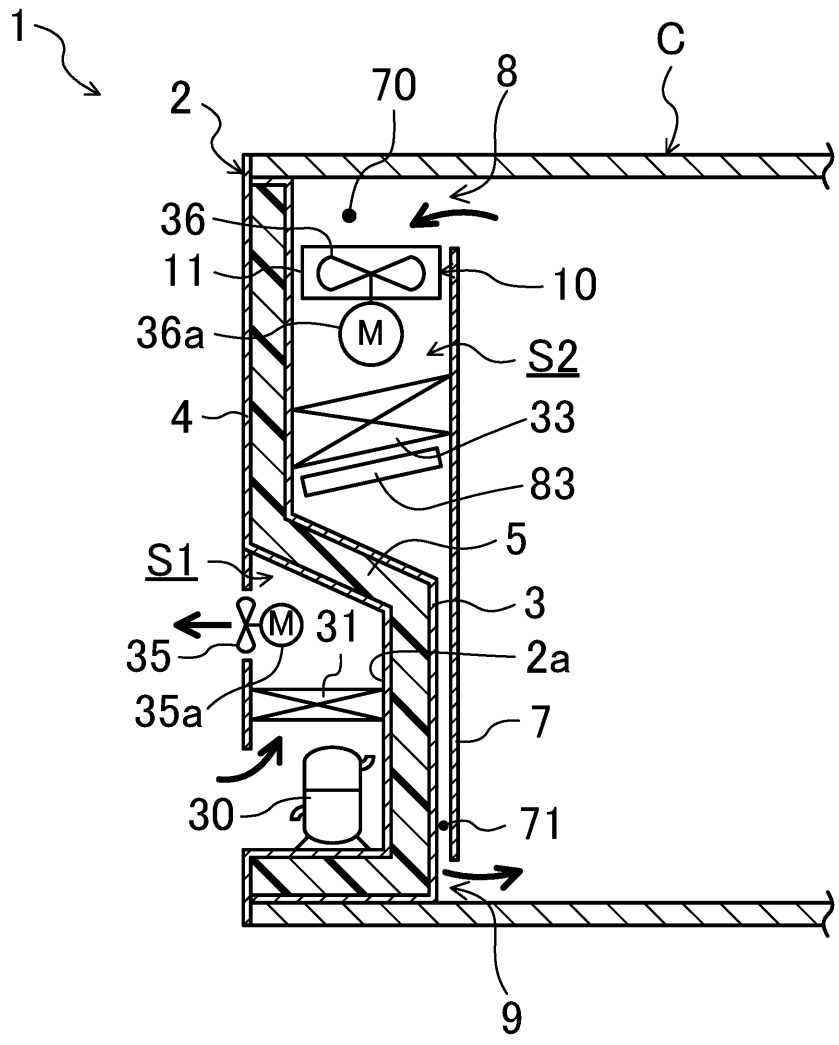

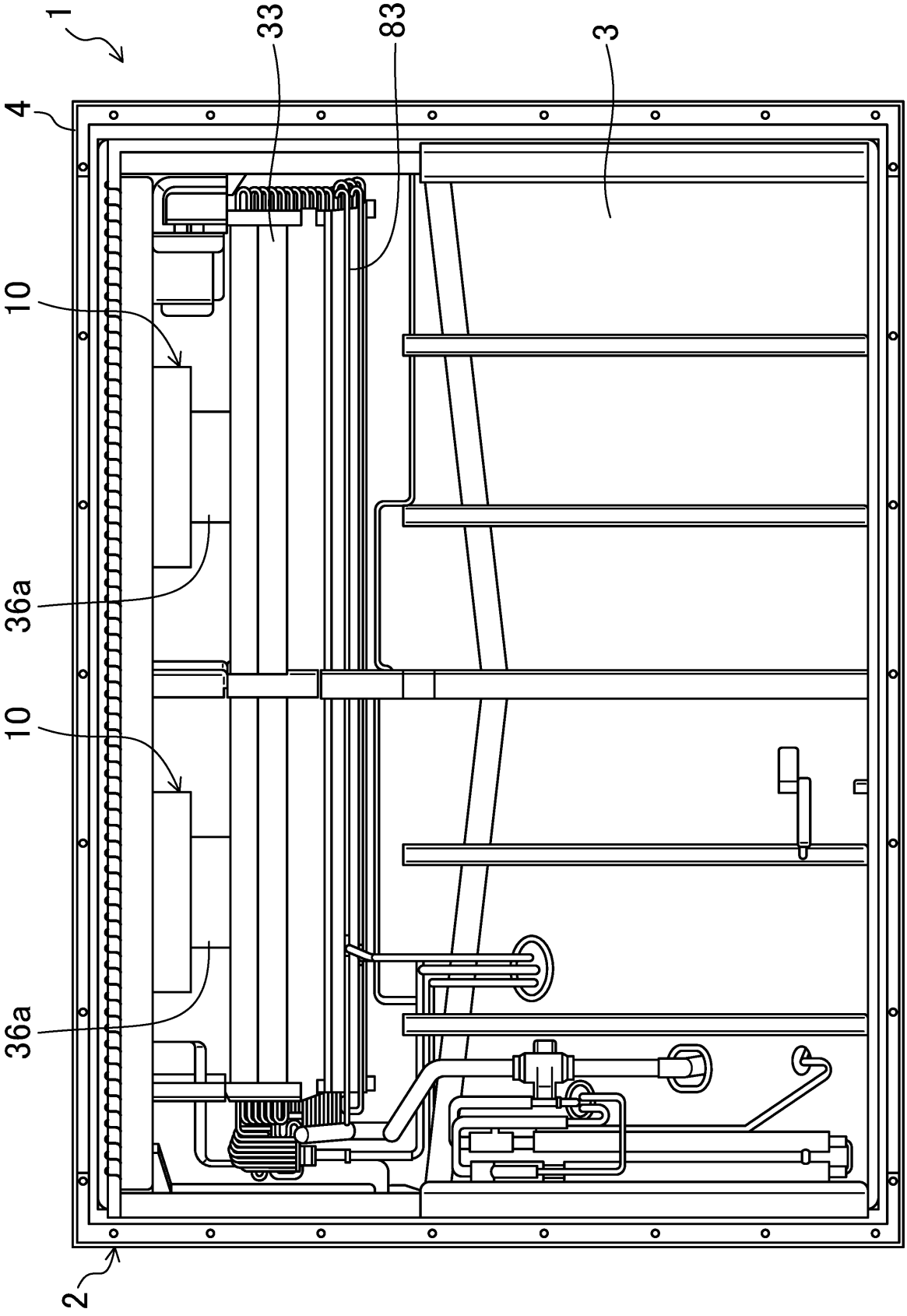

FIG.3

FIG.4

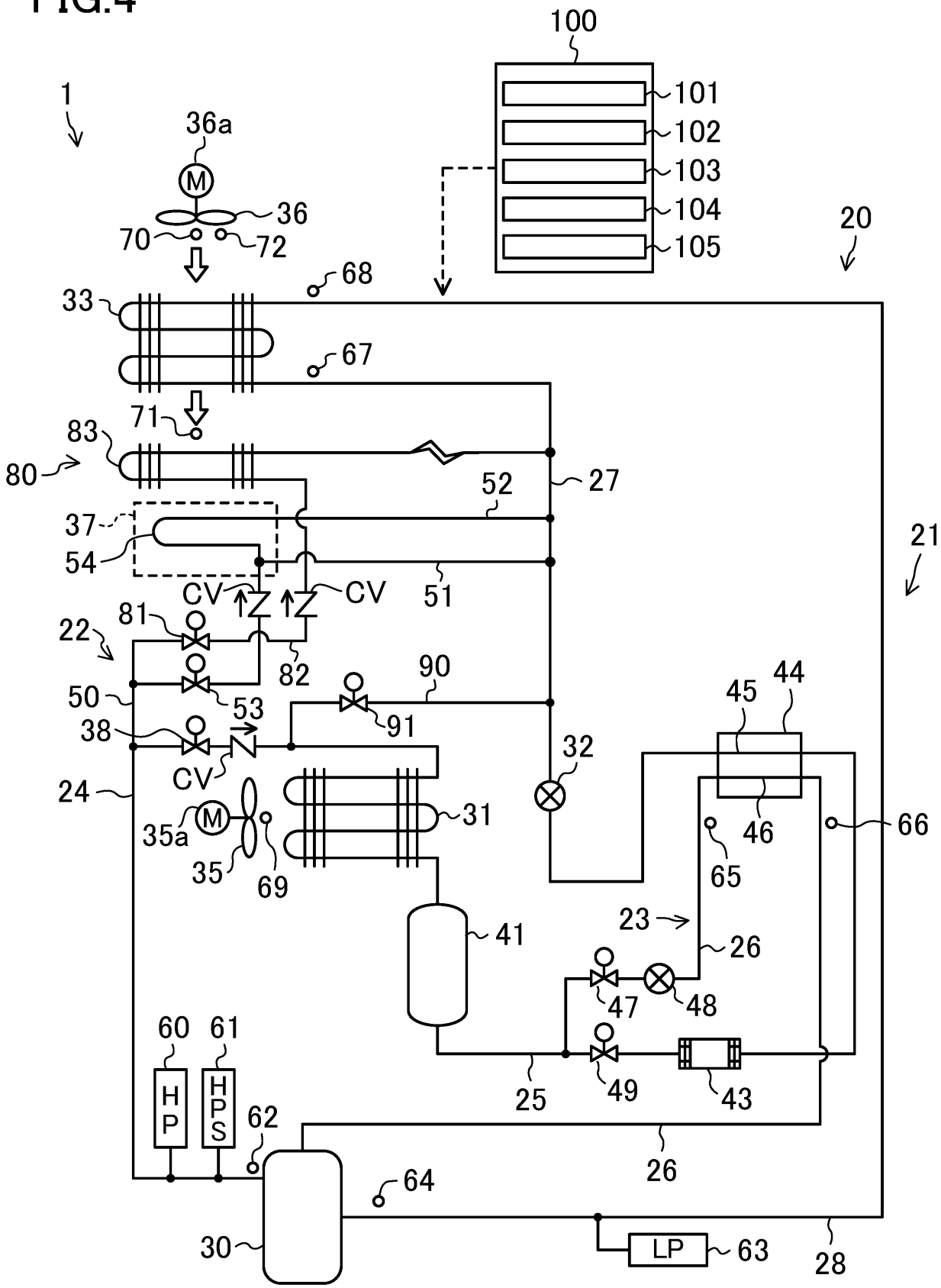
100
101
102
103
104
105
1
36a
M
36
70
72
20
68
33
67
71
83
80
27
52
37
54
21
CV
CV
51
81
22
82
90
50
53
91
45
44
38
32
CV
24
31
35a
M
46
66
35
69
65
23
41
26
47
48
60
61
HP
HPS
49
43
25
62
26
64
30
LP
63
28

FIG.5

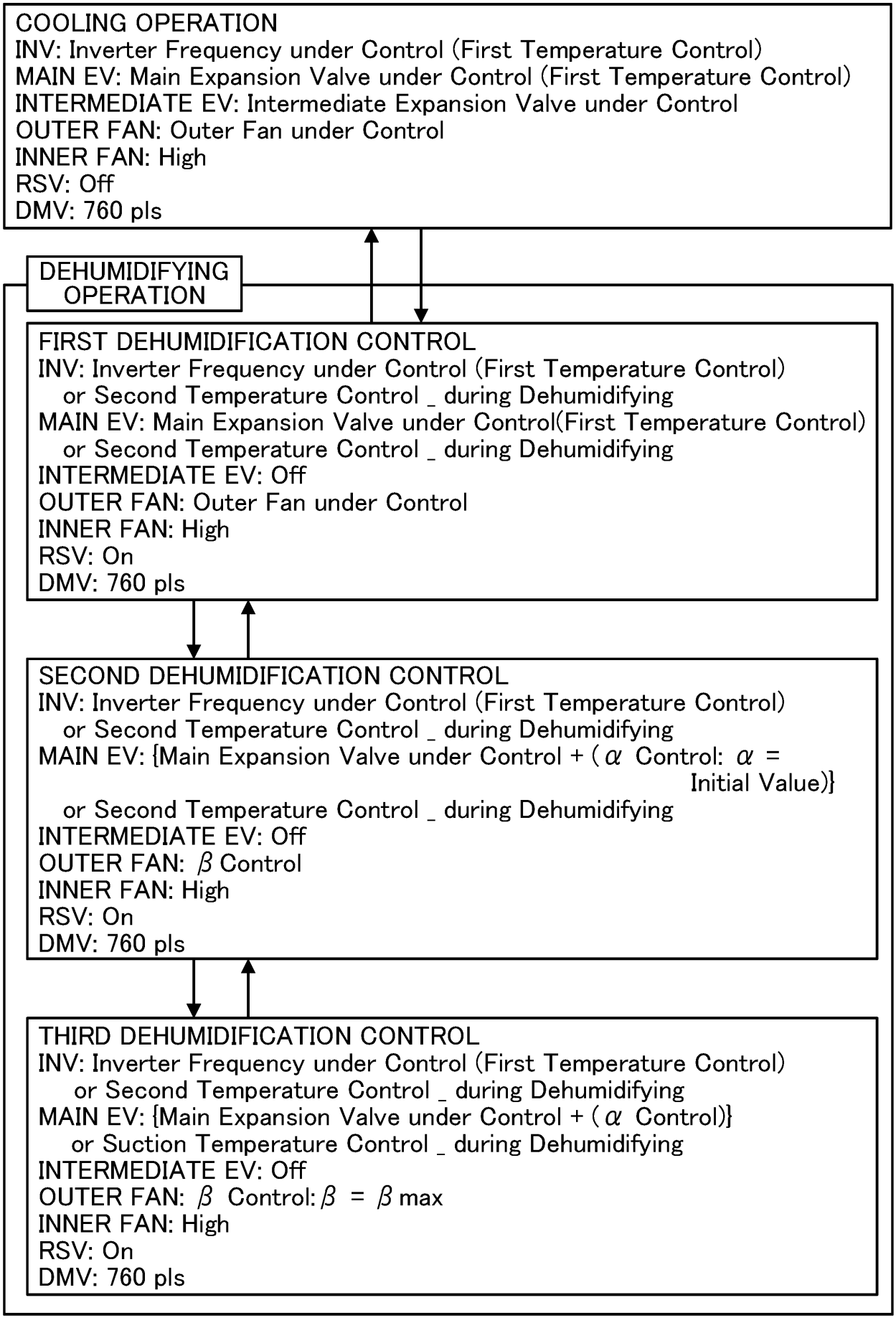
COOLING OPERATION
INV: Inverter Frequency under Control (First Temperature Control)
MAIN EV: Main Expansion Valve under Control (First Temperature Control)
INTERMEDIATE EV: Intermediate Expansion Valve under Control
OUTER FAN: Outer Fan under Control
INNER FAN: High
RSV: Off
DMV: 760 pls
DEHUMIDIFYING OPERATION
FIRST DEHUMIDIFICATION CONTROL
INV: Inverter Frequency under Control (First Temperature Control)
or Second Temperature Control _ during Dehumidifying
MAIN EV: Main Expansion Valve under Control(First Temperature Control)
or Second Temperature Control _ during Dehumidifying
INTERMEDIATE EV: Off
OUTER FAN: Outer Fan under Control
INNER FAN: High
RSV: On
DMV: 760 pls
SECOND DEHUMIDIFICATION CONTROL
INV: Inverter Frequency under Control (First Temperature Control)
or Second Temperature Control _ during Dehumidifying
MAIN EV: {Main Expansion Valve under Control + (α Control: α = Initial Value)}
or Second Temperature Control _ during Dehumidifying
INTERMEDIATE EV: Off
OUTER FAN: β Control
INNER FAN: High
RSV: On
DMV: 760 pls
THIRD DEHUMIDIFICATION CONTROL
INV: Inverter Frequency under Control (First Temperature Control)
or Second Temperature Control _ during Dehumidifying
MAIN EV: {Main Expansion Valve under Control + (α Control)}
or Suction Temperature Control _ during Dehumidifying
INTERMEDIATE EV: Off
OUTER FAN: β Control: β = β max
INNER FAN: High
RSV: On
DMV: 760 pls

FIG.6

	FIRST DEHUMIDIFICATION CONTROL	SECOND DEHUMIDIFICATION CONTROL	THIRD DEHUMIDIFICATION CONTROL
COMPRESSOR (INV)	Inverter Frequency under Control	Inverter Frequency under Control	PI Control
MAIN EV	Main Expansion Valve under Control (SH Control of Evaporator)	Main Expansion Valve under Control (SH Control of Evaporator)	Main Expansion Valve under Control Control of Superheat Degre α (α=1 to 12)
CF	Start/Stop High-pressure Control	Start/Stop β Control(β=1 to 9)	Start/Stop β Control(β=Max)
ESV	OFF	OFF	OFF
INTERMEDIATE EV	OFF	OFF	OFF
HSV	OFF	OFF	OFF
RSV	ON	ON	ON
DMV	760pls	760pls	760pls

FIG.7

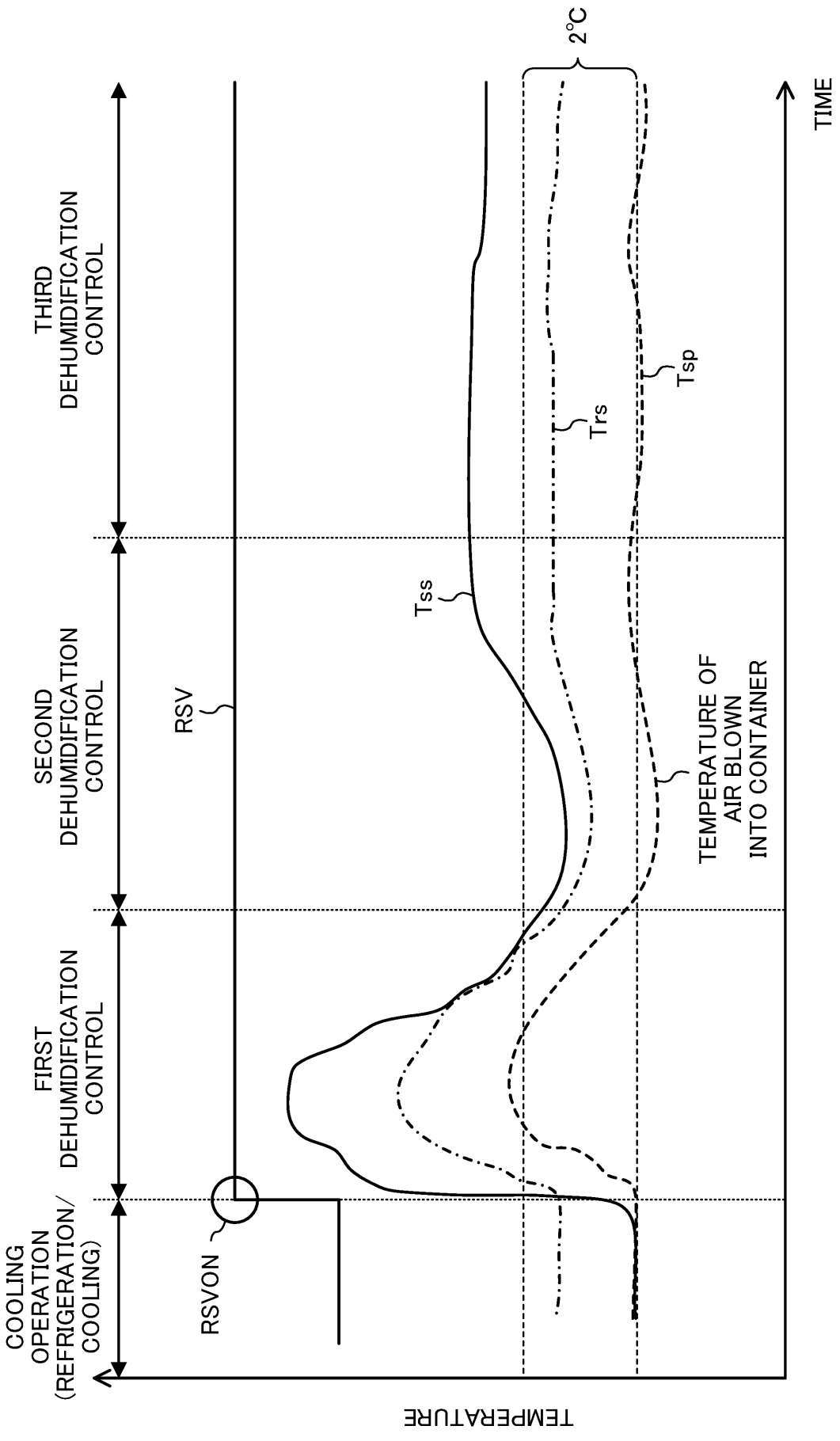
COOLING OPERATION (REFRIGERATION/ COOLING)
FIRST DEHUMIDIFICATION CONTROL
SECOND DEHUMIDIFICATION CONTROL
THIRD DEHUMIDIFICATION CONTROL
RSVON
RSV
Tss
Trs
Tsp
2°C
TEMPERATURE OF AIR BLOWN INTO CONTAINER
TEMPERATURE
TIME

FIG.8

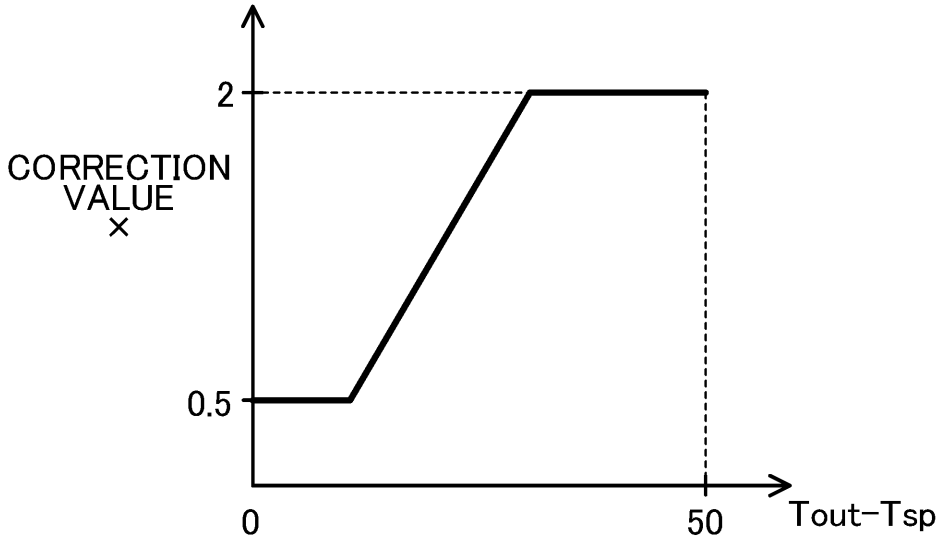

FIG.9

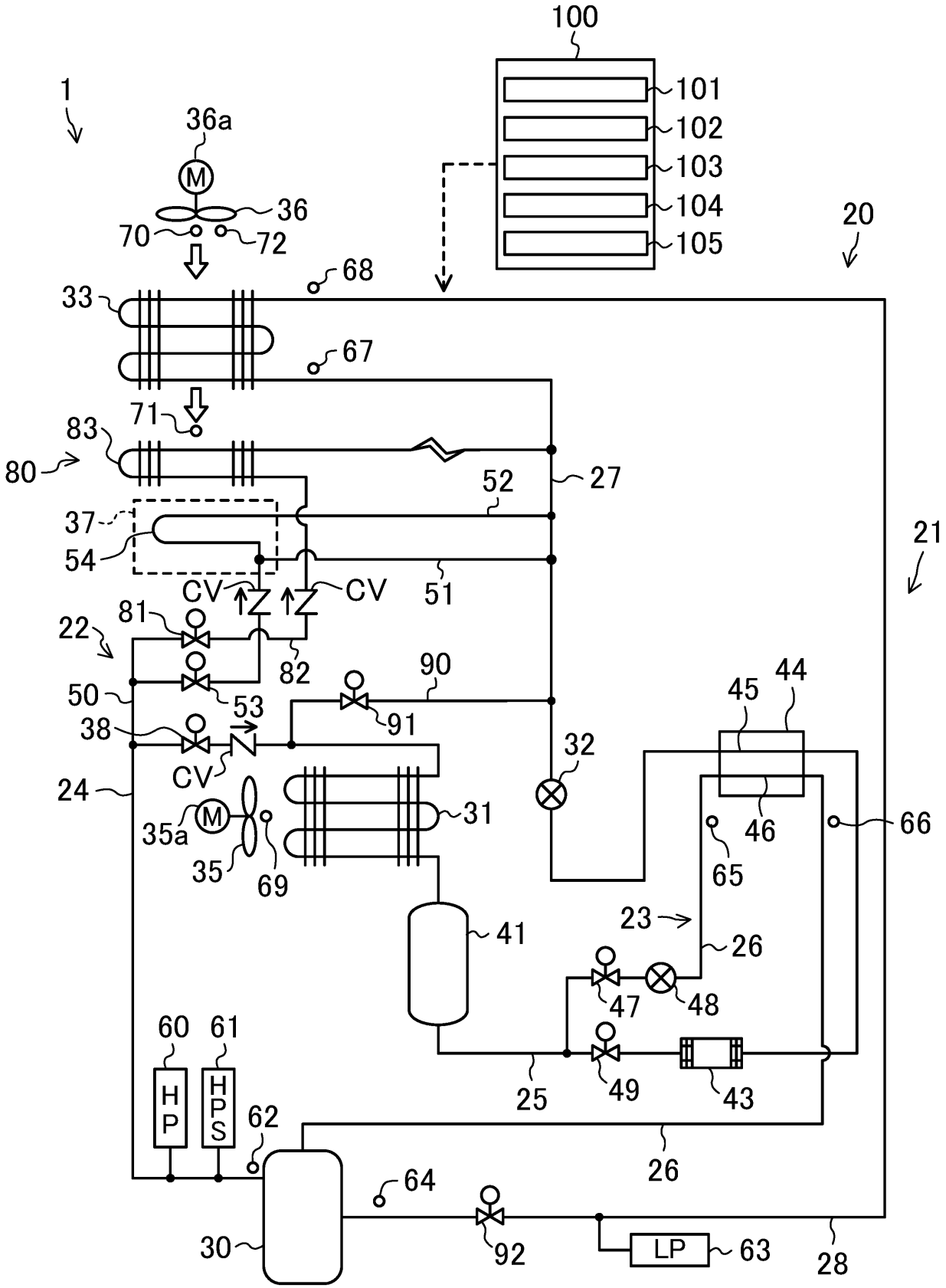
100
101
102
103
104
105
1
36a
M
36
70
72
20
68
33
67
71
83
80
27
52
37
54
21
CV
CV
51
81
22
82
90
50
53
91
45
44
38
32
CV
24
31
46
66
35a
M
35
69
65
23
41
26
47
48
60
61
HP
HPS
49
43
25
62
26
64
30
92
LP
63
28