(12) INTERNATIONAL APPLICATION PUBLISHED UNDER THE PATENT COOPERATION TREATY (PCT)

(19) World Intellectual Property Organization
International Bureau

(43) International Publication Date
12 December 2002 (12.12.2002)

PCT

(10) International Publication Number
WO 02/098250 A1

(51) International Patent Classification[7]: A41G 3/00

(21) International Application Number: PCT/EP02/01847

(22) International Filing Date: 21 February 2002 (21.02.2002)

(25) Filing Language: English

(26) Publication Language: English

(30) Priority Data:
RM2001A000317 7 June 2001 (07.06.2001) IT

(71) Applicant: INDORATA SERVICOS E GESTAO LDA [PT/PT]; Rua dos Murcas, n 68, P-Funchal (PT).

(72) Inventor: GOLD, David, Anthony; Via Guido Banti, 34, I-00191 Roma (IT).

(74) Agent: BABELUK, Michael; Mariahilfer Gürtel 39/17, A-1150 Wien (AT).

(81) Designated States *(national)*: AE, AG, AL, AM, AT, AU, AZ, BA, BB, BG, BR, BY, BZ, CH, CN, CO, CR, CU, CZ, DE, DK, DM, DZ, EC, EE, ES, FI, GB, GD, GE, GH, GM, HR, HU, ID, IL, IN, IS, JP, KE, KG, KP, KR, KZ, LC, LK, LR, LS, LT, LU, LV, MA, MD, MG, MK, MN, MW, MX, MZ, NO, NZ, OM, PH, PL, PT, RO, RU, SD, SE, SG, SI, SK, SL, TJ, TM, TN, TR, TT, TZ, UA, UG, UZ, VN, YU, ZA, ZM, ZW.

(84) Designated States *(regional)*: ARIPO patent (GH, GM, KE, LS, MW, MZ, SD, SL, SZ, TZ, UG, ZM, ZW), Eurasian patent (AM, AZ, BY, KG, KZ, MD, RU, TJ, TM), European patent (AT, BE, CH, CY, DE, DK, ES, FI, FR, GB, GR, IE, IT, LU, MC, NL, PT, SE, TR), OAPI patent (BF, BJ, CF, CG, CI, CM, GA, GN, GQ, GW, ML, MR, NE, SN, TD, TG).

Published:
— *with international search report*

For two-letter codes and other abbreviations, refer to the "Guidance Notes on Codes and Abbreviations" appearing at the beginning of each regular issue of the PCT Gazette.

(54) Title: METHOD AND ASSEMBLY FOR INCREASING HAIR VOLUME

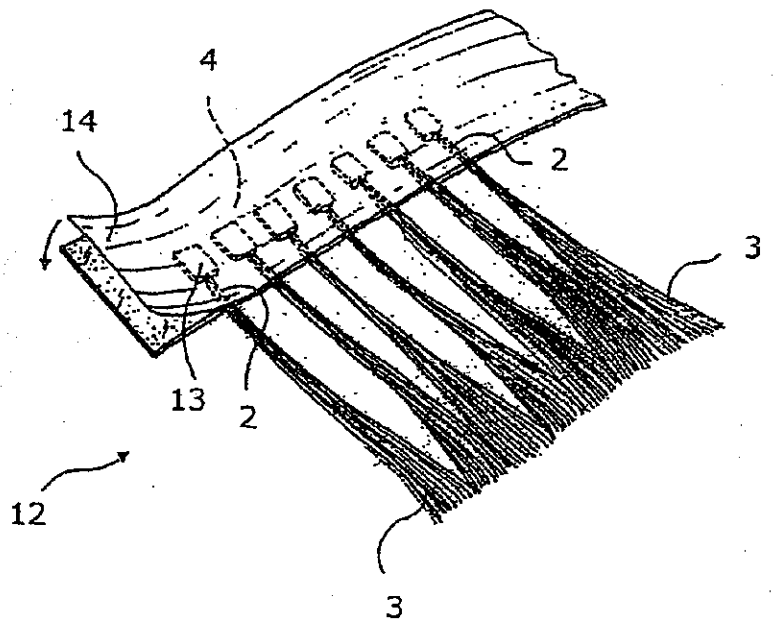

(57) Abstract: The invention relates to a method for increasing hair volume or length, comprising the following steps: - providing a plurality of extensions (C) comprising several hairs (3), which are connected by a fixing element (13), said extensions (C) being aligned and basically in parallel with their fixing elements (13) located on a support tape (11) having an adhesive face (11a); - adhering the adhesive face (11a) of the support tape (11) to head hair (T) and positioning the extensions (C); - connecting the extensions (C) with the head hair by attaching the fixing elements (13) to it. Further the invention relates to an assembly (12) for use in such method.

WO 02/098250 A1

Method and assembly for increasing hair volume

The current invention refers to a method for increasing hair volume and to an assembly of hair extensions designed for use in this method and to the procedure for producing these assemblies.

Various systems are already known for increasing hair volume and also for lengthening hair. These systems in general use hair extensions, natural or artificial in nature, which are then fixed to the head hair using methods that, based on the proposed application methods, determine the acceptance and satisfaction on the part of the user who has requested such treatment.

Another aspect that helps to increase the satisfaction with such treatment is the speed of implementation.

The known systems include a phase in which the extensions are connected to the hair of the user. During this phase, the extensions can basically be sewn, bonded or knotted to the user's hair. However, these methods of extension require a period of time that is very long, considering that each single extension requires manual implementation and precision.

Other methods are known for creating a connection between the extensions and the hair, requiring the use of external elements such as clasps, combs, grips, etc. These elements can be used to attach extensions of larger dimensions to the user's hair, but have the great inconvenience that the connection is clearly visible and can be felt by the user who can feel uncomfortable with them.

Amongst other known methods, there are those that permit smaller dimensioned extensions to be connected to the hair. These methods, that require the use of adhesive, small clasping elements, etc. give fairly good results, but in all cases require long application sessions because the operator must connect each individual extension, none of which can be of larger dimensions as otherwise the connections would be visible to the user and the observer.

An example of this method is described in JP 03152205 (Aderans Co. Ltd.) and in other successive patents based on perfecting this technique. The inventor of the present invention has developed such methods and bondings for lengthening and thickening hair described in ZA 93/5214 A or in DE 196 26 107 C.

These documents describe extension elements and the relevant method of application where an extension is fixed to the head hair with the application of a thermoplastic adhesive. In this context, it is clear that application is manual and that it may not be uniform from extension to extension.

CONFIRMATION COPY

The forced manual implementation of these known methods therefore implies a series of problems. In the first case, the operator must have great experience and practice in this technique to be able to implement regular connections, a condition that is not always possible. In addition, apart from experience, it will be extremely difficult to produce uniform connections: they will vary greatly as they will not be positioned exactly along the lines proposed for the hair extension and will vary in quality and size.

All this means that the quality of the finished work will not be optimal, will be more exposed to wear, with imperfections that cannot be rectified, increased costs due to very long application times and the difficulty in locating experienced operators.

Similar difficulties are present with those methods using an adhesive applied to the connection being created, for example, in the method described in US 4,934,387 (Megna).

Embodiments ettempt to provide a method of increasing hair volume and to provide an assembly of extensions designed to be used in this method which resolve the inconveniences mentioned with reference to the techniques noted.

includes the steps of claim

In accordance with a first aspect of the invention, there is provided a method for increasing hair volume or length, comprising the following steps:

- providing a plurality of extensions comprising several hairs which are connected by a fixing element, said extensions being aligned and basically in parallel with their fixing elements located on a support tape having an adhesive face

- adhering the adhesive face of the support tape to head hair and positioning the extensions

- connecting the extensions with the head hair by attaching the fixing elements to it.

In accordance with a second aspect of the invention, there is provided an assembly for increasing hair volume or length comprising:

- support tape having an adhesive face

- a plurality of extensions comprising several hairs, which are connected by a fixing element said extensions being aligned and basically in parallel with their fixing elements located in the support tape
- connecting means which are provided on the fixing elements to connect the extensions to head hair

In accordance with a third aspect of the invention, there is provided an assembly for increasing hair volume or length comprising:

- a support tape having an adhesive face
- several extensions comprising several hairs, which are connected by a fixing element said extensions being aligned and basically in parallel with their fixing elements located on the support tape said fixing elements being connected means to connect the extensions to head hair.

The solution idea consists of providing a method and an assembly for increasing hair volume with no manual intervention required and which allows the application of extensions in batches by applying several extensions in one step. The fixing elements connecting the hairs of each extension is usually called bonding

The advantages of the method of the invention are:

Since several extensions are fixed to the head hair in only one step the application of the extensions is much faster than with the known method. A hair extension procedure in which about 200 extensions are applied takes at least two hours when done in the conventional way. With the method of the invention the same amount of extensions may be applied in fifteen minutes or less. Therefore not only costs are reduced but also the comfort for the customers is enhanced.

The procedure is much easier to perform since it is no longer necessary to roll bondings with the fingers so that the method of the invention may be performed not only by specialized and trained staff but also by hair dressers after short introduction. The likelihood of mistakes is minimized and the appearance of the result is much better. This is due to the fact that the bondings are applied regularly with equal distances. Further the bondings are completely flat and less

visible. The head hair is not pulled in from the sides to fix a bonding as it is the case with known methods in which the hair is pulled out of the natural falling so that the head hair forms a small triangle with the apex in the bonding. With the method of the invention the head hair remains essentially parallel so that so that the hair is not disturbed by the bondings and the natural appearance is maintained.

A further advantage of the invention is that it is possible to use smaller extensions, i.e. each extension contains a smaller number of hairs compared to the conventional method. Since it is possible to apply a bigger number of extensions in a reasonable time a finer distribution of the hair can be accomplished. The use of very small bondings is not possible with the conventional method since the thermal capacity would be to small, so that the bonding would cool down in a short time after removing a heating device so that the time for which the bonding is soft and tacky is too short for establishing a proper connection to the head hair, by rolling it with the fingers, for example.

The method of the invention is very safe since even a hot instrument is used for melting the thermoplastic material of the bonding or on the bonding it is possible to prevent the hot instrument from coming into contact with the hair or the head hair. Furthermore, no protection shield is needed any more for protecting the customer when applying the extension.

There are two main embodiments of the method of the invention. In a first embodiment on the bondings or fixing elements connection means are located which are used to secure the extension on the head hair. Such connection means may consist of a drop of glue or hot melt adhesive, for example. Applying the extensions is especially easy if a glue is used which is activated by ambient air. In a second embodiment the fixing element itself is used as connection means. In that case the fixing element itself is softened by application of heat or ultrasonic energy to establish connection to head hair, for example.

When the extensions are applied by means of heat the connection means preferably consists of a thermoplastic material which softens when the heat is applied. After cooling down the connection means the thermoplastic material is solidified and secure connection is established.

Instead of applying heat directly it can be applied ultrasonic energy to the connection means. In this case a thermoplastic material softens due to heat and vibration produced by ultrasonic waves. The advantage of this procedure is that the head hair is less exposed to heat and that the method is fail safe.

Further the invention relates to an assembly according to claims 10 and 11 relating to a first and a second embodiment of the invention.

The principal advantage of this method and the assembly of extensions resides, according to the present invention, in allowing the rapid application of a high number of extensions in a single step, implementing contemporaneously a corresponding number of connections with very small dimensions and therefore almost invisible and not detectable by the user.

In a further variant of the invention the extension comprises hair of a color different to that of the head hair. In that way highlights or lowlights can be realized much easier than by conventional methods in which single strains of head hair are colored.

In a preferred embodiment of the invention the fixing elements consist of plates having at least layers of plastic with different melting points. So it is possible to be sure that only a part of the fixing elements will be softened when treated with heat or ultrasonic energy.

The current invention will now be described according to the various forms of preferred implementation provided as examples but not limited by reference to the appended drawings, in which:

Fig. 1 represents a perspective view of an assembly of strands according to the invention;

Fig. 2 to 6 schematically illustrate, using perspective views, various phases of a method for increasing hair volume according to the current invention, implemented with an assembly of extensions according to the invention;

Fig. 7 to 12 illustrate six additional examples of creating the assemblies of the preceding figures;

Fig. 13 a detail of another embodiment of the invention in a sectional view in enlarged scale;

Fig. 14 a gripper device used for the method of the invention in a perspective view; and

Fig. 15 the gripper device of Fig. 14 with some parts broken away for better understanding the function.

With reference to Figure 1, an assembly 12 of extensions C, according to an initial example for implementing the invention, consists of a number of extensions C, aligned and basically in parallel, consisting of a quantity of substantially predefined hairs 3 which can be natural or artificial, with appropriately selected colors, uniform or streaked.

The extensions C are arranged substantially equidistant. They extend from their respective proximal extremities 2, designed to be connected to the head hair, to the free distal extremities. The extensions C and the respective hairs 3 have a length that is preferably uniform.

Together with the aforesaid proximal extremities 2, the assembly 12 includes, on each extension C, a fixing element 13 produced from a thermoplastic material such as polyamide, polyester or even a polyurethane, for example, nylon.

To connect the fixing element 13 to the respective extremities 3, various systems can be used, including hot gluing, injection, etc, which are well known in the art.

The fixing element 13 has the form of a small rectangle or disk with a width (exaggerated in the drawings) substantially equal to or only slightly larger than that of the respective extension C. The same applies to the thickness, to limit to a minimum the quantity of thermoplastic material that, as described below, acts as the adhesive.

The assembly 12 also includes a support tape 11, made of a transparent material with an adhesive face 4 on which the fixing elements 13 are positioned.

The material forming the support tape 11 is preferably, but not exclusively, made of a material resistant to heat. The adhesive used is a non-permanent and reversible type, operated by pressure. Its adhesive force on the tape 11 is greater than that produced on the thermoplastic material that forms the fixing elements 13 so that a subsequent separation of the tape 11 from this material does not leave any adhesive residues.

The aforesaid adhesive face 4 can be covered with a protective tape 14 (Fig. 1) to facilitate production and storage of the assembly 12.

In this production example, the assembly 12 consists of means for connecting extensions C to head hair T that consist of the fixing elements 13 themselves as shown in the description of the hair extension method that follows.

The support tape 11 can have a defined length and hold a predetermined number of extensions C or it can have an undefined length so that the operator can cut sections to select the desired number of extensions C.

In all cases, the operator can eliminate one or more extensions that are not compatible with the application being carried out by simply cutting away a section of tape 11.

On each assembly 12, the extensions C can be of the same length, size and color, but it is also possible to have variations in length to produce scaled increases, variations in color to produce complex streaks and variations in size.

The covering and protective tape 14 can also be adhesive and/or transparent and can also be made of normal silicone-coated paper.

Still based on the current example, the thermoplastic material can be a substance suitable for being fused at a temperature above ambient, assuming the properties of a plastic fluid, and then cooling and solidifying at ambient temperature.

Substances with analogous properties can be fused using the direct application of mechanical energy, in the form of high frequency vibrations, in particular, ultrasonic vibrations. In this case, the intermolecular vibrations and the resulting friction generate the quantity of heat necessary to plastically move the molecules with respect to each other. The generation of heat stops when the vibrations cease, resulting in almost immediate solidification.

Examples of substances that can be used as a thermoplastic material are polyesters, polyamides, polyurethanes, etc.

The function of the fixing element 13 according to the current invention is that of holding together the hairs in each extension C and that of providing the attachment point of the extension C to the hair of the head hair T being extended.

Other examples of fixing elements 13 include plastic elements, in the form of disks or balls to which the hair of the extension is fixed. These fixing elements 13 are associated with means of connections, for example, consisting of portions of a thermoplastic material as already described or glues and/or adhesives of another nature: pressure hardening, thermosetting, thermo-shrinking, etc. Such examples will be described below.

The fixing element 13, which can have a color compatible with the hair of the extension C, can also be embellished with additional decorative elements such as strass, etc.

All the fixing elements and their variations described above are suitable for the hair extension method described below.

With reference to Figures 2 to 6, the extension method using the assembly described above proceeds with the following steps.

The extension assembly is prepared, the protective tape 14 is removed if present. In this configuration, the extensions C are positioned in an ordered alignment; the support tape 11 can be stuck to the hair T being extended. The operator can utilize the adhesive face of tape 11 and its transparency to check the effect produced on the hair being extended before fixing it in place. The user can also check the effect by means of a mirror.

Subsequently, once the position of the tape 11 and the extension C has been decided on, the next phase occurs in which the fixing element 13 is connected to the hair of the user. In this phase, the operator activates the means of connection described above.

In the current implementation example, the fusing property of thermoplastic material is used. In fact, it is proposed that energy be applied to the fixing elements via the support tape 11. With reference to Fig. 3, a gripper device 15 with two pressure elements 16 is used, elongated sufficiently to apply a uniform pressure along the entire length of the tape 11, compressing the fixing elements 13.

In this context, at least two systems for transmitting energy to the fixing elements 13 can be used. The first proposes the application of heat. For this proposal, the pressure elements 16 are heated in a convenient manner using one or more electrical resistors.

In this case, the heat is transmitted from one side through the tape 11 and from the other directly onto the fixing elements 13. The tape 11, as previously described, is resistant to heat and will not deform nor degrade when in contact with the hot pressure elements 16.

The second system proposes the use of mechanical energy in the form of ultrasonic frequency vibrations, for example in the range between 20 and 60 kHz. In this case, one or both of the pressure elements are connected to a vibrating body, for example, a piezo-electric element subjected to alternating current at the desired frequency and they will transmit these vibrations to the fixing elements 13 both directly and through the tape 11.

In this case, note that the application of vibrations allows the molecules of the fixing element 13 thermoplastic material to flow easily between the individual hairs of the extension C and the head hair T, penetrating and joining them together.

Note also that, thanks to the efficiency with which the molecules distribute themselves around the hairs in subtle layers, only a minimum quantity of thermoplastic material is necessary to implement the fixing.

In addition, without any source of heat, the immediate solidification when vibrations cease and the impossibility of molten thermoplastic material falling between the hairs or on the head of the user are all important added advantages.

In all cases, the presence of tape 11 and the fact that it is compressed against the hairs together with the fixing elements 13 means that the thermoplastic material remains in position and forms connections with very small dimensions.

In addition, the presence of tape 11 means that additional covers for protecting the user are not required. Once this connection phase is complete, tape 11 can be removed without leaving any glue on the hairs (Fig. 5), to complete the operation.

In the case where the fixing elements are not made of thermoplastic material, the means of connection are activated using the systems described above.

Where the means of connections consist of portions of thermoplastic material positioned in order on a suitable tape and destined to be joined with their respective fixing elements 13 of the extensions C, the aforesaid tape can be applied after the support tape 11 with the extensions C has been positioned on the hair of the user.

The operator can easily superimpose the fixing elements 13 on the portions of thermoplastic material, conveniently positioning the tapes that can be removed and attached as necessary.

Once in position, the tapes can be compressed together by means of a gripper unit 15, placing the tapes between the heated or vibrating pressure elements 16.

In all cases, the two tapes contain the thermoplastic material, which adheres to the fixing elements and mixes with the hair of the user, connecting the respective extensions C to the head hair T.

It is proposed that the dimensions of the fixing element and the portion of thermoplastic material can be reduced as required, without substantially influencing the capacity of the extensions of the assembly 12 of being connected to the respective head hairs.

The considerations and variants of the application methods given above can be applied to the examples of assemblies produced as shown in Fig. 7 to 12, which represent a single portion of the assembly 12, which is repeated.

With reference to Fig. 7, an assembly 12 is described where the fixing element 13 consists of a rigid or semi-rigid disk, in a non-adhesive and non-thermoplastic material, but resistant to heat and vibration, like a normal plastic. It is intended that the form of a disk is simply an example; a plaque of any suitable form can be a fixing element. Various systems can be used for unifying the fixing element 13 and the respective proximal extremities 2, such as adhesion (gluing or fusion) of a pair of semi elements that hold the hair or by an injection procedure that incorporates the extremities 2.

In this second method of implementation, the element 13 is adhered to the adhesive face 4 of the support tape and the means of connection are represented by a quantity 20 of glue or thermoplastic substances applied directly to the exposed surface 21 of the element 13.

With reference to Fig. 8, a third example of an assembly 12 proposes a fixing element analogous to the preceding example, which is repeated in the fourth and fifth example. The second and third example for producing the assembly 12 are adapted by the method described above where the thermoplastic substance of the respective quantities 20, 22 are melted using heat or vibration. It is also proposed that a thermosetting material, semi-fluid and/or plastic at ambient temperature and solid after the application of heat can basically substitute this substance.

The fourth production example (Fig. 9) has a quantity of glue 23 located on the disk-shaped fixing element 13, for example pressure activated, thermally activated or a type that hardens on exposure to air, such as a two-component resin. In the last case, a protective layer 24 that prevents the glue from coming into contact with atmospheric oxygen protects the fixing element 13. The use of the glue means that the use of heat or vibrations is no longer required, as will be indicated, and the application equipment and the respective pressure devices serve to position the support tape 11 and the extensions C.

With reference to Fig.10, a fifth example proposes the use of a fixing element as described in the previous examples and a means of connection consisting of an adhesive element 25, glue, thermoplastic or similar substance, arranged in order on the protective tape 14. In this case, the protective tape 14 helps in the application of the extensions C and is applied to the head hair T before the hair-extension connection. In the case where the glue is activated by air, an additional layer of protection is proposed.

In the sixth and seventh examples of Fig. 11 and Fig. 12, the fixing element 13 consists of a pair of semi elements 13a and 13b, suitable for being attached and trapping the hair of the head T. Finally, the semi elements will include a cavity 26 for holding this hair. A semi element 13a is fixed to the proximal extremity 2 of the extension C while the other 13b is positioned in order on the protective tape 14 and is applied according to the method in the preceding example.

The means of connection consists of a thermoplastic substance or glue 28, in particular two-component glue or similar, protected by a suitable protective layer 29.

In the embodiment of Fig. 13 the fixing elements 13 consist of to layers 30 and 31. The first layer 30 is fixed to the adhesive face 4 of the support tape 11. The hairs 3 are sandwiched mainly between the first layer 30 and the second layer

31. The second layer 31 has a lower melting point than the first layer 30 so that upon application of heat or ultrasonic energy only the second layer 31 will get soft to establish the connection with head hair. The distance d between the fixing elements 13 may be chosen appropriately as 1 mm to 3 mm. In the same order of magnitude is the width b of the fixing elements 13.

The assemblies may be produced by hand by fixing the extensions on the support tape, but it is preferred to use machines for production.

Figs. 14 and 15 show a preferred embodiment of a gripper device 15 for use in the method of the invention. The gripper device 15 comprises a handle 50 from which two jaws 46, 47 protrude. The first jaw 46 has a recess 48 in which a pressure element 49 is held. The fixed jaw 47 has a contact surface 40 made of resilient material to obtain uniform pressure for all extensions.

The pressure element 49 can be heated by serpentine thermistors 41 to activate the connection means. The pressure element 49 is driven by a rod 43 which is engaged to a pinion 42 driven by an electric motor 44. The pressure element 49 is pivotable with respect to the rod 43 to be able to adapt to extensions having different thickness. Alternatively the pressure element may be driven by hydraulic or pneumatic cylinders.

The movement of the pressure element 49 can be controlled by an actuating button 45. The temperature of the thermistors 41, the pressure applied by the pressure element 49 and other parameters are controlled by a programmable control unit connected with the gripper device 15.

From the description, it is proposed that this method of hair extension does not require any manipulation on the part of the operator and enables the formation of extension-hair connections with very small dimensions, considering that the pressure elements, with the presence of at least one tape, contain the material that enables the connection to occur. The resulting connections are very subtle, with finished edges, almost imperceptible. The only manual intervention is based on manipulating the device that is used to activate the connection.

The dimensions of the connection are not subordinate to the fact that the thermoplastic material and the hair of the extension must forcibly surround the hair of the head hair, creating a connection point whose volume cannot be reduced below a certain limit. For example, in the above-cited Japanese patent, the simple fact that the hair of the extension must be wound around the hair of the head creates in itself a voluminous connection.

According to the current invention, the dimensions of the connection point depend exclusively on the quantity of hair compressed within the extension – the more subtle the extension, the more subtle the connection.

The lack of manipulation therefore leads to the formation of uniform connections. Their optimal quality prevents disconnection due to, for example, penetration of water or similar.

With this system, it is also possible to hide the extensions within the hair. Then, because it is possible to apply extensions equidistant to each other, additional extensions can be applied between them, with the possibility of obtaining consistent extensions within brief periods and to create complex streaks (highlights) by mixing in extensions with colors different to the hair of the user.

This method reduces the quantity of thermoplastic material used, energy used for activation, no loss of heat and no contamination of the equipment or the connection device.

In addition, as can be appreciated, the extension method described above and the related assembly of an extension, due to the possibility of using numerous application variations, allows the professional operator to make maximum use of their fantasy.

In addition to the above described methods of adding extensions to hair, assemblies of extensions suitable for being used in the aforesaid method and the procedures for producing those assemblies, a technician in this field can implement numerous additional modifications and variations for the purpose of satisfying additional and complementary requirements, all of which are included within the protected field of the current inventions, as defined in the attached claims.

Especially one skilled in the art will be aware that the shape of the fixing elements 13 may differ from that of the drawings and that the width of these elements may be the same as that of the extensions C or slightly bigger. Further the distance between the extensions C on the tape 11 may be chosen as appropriate.

Claims

1. A method for increasing hair volume or length, comprising the following steps: -

   - providing a plurality of extensions comprising several hairs which are connected by a fixing element, said extensions being aligned and basically in parallel with their fixing elements located on a support tape having an adhesive face

   - adhering the adhesive face of the support tape to head hair and positioning the extensions

   - connecting the extensions with the head hair by attaching the fixing elements to it.

2. A method according to claim 1, wherein the extensions of one support tape are connected with the head hair simultaneously.

3. A method according to one of the claims 1 or 2, wherein the extensions are attached by activating connection means which are provided on the fixing elements.

4. A method according to one of the claims 1 or 2, wherein the extensions are attached by activating the fixing elements which are connection means for connecting the extensions with the head hair.

5. A method according to one of the claims 3 or 4, wherein said connection means is activated by means of application of heat or ultrasonic energy.

6. A method according to one of the claims 3 or 4, wherein mechanical energy, heat or ultrasonic energy is applied by means of a gripper device with two pressure elements which are elongated to apply a uniform pressure along the entire length of the tape.

7. A method according to claim 6, wherein a gripper device is used which has a fixed jaw and a pressure element which is moved by an actuation means against said fixed jaw.

8. A method according to claim 7, wherein the pressure element of the gripper device is pivotable to compensate for eventual differences in the thickness of the hair.

9. A method according to one of the claims 7 or 8, wherein the pressure element of the gripper device is driven by an electric motor.

10. A method according to claim 3, wherein the said connection means consists of glue.

11. A method according to claim 11, wherein the glue is activated by exposing to ambient air.

12. A method according to one of the claims 1 to 11 wherein a protective tape which is provided on said support tape is removed before adhering the support tape to the head hair.

13. An assembly for increasing hair volume or length comprising:

- a support tape having an adhesive face;
- a plurality of extensions comprising several hairs, which are connected by a fixing element said extensions being aligned and basically in parallel With their fixing elements located on the support tape
- connecting means which are provided on the fixing elements to connect the extensions to head hair.

14. An assembly for increasing hair volume or length comprising:

- a support tape having an adhesive face
- several extensions comprising several hairs, which are connected by a fixing element said extensions being aligned and basically in parallel with their fixing elements located on the support tape, said fixing elements being connecting means to connect the extensions to head hair.

15. An assembly according to one of the claims 13 or 14, wherein said support tape is transparent.

16. An assembly according to one of the claims 13 to 15, wherein the fixing elements are made of a thermoplastic material.

17. An assembly according to claim 16, wherein the thermoplastic material is made of a polyester and/or polyamide and/or polyurethane.

18. An assembly according to one of the claims 13 to 17, wherein a protective tape is provided on said support tape to be removed before adhering the support tape to the head hair.

19. An assembly according to one of the claims 13 to 18, wherein the support tape is resistant to heat.

20. An assembly according to one of the claims 13 to 19, wherein the fixing elements include the decorative elements.

21. An assembly according to one of the claims 13 to 20, wherein the adhesive face of the support tape is based upon an adhesive of a non-permanent and revisable type operated by pressure and with an adhesive force on the support tape greater than that produced on the thermoplastic material of the fixing elements.

22. An assembly according to one of the claims 13 to 21, wherein the connecting means comprises an adhesive substance comprised of a thermoplastic material, thermosetting material, heat activated glues or glues activated by exposure to air.

23. An assembly according to one of the claims 13 to 22, wherein the fixing elements are arranged along a straight line with spaces between them on the support tape.

24. An assembly according to one of the claims 13 to 23, wherein the hair of the extensions is of different color than that of the head hair.

25. An assembly according to one of the claims 13 to 24, wherein the fixing elements consist of plates having at least layers of plastic with different melting points.