(12) INTERNATIONAL APPLICATION PUBLISHED UNDER THE PATENT COOPERATION TREATY (PCT)

(19) World Intellectual Property Organization
International Bureau

(43) International Publication Date
7 June 2007 (07.06.2007)

PCT

(10) International Publication Number
WO 2007/062507 A1

(51) International Patent Classification:
A47C 7/62 (2006.01) *F16M 11/42* (2006.01)
A47C 1/00 (2006.01) *G06F 19/00* (2006.01)
A63F 13/00 (2006.01) *G09B 9/00* (2006.01)
F16M 11/22 (2006.01)

(21) International Application Number:
PCT/CA2006/001902

(22) International Filing Date:
21 November 2006 (21.11.2006)

(25) Filing Language: English

(26) Publication Language: English

(30) Priority Data:
11/289,352 30 November 2005 (30.11.2005) US

(71) Applicant *(for all designated States except US)*: **D-BOX TECHNOLOGIES INC.** [CA/CA]; 2172 De La Province, Longueuil, Québec J4G 1R7 (CA).

(72) Inventors; and
(75) Inventors/Applicants *(for US only)*: **ORBAN, Gauthier** [CA/CA]; 94 Des Iles Percées, Boucherville, Québec J4B 2N9 (CA). **BÉRUBÉ, Michel** [CA/CA]; 5381 Marie-victorin, Contrecoeur, Québec J0L 1C0 (CA). **ROY, Philippe** [CA/CA]; 121 Frontenac St. E., St-Bruno, Québec J3V 6J3 (CA).

(74) Agent: **OGILVY RENAULT LLP/S.E.N.C.R.L., s.r.l.**; Suite 1600, 1981 Mcgill College Avenue, Montréal, Québec H3A 2Y3 (CA).

(81) Designated States *(unless otherwise indicated, for every kind of national protection available)*: AE, AG, AL, AM, AT, AU, AZ, BA, BB, BG, BR, BW, BY, BZ, CA, CH, CN, CO, CR, CU, CZ, DE, DK, DM, DZ, EC, EE, EG, ES, FI, GB, GD, GE, GH, GM, GT, HN, HR, HU, ID, IL, IN, IS, JP, KE, KG, KM, KN, KP, KR, KZ, LA, LC, LK, LR, LS, LT, LU, LV, LY, MA, MD, MG, MK, MN, MW, MX, MY, MZ, NA, NG, NI, NO, NZ, OM, PG, PH, PL, PT, RO, RS, RU, SC, SD, SE, SG, SK, SL, SM, SV, SY, TJ, TM, TN, TR, TT, TZ, UA, UG, US, UZ, VC, VN, ZA, ZM, ZW.

(84) Designated States *(unless otherwise indicated, for every kind of regional protection available)*: ARIPO (BW, GH,

[Continued on next page]

(54) Title: ACTUATED SUPPORT PLATFORM FOR VIDEO SYSTEM

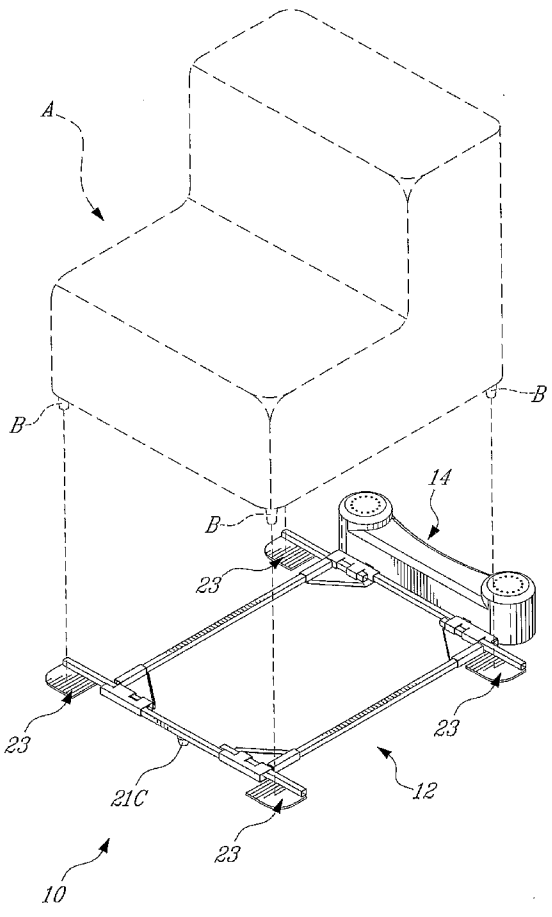

(57) Abstract: An actuated support frame (10) for transmitting motion to a seat with respect to a ground as a function of motion signals associated with video output, comprises a frame (12,12',12",112). The frame (12,12',12",112) is expandable/retractable along translational degrees of freedom. Support surfaces (23,23') are provided on the frame (12,12',12",112). The support surfaces (23,23') are displaceable with respect to one another by expansion/retraction of the frame (12,12',12",112) so as to be sized to support a seat (A). Actuators (41) are provided between the frame (12,12',12",112) and the ground. The actuators (41) receive signals and selectively displace the frame (12,12',12",112) with respect to the ground in synchronization with a video output, whereby a seat (A) supported on the frame (12,12',12",112) is displaceable within the frame (12,12',12",112). A method for installing a seating system of a motion simulator system is also provided.

WO 2007/062507 A1

GM, KE, LS, MW, MZ, NA, SD, SL, SZ, TZ, UG, ZM, ZW), Eurasian (AM, AZ, BY, KG, KZ, MD, RU, TJ, TM), European (AT, BE, BG, CH, CY, CZ, DE, DK, EE, ES, FI, FR, GB, GR, HU, IE, IS, IT, LT, LU, LV, MC, NL, PL, PT, RO, SE, SI, SK, TR), OAPI (BF, BJ, CF, CG, CI, CM, GA, GN, GQ, GW, ML, MR, NE, SN, TD, TG).

Published:
— *with international search report*

For two-letter codes and other abbreviations, refer to the "Guidance Notes on Codes and Abbreviations" appearing at the beginning of each regular issue of the PCT Gazette.