(12) INTERNATIONAL APPLICATION PUBLISHED UNDER THE PATENT COOPERATION TREATY (PCT)

(19) World Intellectual Property Organization
International Bureau

(43) International Publication Date
3 January 2002 (03.01.2002)

PCT

(10) International Publication Number
WO 02/00347 A2

(51) International Patent Classification[7]: B01L 3/00

(21) International Application Number: PCT/US01/20707

(22) International Filing Date: 28 June 2001 (28.06.2001)

(25) Filing Language: English

(26) Publication Language: English

(30) Priority Data:

60/214,642	28 June 2000 (28.06.2000)	US
60/214,508	28 June 2000 (28.06.2000)	US
60/237,051	2 October 2000 (02.10.2000)	US
60/260,063	6 January 2001 (06.01.2001)	US
60/284,637	18 April 2001 (18.04.2001)	US

(71) Applicant: **3M INNOVATIVE PROPERTIES COMPANY** [US/US]; 3M Center, Post Office Box 33427, Saint Paul, MN 55133-3427 (US).

(72) Inventors: **BEDINGHAM, William**; Post Office Box 33427, Saint Paul, MN 55133-3427 (US). **RAJAGOPAL, Raj**; Post Office Box 33427, Saint Paul, MN 55133-3427 (US). **ROBOLE, Barry, W.**; Post Office Box 33427, Saint Paul, MN 55133-3427 (US). **SESHADRI, Kannan**; Post Office Box 33427, Saint Paul, MN 55133-3427 (US).

(74) Agents: **SPRAGUE, Robert W.** et al.; Office of Intellectual Property Counsel, Post Office Box 33427, Saint Paul, MN 55133-3427 (US).

(81) Designated States *(national)*: AE, AG, AL, AM, AT, AT (utility model), AU, AZ, BA, BB, BG, BR, BY, BZ, CA, CH, CN, CO, CR, CU, CZ, CZ (utility model), DE, DE (utility model), DK, DK (utility model), DM, DZ, EC, EE, EE (utility model), ES, FI, FI (utility model), GB, GD, GE, GH, GM, HR, HU, ID, IL, IN, IS, JP, KE, KG, KP, KR, KZ, LC, LK, LR, LS, LT, LU, LV, MA, MD, MG, MK, MN, MW, MX, MZ, NO, NZ, PL, PT, RO, RU, SD, SE, SG, SI, SK, SK (utility model), SL, TJ, TM, TR, TT, TZ, UA, UG, UZ, VN, YU, ZA, ZW.

(84) Designated States *(regional)*: ARIPO patent (GH, GM, KE, LS, MW, MZ, SD, SL, SZ, TZ, UG, ZW), Eurasian patent (AM, AZ, BY, KG, KZ, MD, RU, TJ, TM), European patent (AT, BE, CH, CY, DE, DK, ES, FI, FR, GB, GR, IE, IT, LU, MC, NL, PT, SE, TR), OAPI patent (BF, BJ, CF, CG, CI, CM, GA, GN, GW, ML, MR, NE, SN, TD, TG).

Published:
— *without international search report and to be republished upon receipt of that report*

[Continued on next page]

(54) Title: ENHANCED SAMPLE PROCESSING DEVICES, SYSTEMS AND METHODS

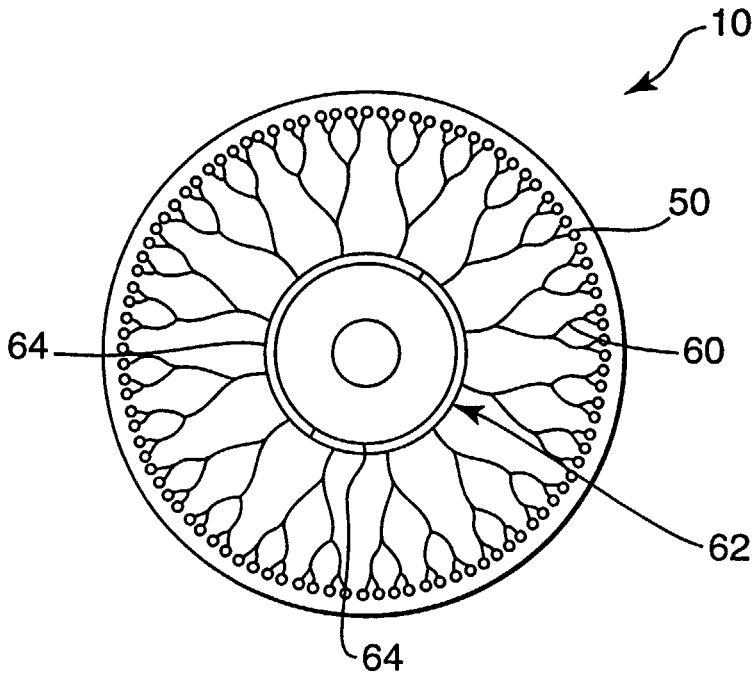

(57) Abstract: Devices, systems, and methods for processing sample materials. The sample materials may be located in a plurality of process chambers in the device, which is rotated during heating of the sample materials.

WO 02/00347 A2

For two-letter codes and other abbreviations, refer to the "Guidance Notes on Codes and Abbreviations" appearing at the beginning of each regular issue of the PCT Gazette.