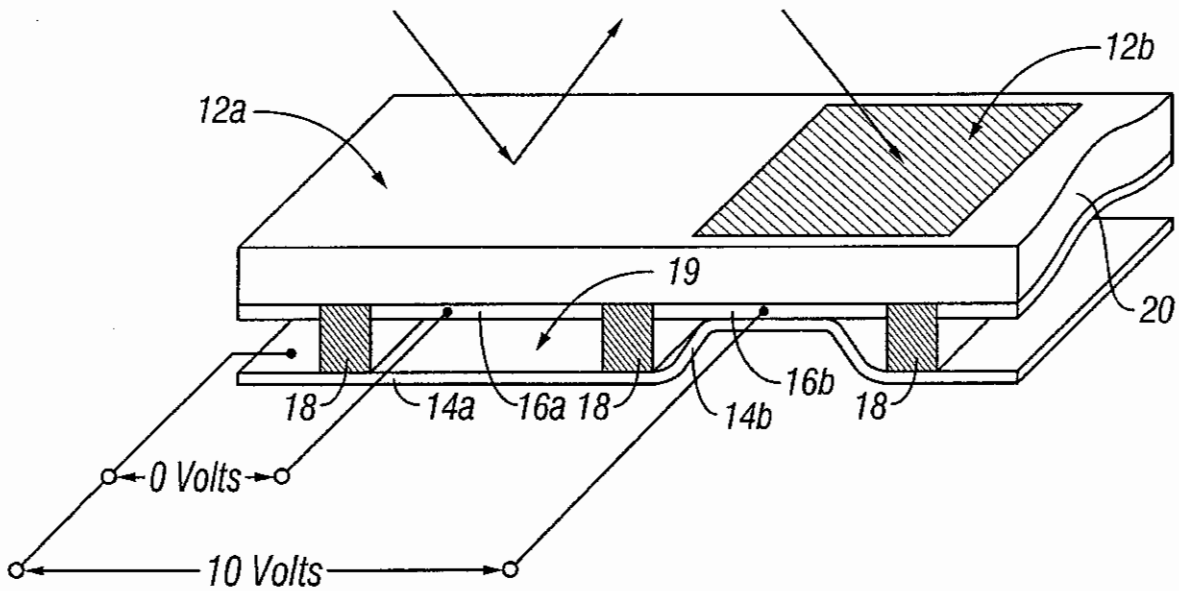

FIG. 1

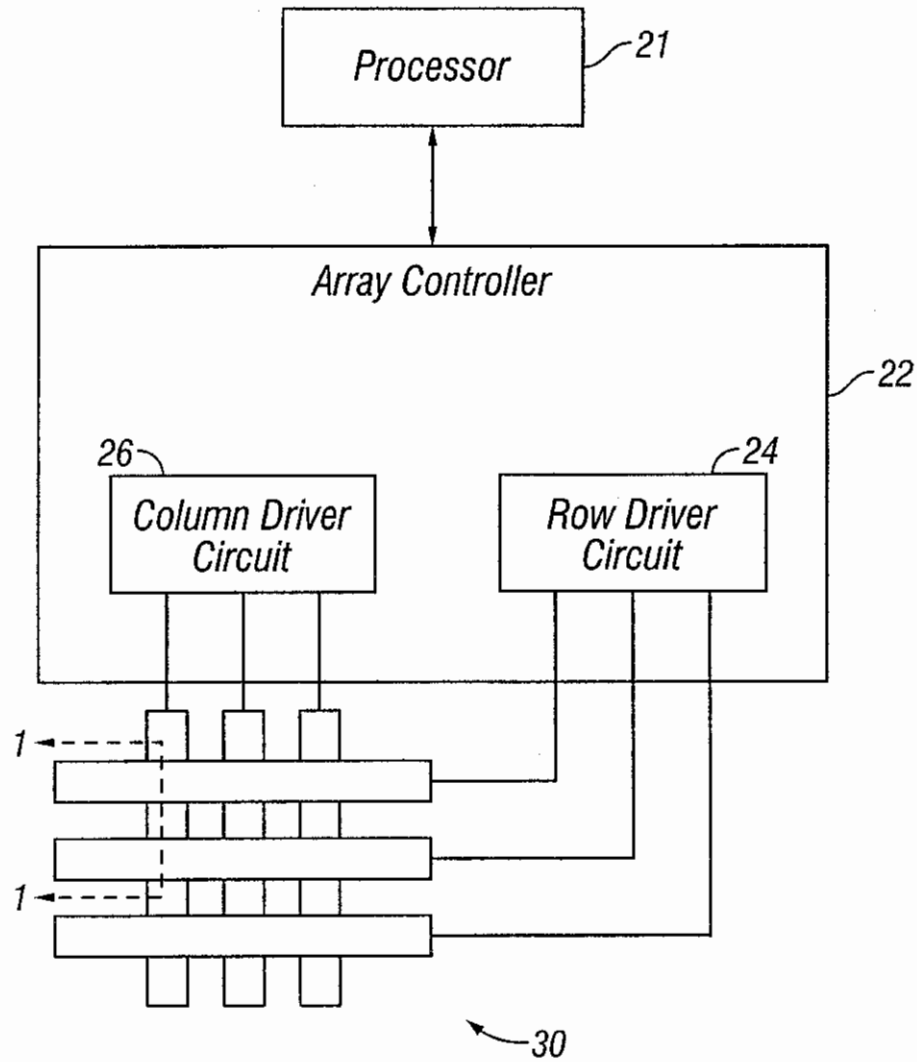
Processor
21
Array Controller
22
26
Column Driver Circuit
24
Row Driver Circuit
1
1
30

FIG. 2

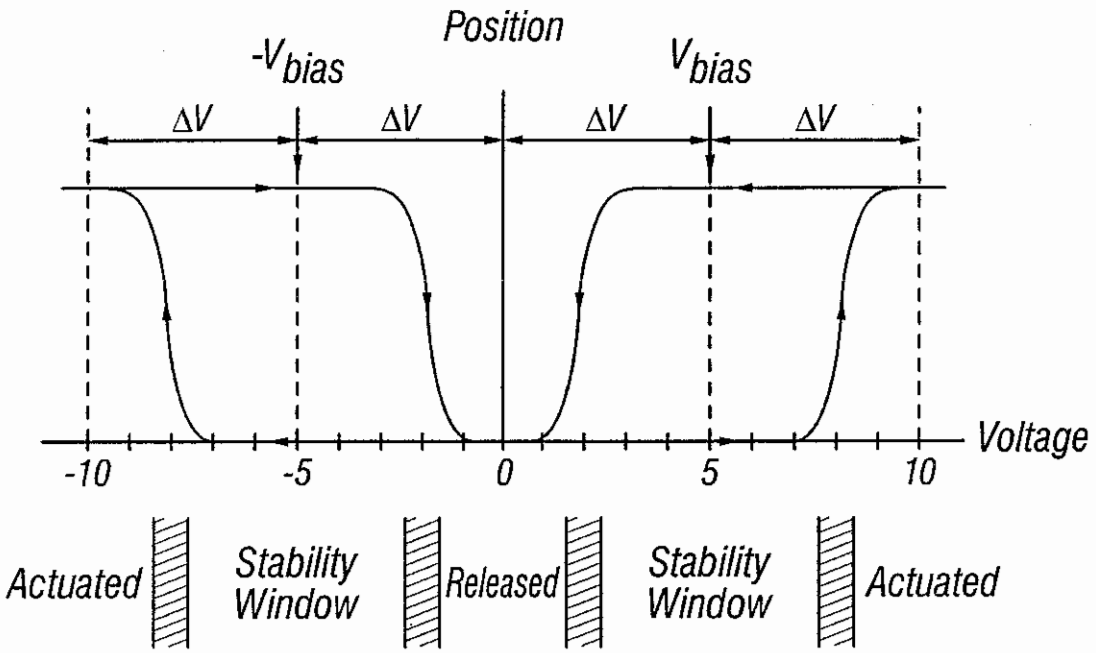

FIG. 3

Row Output Signals	Column Output Signals: $+V_{bias}$	Column Output Signals: $-V_{bias}$
0	Stable	Stable
$+\Delta V$	Release	Actuate
$-\Delta V$	Actuate	Release

FIG. 4

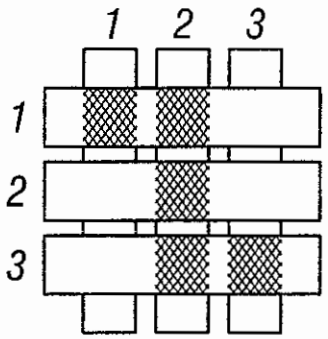
1
2
3
1
2
3

FIG. 5A

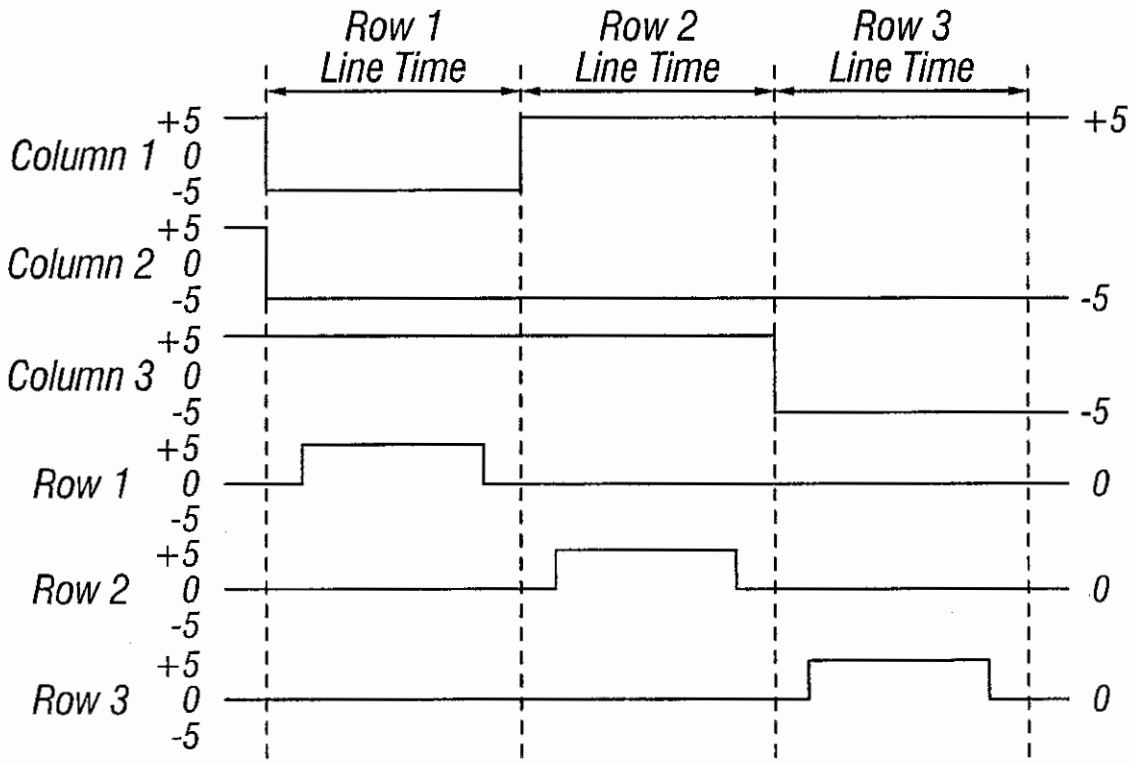
Row 1 Line Time
Row 2 Line Time
Row 3 Line Time
Column 1
Column 2
Column 3
Row 1
Row 2
Row 3
+5
0
-5
+5
-5
-5
0
0
0

FIG. 5B

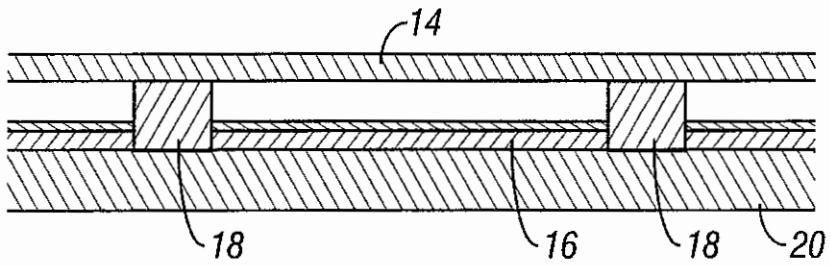

FIG. 6A

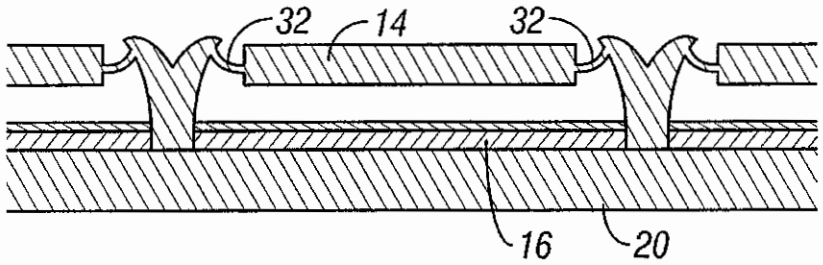

FIG. 6B

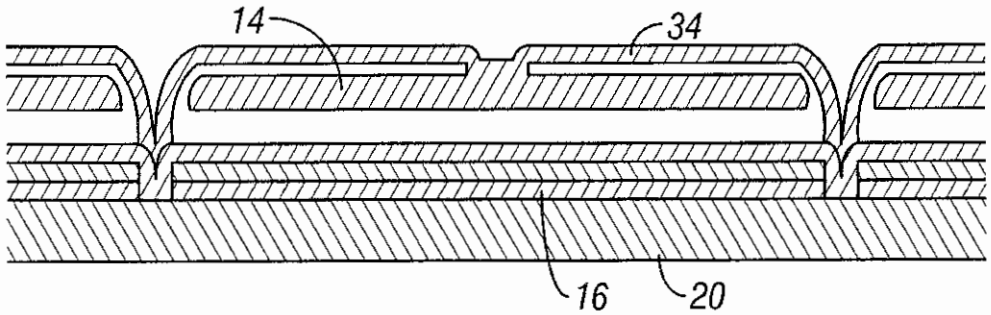

FIG. 6C

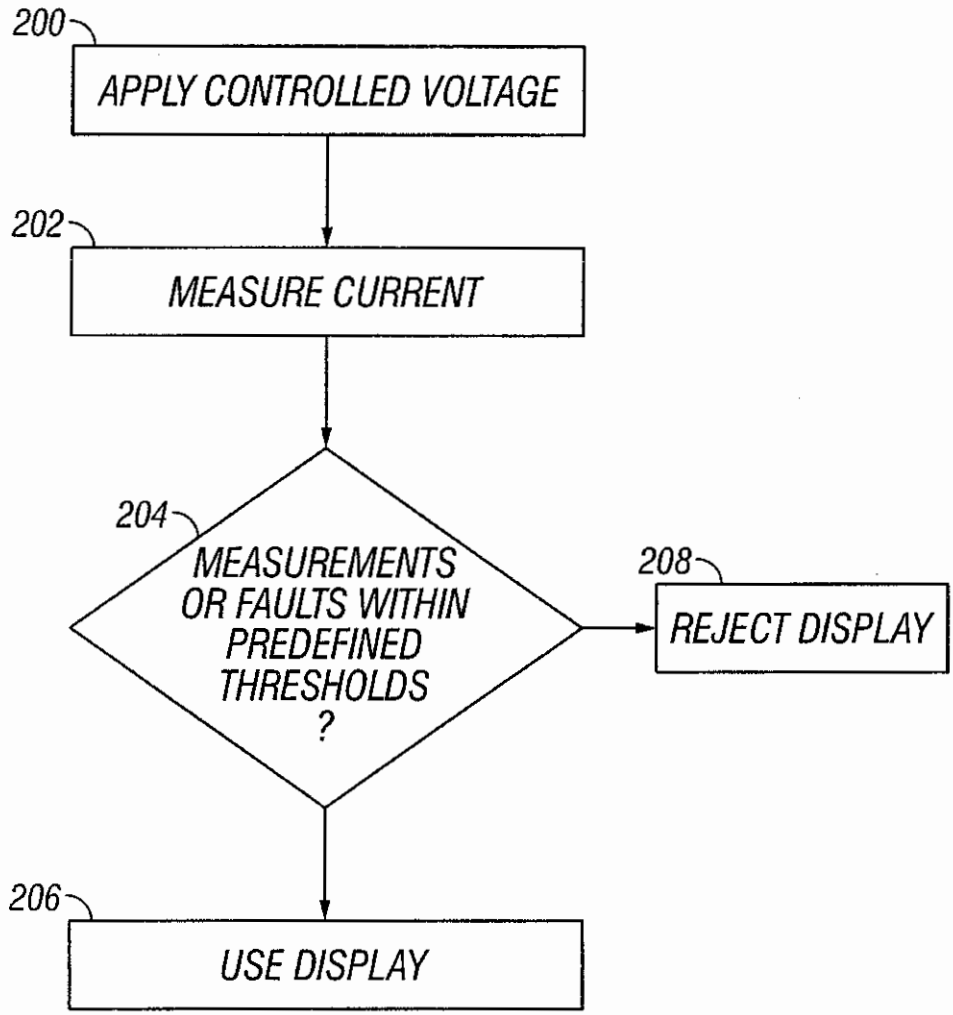
200
APPLY CONTROLLED VOLTAGE
202
MEASURE CURRENT
204
MEASUREMENTS OR FAULTS WITHIN PREDEFINED THRESHOLDS ?
208
REJECT DISPLAY
206
USE DISPLAY

FIG. 7

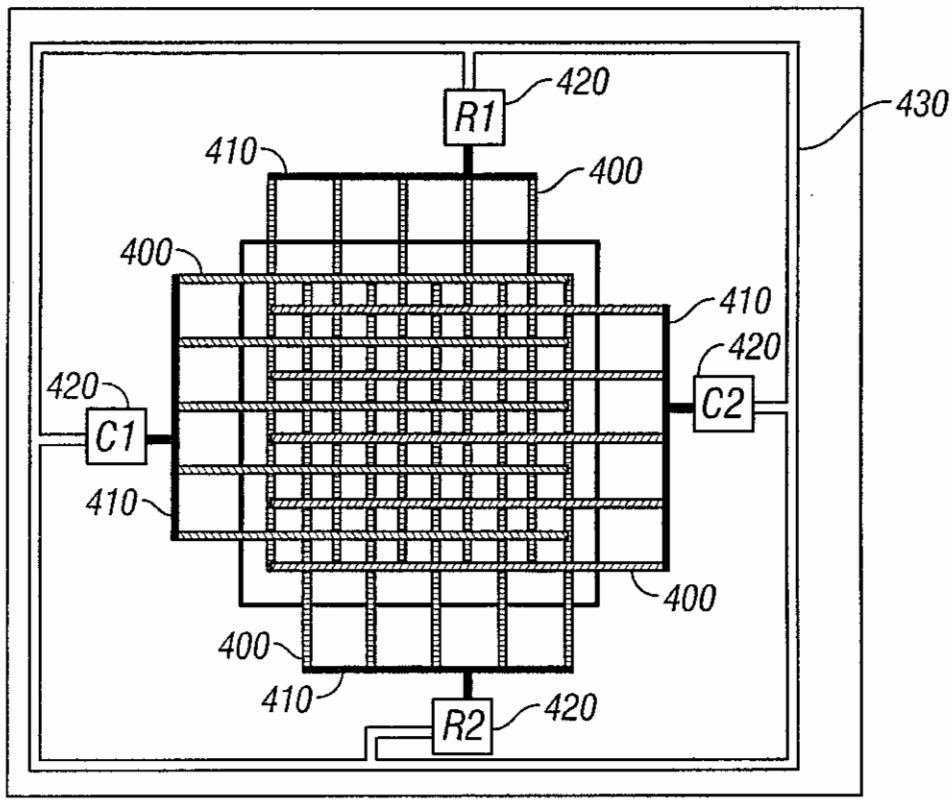

FIG. 8

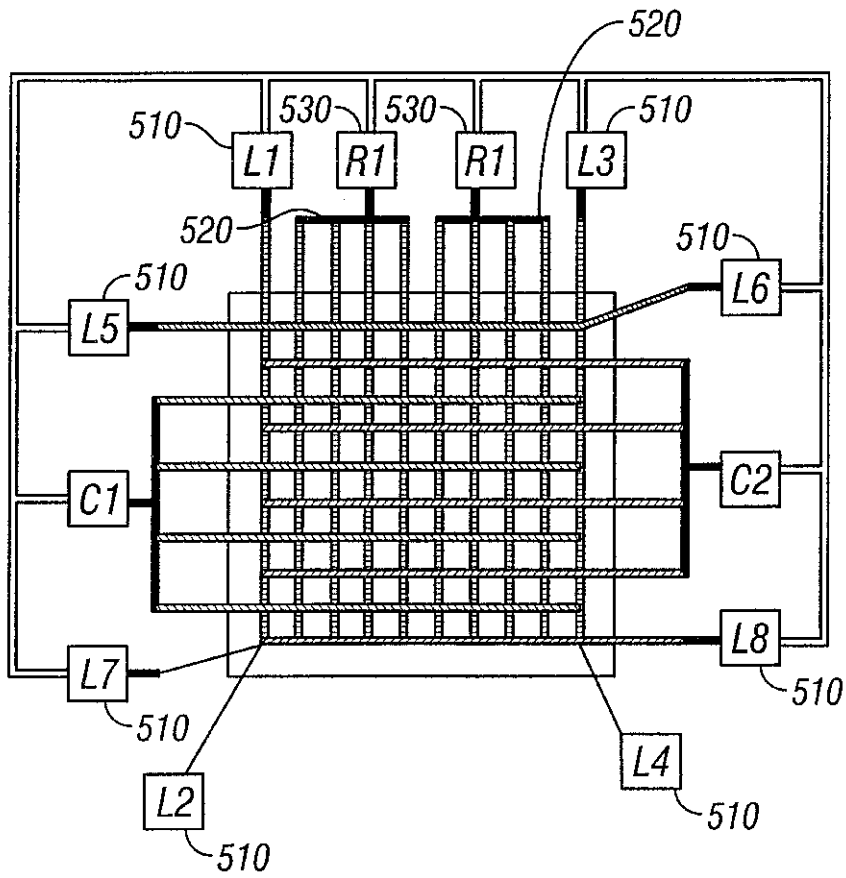
520
510
530
530
510
L1
R1
R1
L3
520
510
510
L6
L5
C1
C2
L8
510
L7
510
L4
L2
510
510

FIG. 9

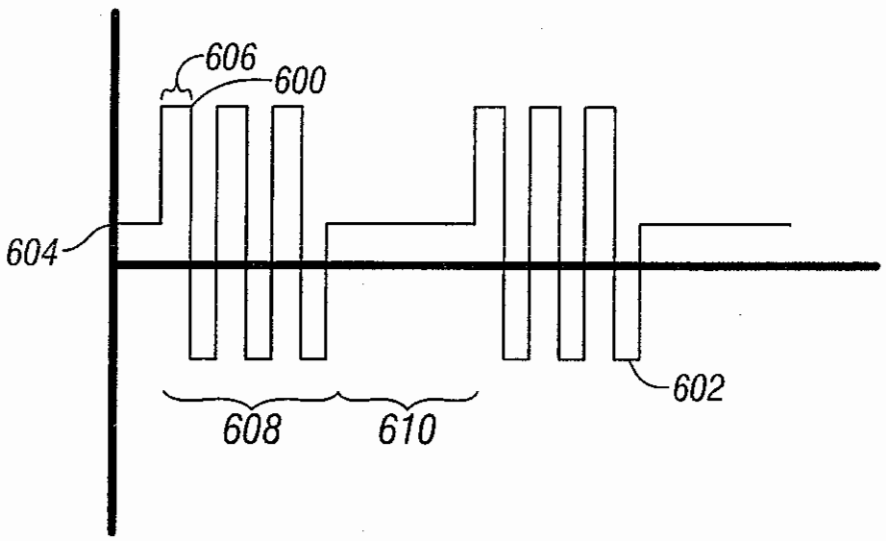

FIG. 10A

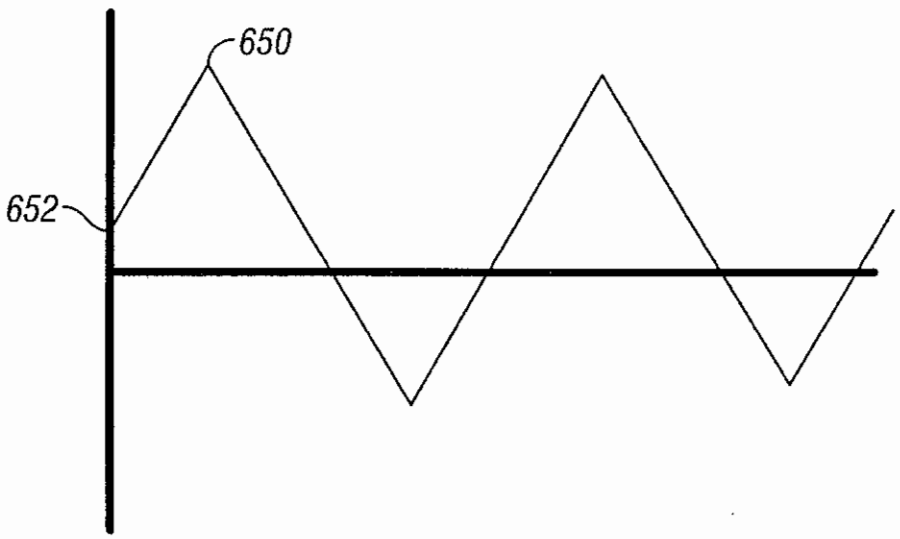

FIG. 10B