(12) INTERNATIONAL APPLICATION PUBLISHED UNDER THE PATENT COOPERATION TREATY (PCT)

(19) World Intellectual Property Organization
International Bureau

(43) International Publication Date
18 October 2018 (18.10.2018)

WIPO | PCT

(10) International Publication Number
WO 2018/190769 A1

(51) International Patent Classification:
C02F 1/30 (2006.01) *B01J 19/12* (2006.01)
B09B 3/00 (2006.01) *F26B 3/347* (2006.01)

(21) International Application Number:
PCT/SG2017/050212

(22) International Filing Date:
14 April 2017 (14.04.2017)

(25) Filing Language: English

(26) Publication Language: English

(71) Applicant: **TRIA PTE. LTD.** [SG/SG]; 9 Yishun Industrial Street 1, #03-65, North Spring Bizhub, Singapore 768163 (SG).

(72) Inventors: **TAN, Meng Chong**; 31 Bishan Street 11, Bishan Loft, #23-05, Singapore 579819 (SG). **NG, Pei Kang**; Blk 574, Hougang Street 51, #04-13, Singapore 530574 (SG).

(74) Agent: **ORION IP LLP**; 1 Sophia Road, #07-21, Peace Centre, Singapore 228149 (SG).

(81) Designated States *(unless otherwise indicated, for every kind of national protection available)*: AE, AG, AL, AM, AO, AT, AU, AZ, BA, BB, BG, BH, BN, BR, BW, BY, BZ, CA, CH, CL, CN, CO, CR, CU, CZ, DE, DJ, DK, DM, DO, DZ, EC, EE, EG, ES, FI, GB, GD, GE, GH, GM, GT, HN, HR, HU, ID, IL, IN, IR, IS, JP, KE, KG, KH, KN, KP, KR, KW, KZ, LA, LC, LK, LR, LS, LU, LY, MA, MD, ME, MG, MK, MN, MW, MX, MY, MZ, NA, NG, NI, NO, NZ, OM, PA, PE, PG, PH, PL, PT, QA, RO, RS, RU, RW, SA, SC, SD, SE, SG, SK, SL, SM, ST, SV, SY, TH, TJ, TM, TN, TR, TT, TZ, UA, UG, US, UZ, VC, VN, ZA, ZM, ZW.

(84) Designated States *(unless otherwise indicated, for every kind of regional protection available)*: ARIPO (BW, GH, GM, KE, LR, LS, MW, MZ, NA, RW, SD, SL, ST, SZ, TZ, UG, ZM, ZW), Eurasian (AM, AZ, BY, KG, KZ, RU, TJ, TM), European (AL, AT, BE, BG, CH, CY, CZ, DE, DK, EE, ES, FI, FR, GB, GR, HR, HU, IE, IS, IT, LT, LU, LV, MC, MK, MT, NL, NO, PL, PT, RO, RS, SE, SI, SK, SM, TR), OAPI (BF, BJ, CF, CG, CI, CM, GA, GN, GQ, GW, KM, ML, MR, NE, SN, TD, TG).

Published:
— *with international search report (Art. 21(3))*

(54) Title: APPARATUS FOR TREATING MIXED WASTE AND METHOD THEREOF

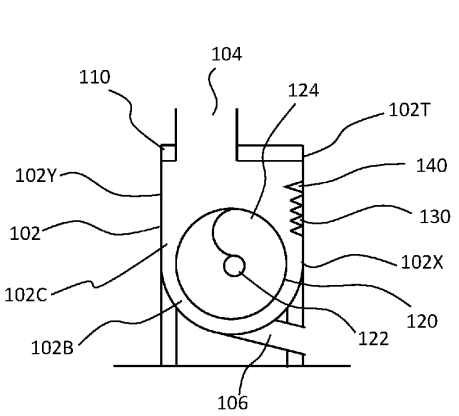

Fig. 1A

(57) Abstract: The present invention relates to an apparatus for treating mixed waste, for example, an apparatus for degrading bioplastic material in the mixed waste. The apparatus includes an electromagnetic wave emitter adapted to emit an electromagnetic wave on to the mixed waste; a movement inducing device adapted to move the mixed waste when the electromagnetic wave is being emitted onto the mixed waste such that the mixed waste is moved to increase the exposure of the mixed waste to the electromagnetic wave; and at least one of a heat emitter adapted to emit heat and a moisture emitter adapted to emit moisture onto the mixed waste. The present invention further relates to a method of treating mixed waste.

WO 2018/190769 A1