(12) INTERNATIONAL APPLICATION PUBLISHED UNDER THE PATENT COOPERATION TREATY (PCT)

(19) World Intellectual Property Organization
International Bureau

(43) International Publication Date
26 June 2008 (26.06.2008)

PCT

(10) International Publication Number
WO 2008/076855 A1

(51) International Patent Classification:
E21B 23/03 (2006.01) *F16K 3/02* (2006.01)

(21) International Application Number:
PCT/US2007/087511

(22) International Filing Date:
14 December 2007 (14.12.2007)

(25) Filing Language: English

(26) Publication Language: English

(30) Priority Data:
11/639,868 15 December 2006 (15.12.2006) US

(71) Applicant *(for all designated States except US)*: **VETCO GRAY INC** [US/US]; 3010 Briarpark Drive, Suite 300, Houston, TX 77042 (US).

(72) Inventor; and

(75) Inventor/Applicant *(for US only)*: **HUNTER, Rick, C.** [US/US]; 716 Pin Oak, Friendswood, TX 77546 (US).

(74) Agent: **BRADLEY, James, E.**; Bracewell & Giuliani LLP, 711 Louisiana Street, Suite 2300, Houston, TX 77002-2700 (US).

(81) Designated States *(unless otherwise indicated, for every kind of national protection available)*: AE, AG, AL, AM, AT, AU, AZ, BA, BB, BG, BH, BR, BW, BY, BZ, CA, CH, CN, CO, CR, CU, CZ, DE, DK, DM, DO, DZ, EC, EE, EG, ES, FI, GB, GD, GE, GH, GM, GT, HN, HR, HU, ID, IL, IN, IS, JP, KE, KG, KM, KN, KP, KR, KZ, LA, LC, LK, LR, LS, LT, LU, LY, MA, MD, ME, MG, MK, MN, MW, MX, MY, MZ, NA, NG, NI, NO, NZ, OM, PG, PH, PL, PT, RO, RS, RU, SC, SD, SE, SG, SK, SL, SM, SV, SY, TJ, TM, TN, TR, TT, TZ, UA, UG, US, UZ, VC, VN, ZA, ZM, ZW.

(84) Designated States *(unless otherwise indicated, for every kind of regional protection available)*: ARIPO (BW, GH, GM, KE, LS, MW, MZ, NA, SD, SL, SZ, TZ, UG, ZM, ZW), Eurasian (AM, AZ, BY, KG, KZ, MD, RU, TJ, TM), European (AT, BE, BG, CH, CY, CZ, DE, DK, EE, ES, FI, FR, GB, GR, HU, IE, IS, IT, LT, LU, LV, MC, MT, NL, PL, PT, RO, SE, SI, SK, TR), OAPI (BF, BJ, CF, CG, CI, CM, GA, GN, GQ, GW, ML, MR, NE, SN, TD, TG).

Published:
— *with international search report*

[Continued on next page]

(54) **Title:** LOW FRICTION COATINGS FOR DYNAMICALLY ENGAGING LOAD BEARING SURFACES

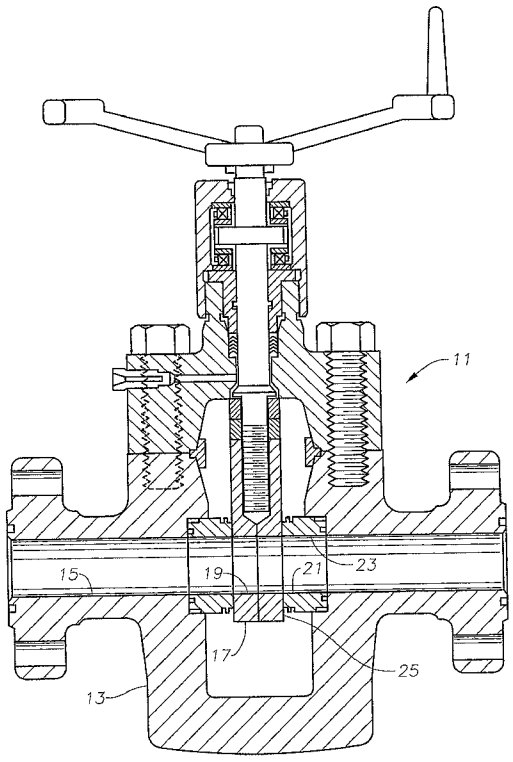

(57) **Abstract:** A gate valve (11) has a body (13), the body having a cavity and a flow passage (15) intersecting the cavity. A seat ring (21) is mounted to the body at the intersection of the flow passage and the cavity, the seat ring having an engaging face (25). A gate (17) in the cavity has an engaging face that slidingly engages the face of the seat ring while being moved between open and closed positions. A friction-resistant coating is on at least one of the faces.

WO 2008/076855 A1

— *before the expiration of the time limit for amending the claims and to be republished in the event of receipt of amendments*