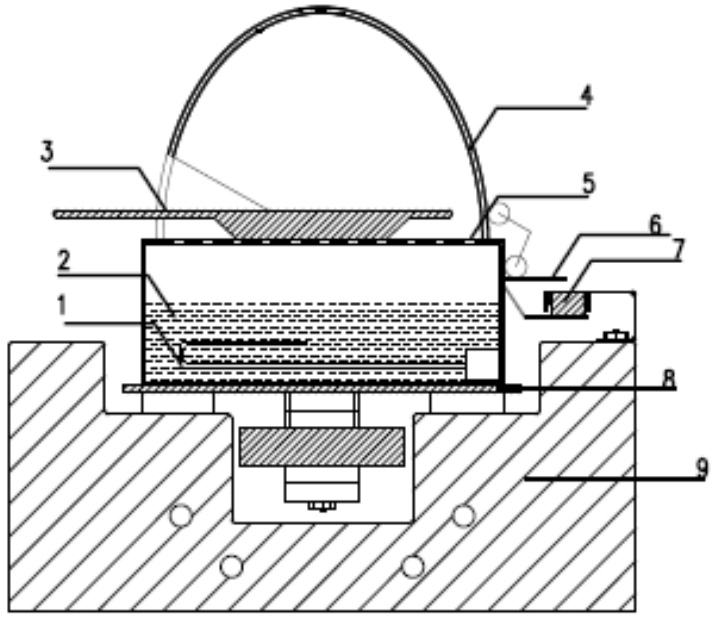

Fig. 1 Section

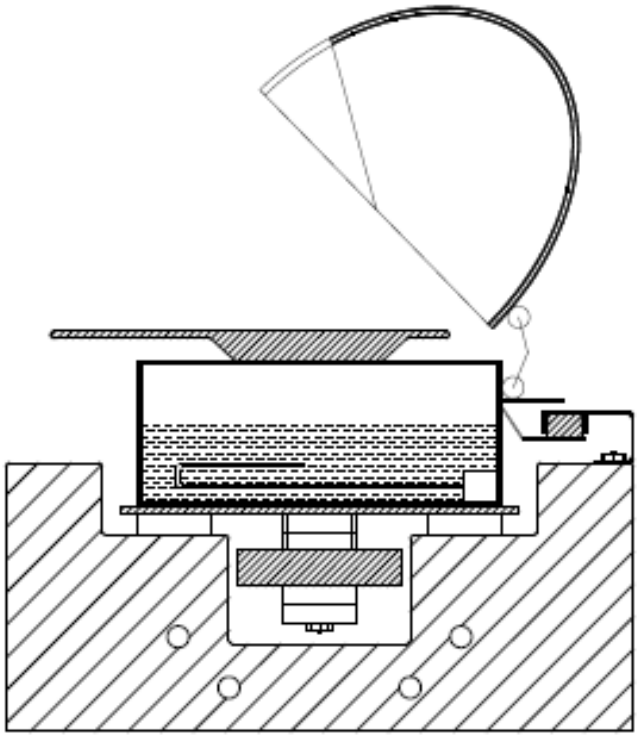

Fig. 1.1 Open

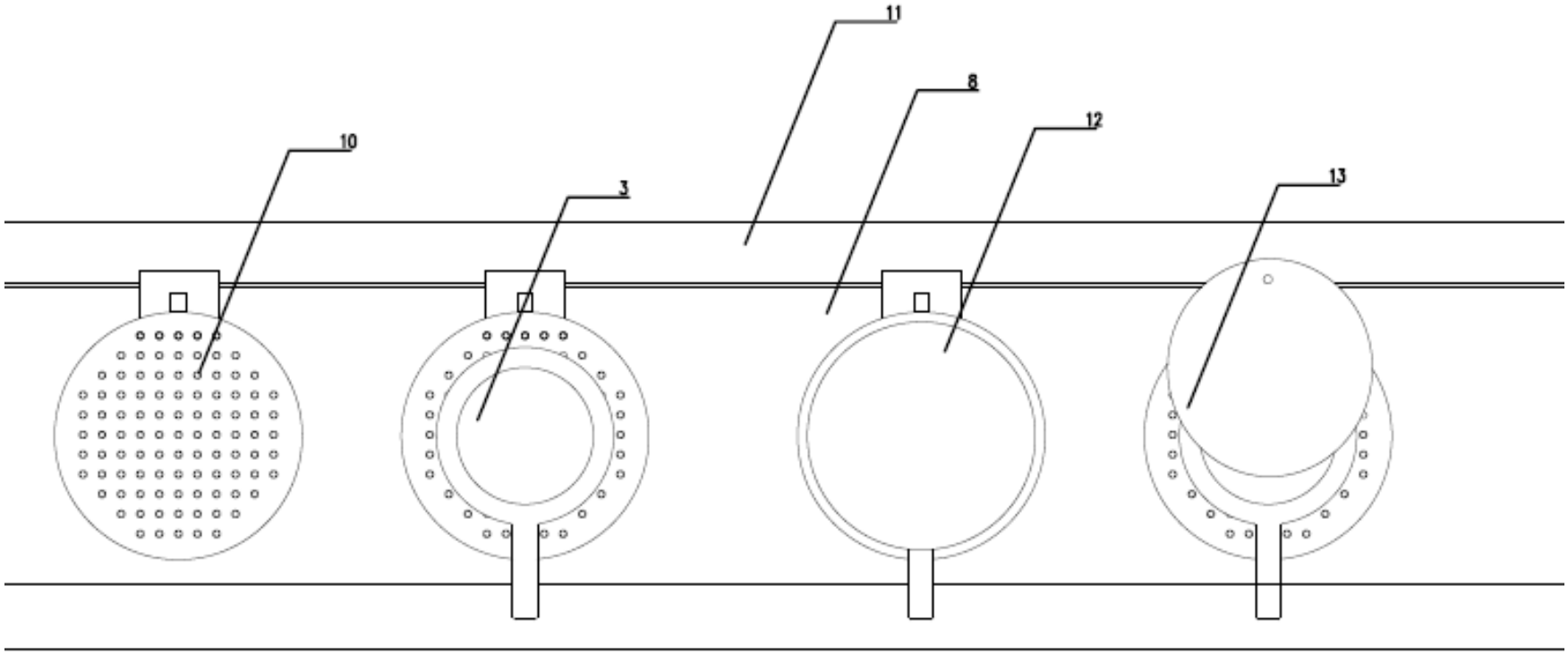

Fig. 2 Top View

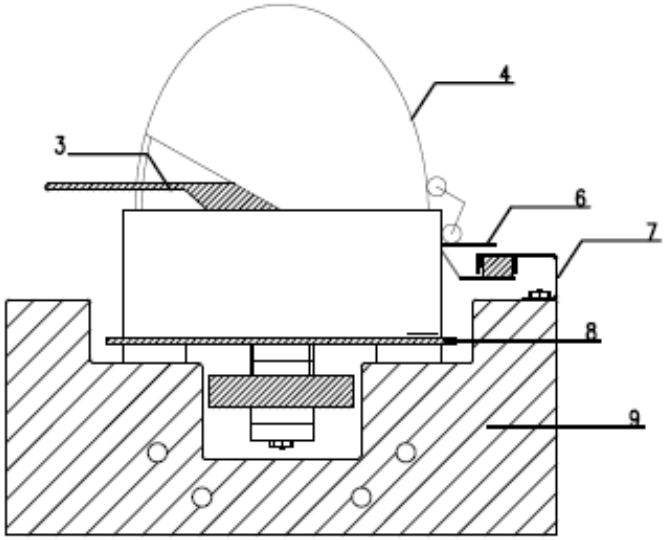

Fig. 3 Close

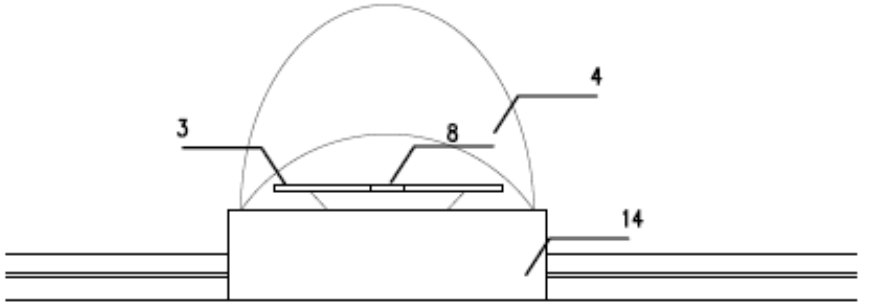

Fig. 4 Front view

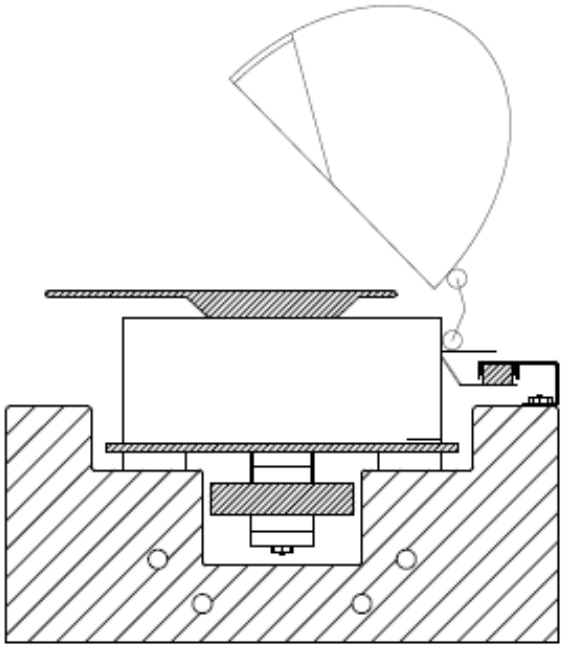

Fig. 3.1 Open