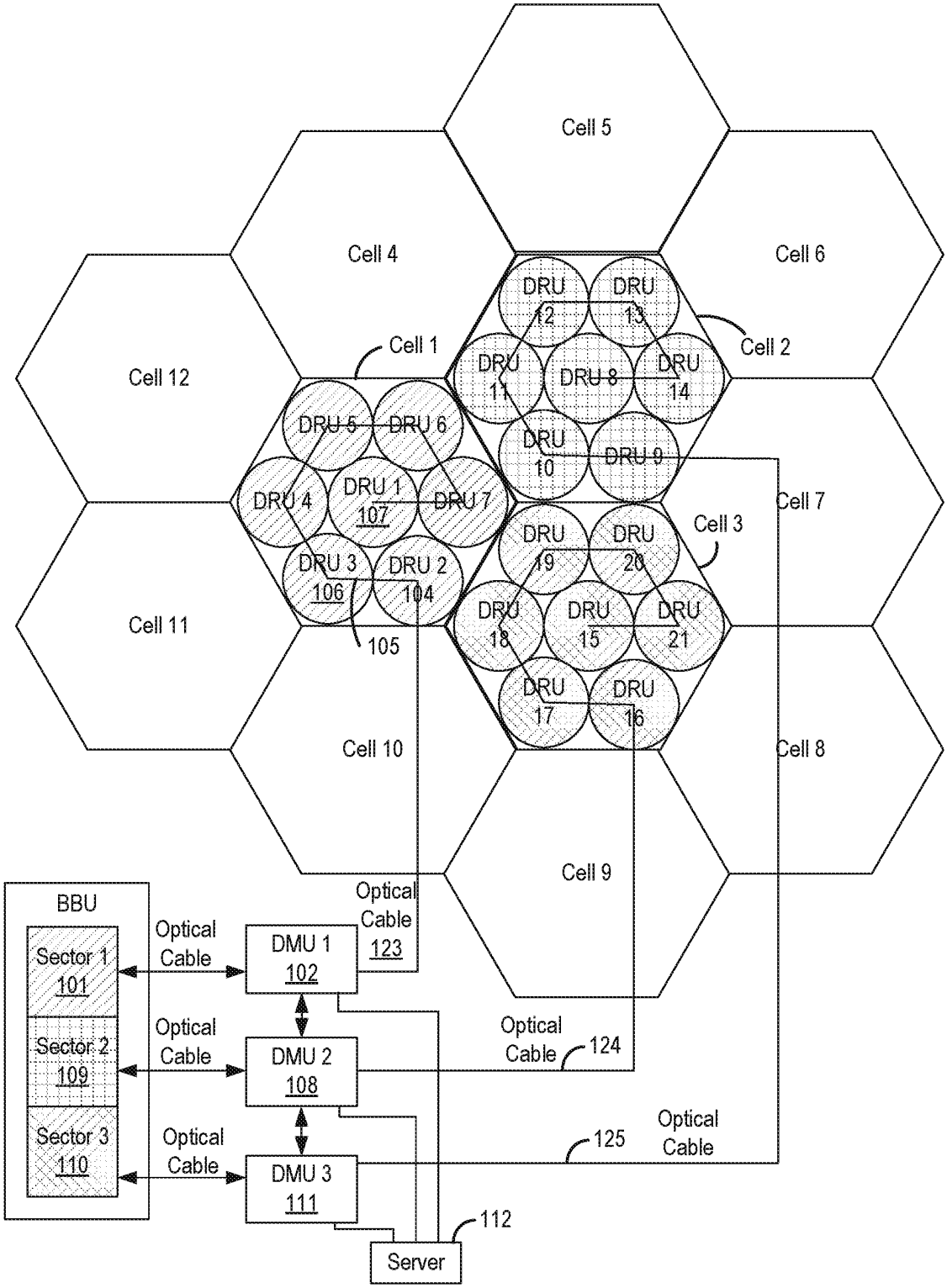
Cell 5
Cell 4
Cell 6
Cell 12
Cell 1
Cell 2
DRU 12
DRU 13
DRU 11
DRU 8
DRU 14
DRU 5
DRU 6
DRU 10
DRU 9
DRU 4
DRU 1
107
DRU 7
Cell 7
Cell 3
DRU 19
DRU 20
DRU 3
106
DRU 2
104
DRU 18
DRU 15
DRU 21
Cell 11
105
DRU 17
DRU 16
Cell 10
Cell 8
Cell 9
BBU
Optical Cable
123
Sector 1
101
Optical Cable
DMU 1
102
Sector 2
109
Optical Cable
DMU 2
108
Optical Cable
124
Sector 3
110
Optical Cable
125
Optical Cable
DMU 3
111
112
Server

FIG. 1

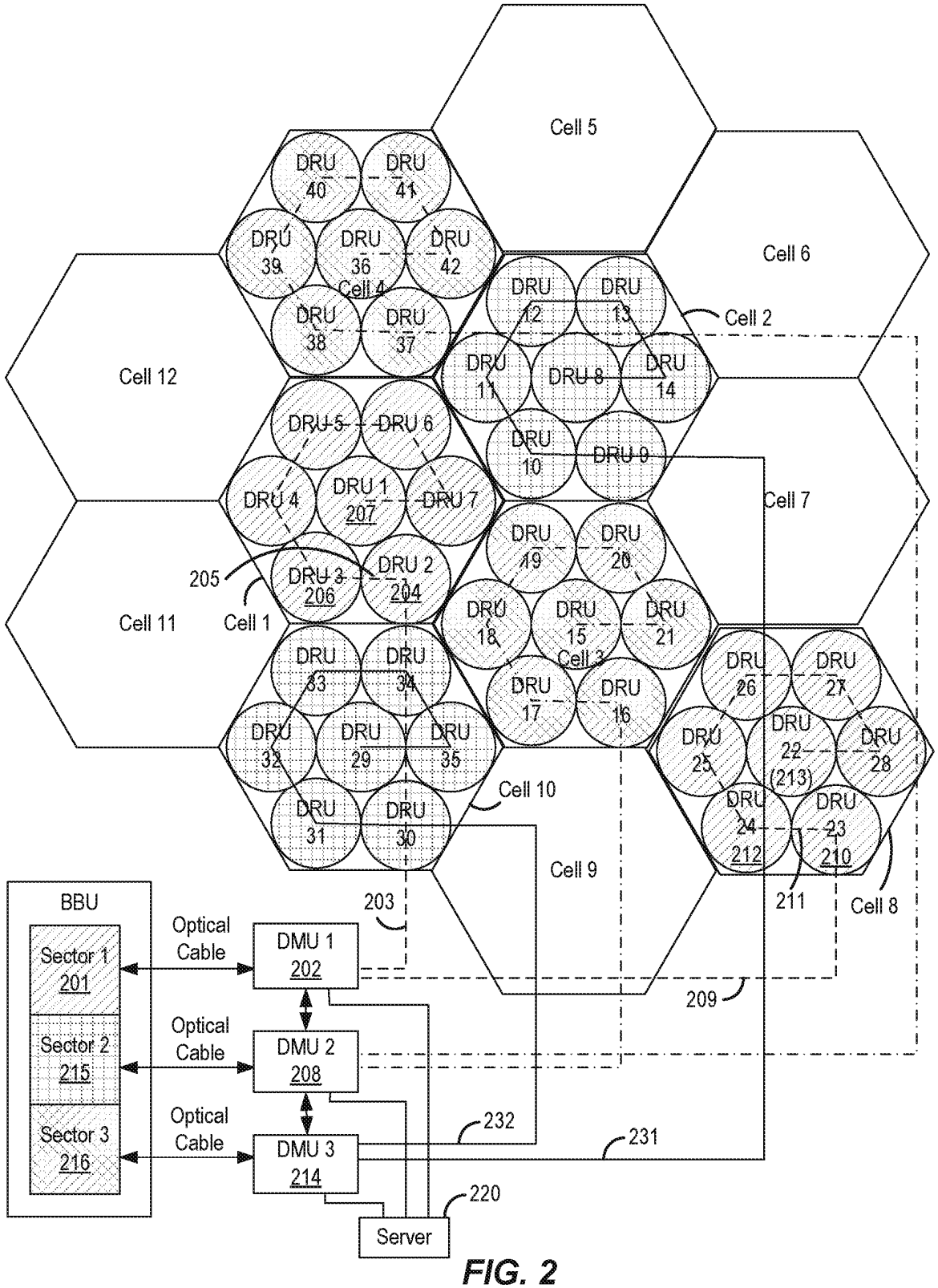
Cell 5
Cell 6
Cell 12
Cell 2
Cell 7
Cell 11
Cell 1
Cell 4
Cell 3
Cell 10
Cell 9
Cell 8
DRU 40
DRU 41
DRU 39
DRU 36
DRU 42
DRU 38
DRU 37
DRU 12
DRU 13
DRU 11
DRU 8
DRU 14
DRU 10
DRU 9
DRU 5
DRU 6
DRU 4
DRU 1
207
DRU 7
205
DRU 3
206
DRU 2
204
DRU 19
DRU 20
DRU 18
DRU 15
DRU 21
DRU 17
DRU 16
DRU 33
DRU 34
DRU 32
DRU 29
DRU 35
DRU 31
DRU 30
DRU 26
DRU 27
DRU 25
DRU 22
(213)
DRU 28
DRU 24
212
DRU 23
210
211
203
209
BBU
Sector 1
201
Sector 2
215
Sector 3
216
Optical
Cable
Optical
Cable
Optical
Cable
DMU 1
202
DMU 2
208
DMU 3
214
232
231
220
Server

FIG. 2

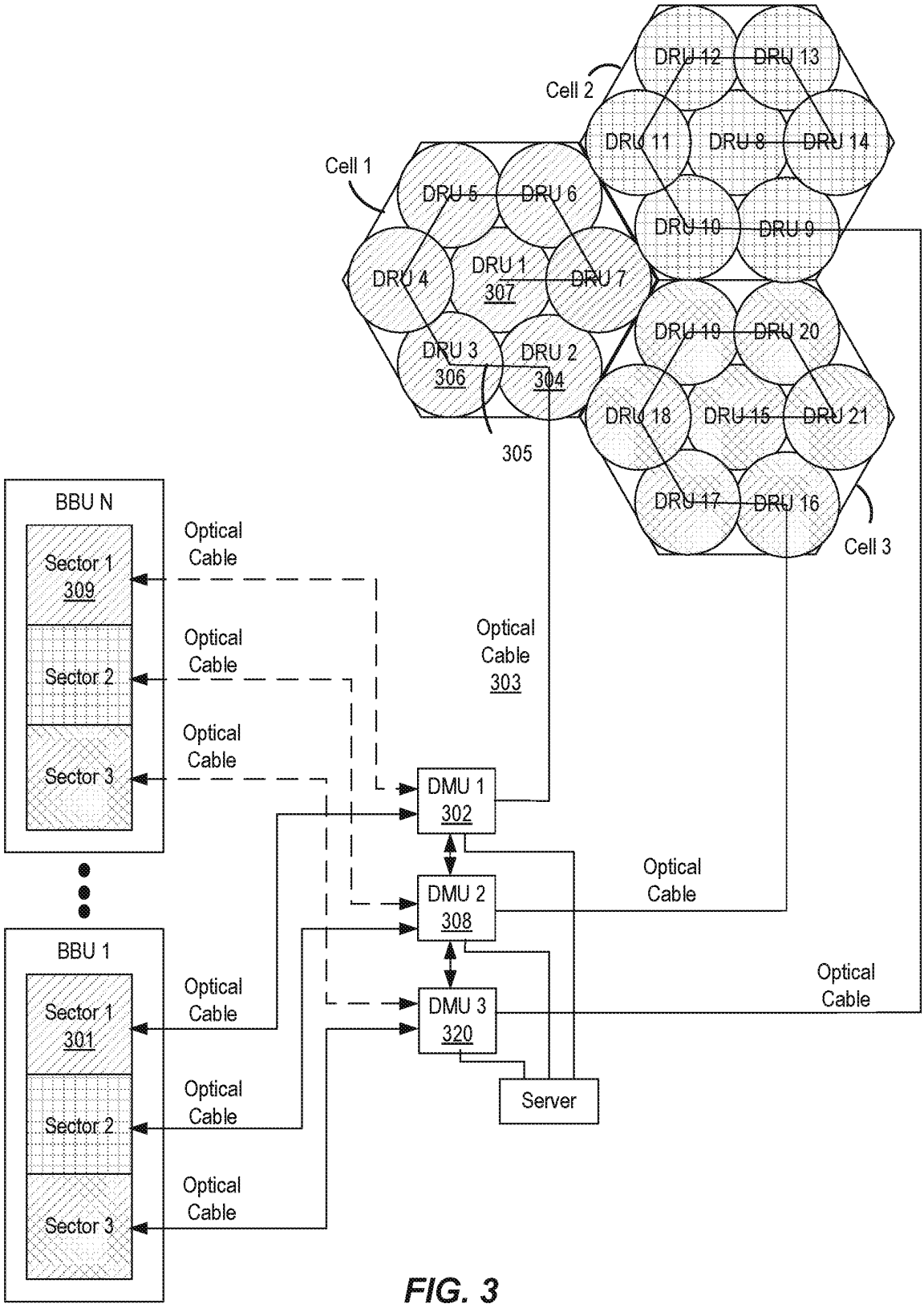
Cell 2
DRU 12
DRU 13
DRU 11
DRU 8
DRU 14
Cell 1
DRU 5
DRU 6
DRU 10
DRU 9
DRU 4
DRU 1
307
DRU 7
DRU 19
DRU 20
DRU 3
306
DRU 2
304
DRU 18
DRU 15
DRU 21
305
DRU 17
DRU 16
Cell 3
BBU N
Sector 1
309
Sector 2
Sector 3
Optical Cable
Optical Cable
Optical Cable
Optical Cable
303
DMU 1
302
DMU 2
308
DMU 3
320
Server
Optical Cable
Optical Cable
BBU 1
Sector 1
301
Sector 2
Sector 3
Optical Cable
Optical Cable
Optical Cable

FIG. 3

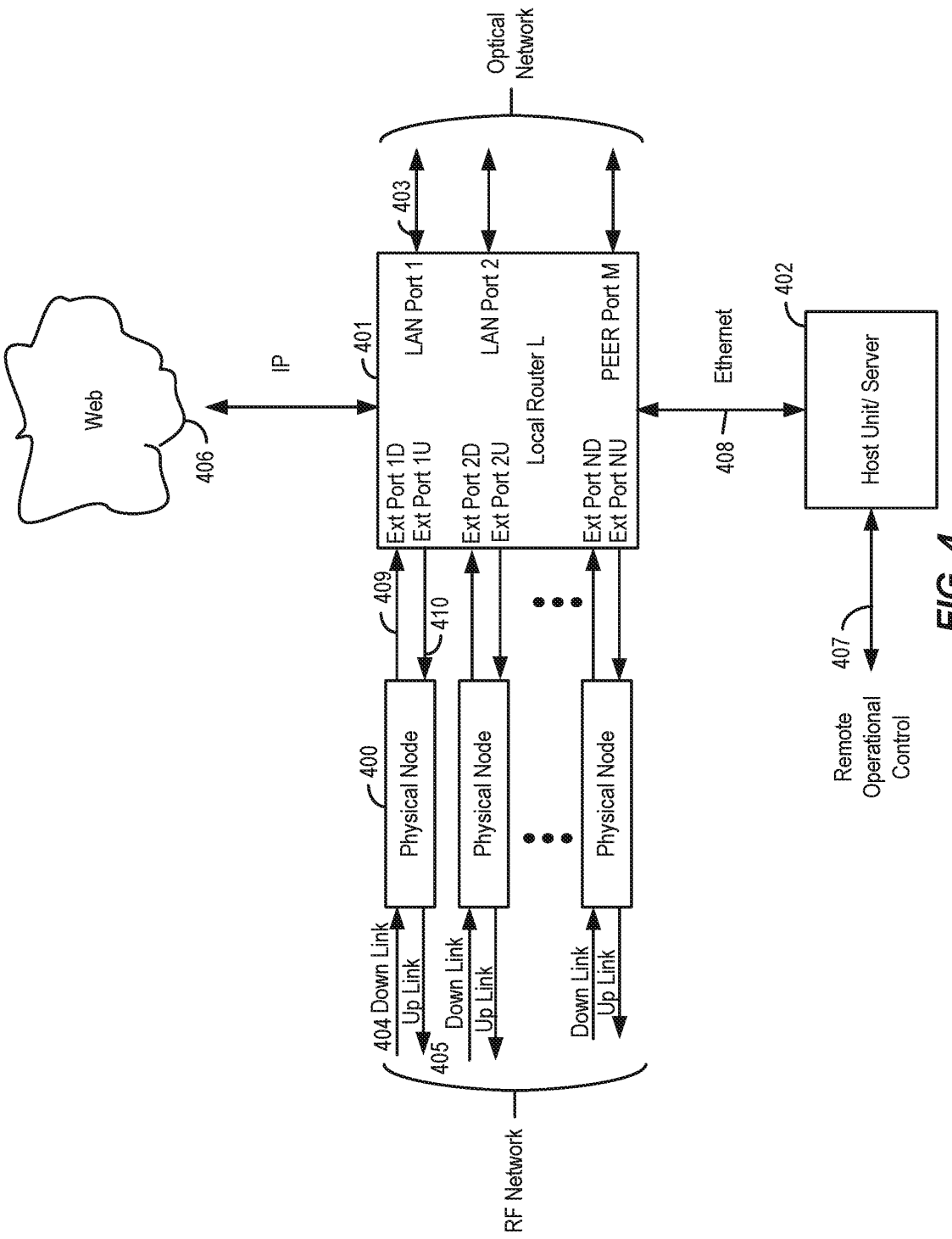
Optical Network
403
LAN Port 1
LAN Port 2
PEER Port M
401
IP
Web
406
Ethernet
402
Host Unit/ Server
Ext Port 1D
Ext Port 1U
Ext Port 2D
Ext Port 2U
Local Router L
Ext Port ND
Ext Port NU
408
409
410
400
Physical Node
Physical Node
Physical Node
404 Down Link
Up Link
405
Down Link
Up Link
Down Link
Up Link
RF Network
407
Remote Operational Control

FIG. 4

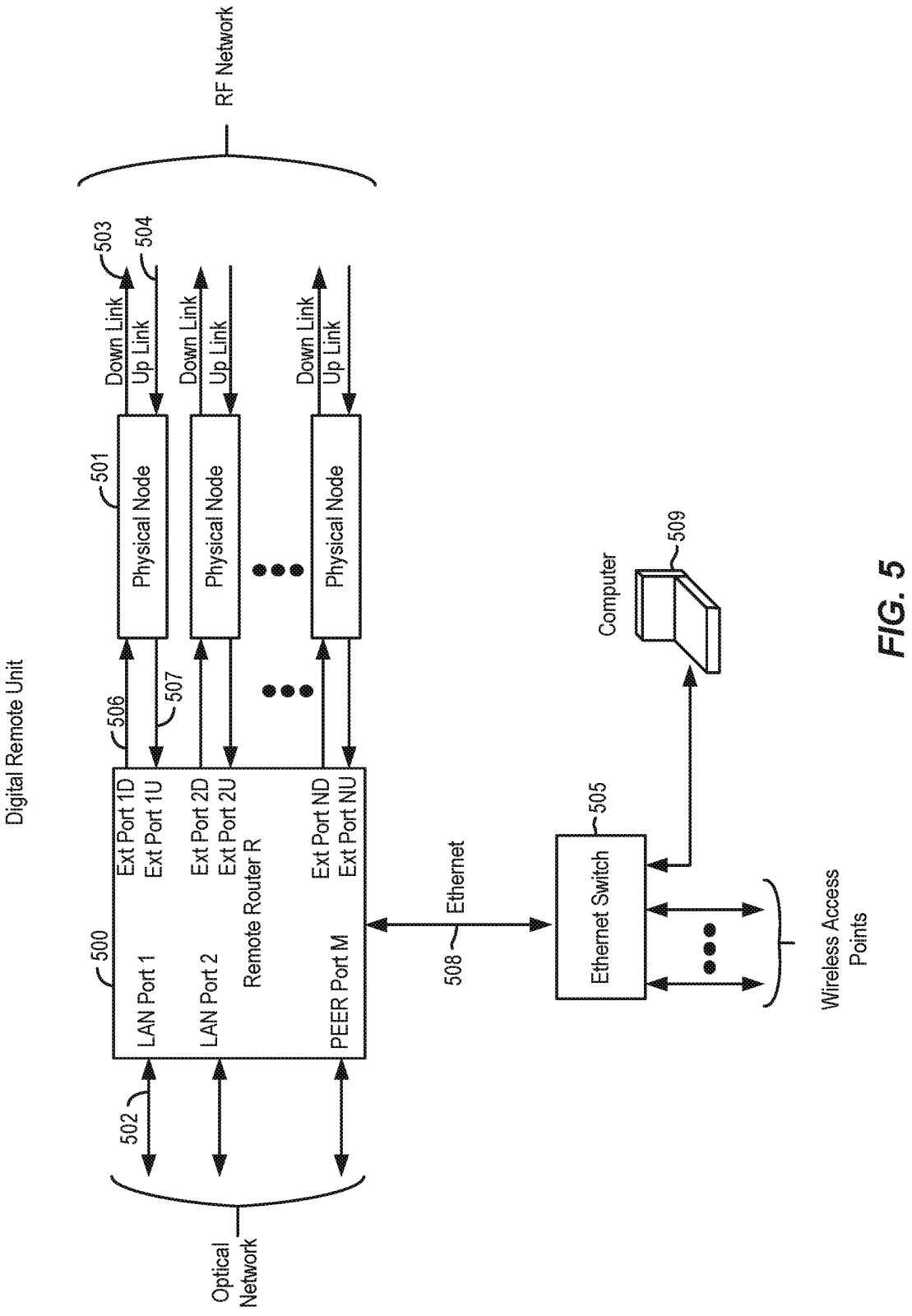
Digital Remote Unit
RF Network
Optical Network
500
LAN Port 1
LAN Port 2
PEER Port M
Remote Router R
Ext Port 1D
Ext Port 1U
Ext Port 2D
Ext Port 2U
Ext Port ND
Ext Port NU
502
506
507
501
Physical Node
Physical Node
Physical Node
Down Link
Up Link
Down Link
Up Link
Down Link
Up Link
503
504
Ethernet
508
Ethernet Switch
505
Computer
509
Wireless Access Points

FIG. 5

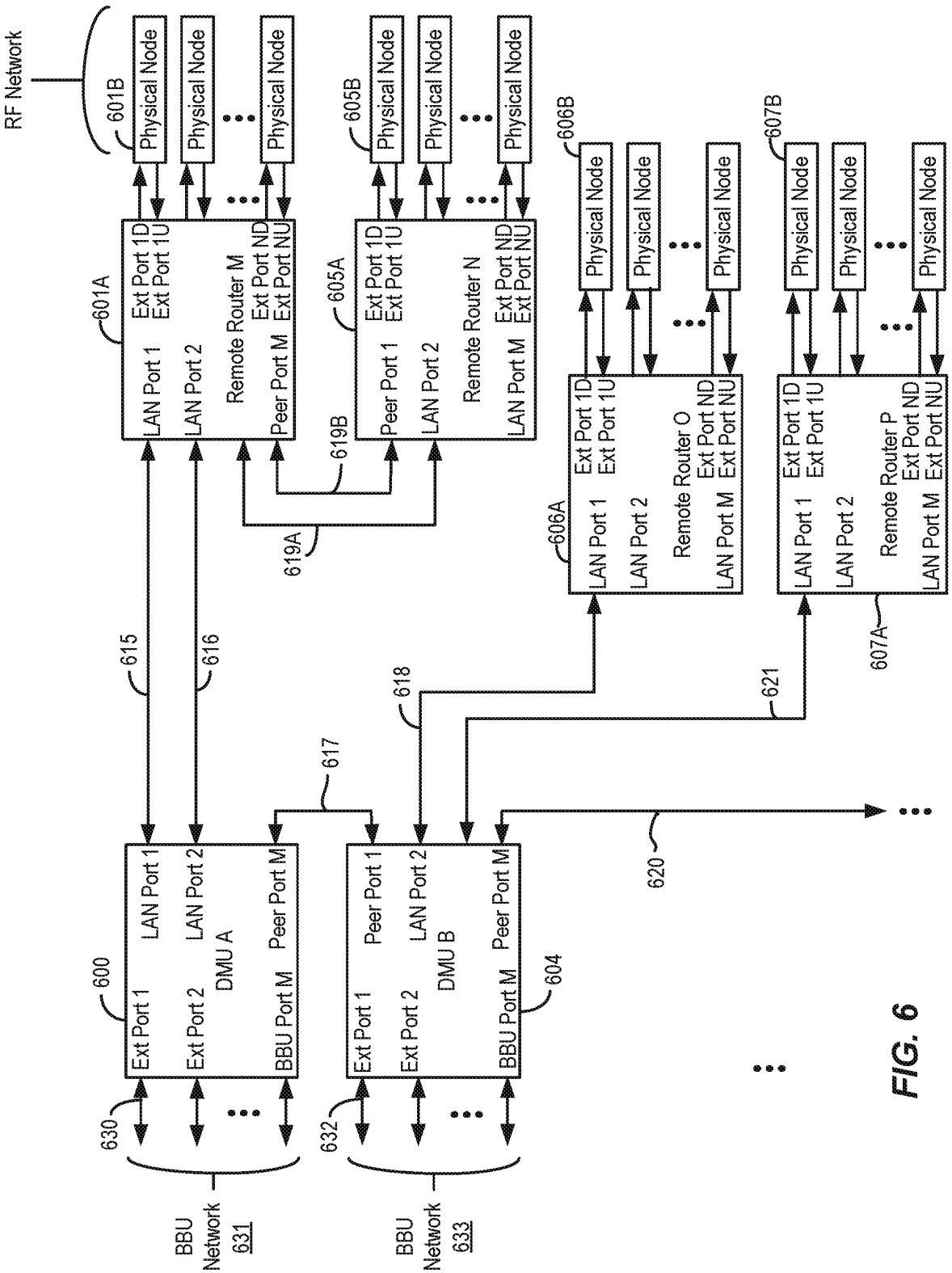
RF Network
601B
Physical Node
Physical Node
Physical Node
605B
Physical Node
Physical Node
Physical Node
606B
Physical Node
Physical Node
Physical Node
607B
Physical Node
Physical Node
Physical Node
601A
Ext Port 1D
Ext Port 1U
LAN Port 1
LAN Port 2
Remote Router M
Ext Port ND
Ext Port NU
Peer Port M
605A
Ext Port 1D
Ext Port 1U
Peer Port 1
LAN Port 2
Remote Router N
Ext Port ND
Ext Port NU
LAN Port M
606A
Ext Port 1D
Ext Port 1U
LAN Port 1
LAN Port 2
Remote Router O
Ext Port ND
Ext Port NU
LAN Port M
607A
Ext Port 1D
Ext Port 1U
LAN Port 1
LAN Port 2
Remote Router P
Ext Port ND
Ext Port NU
LAN Port M
619A
619B
615
616
617
618
620
621
600
Ext Port 1
Ext Port 2
LAN Port 1
LAN Port 2
DMU A
Peer Port M
BBU Port M
604
Ext Port 1
Ext Port 2
Peer Port 1
LAN Port 2
DMU B
Peer Port M
BBU Port M
630
632
BBU Network 631
BBU Network 633

FIG. 6

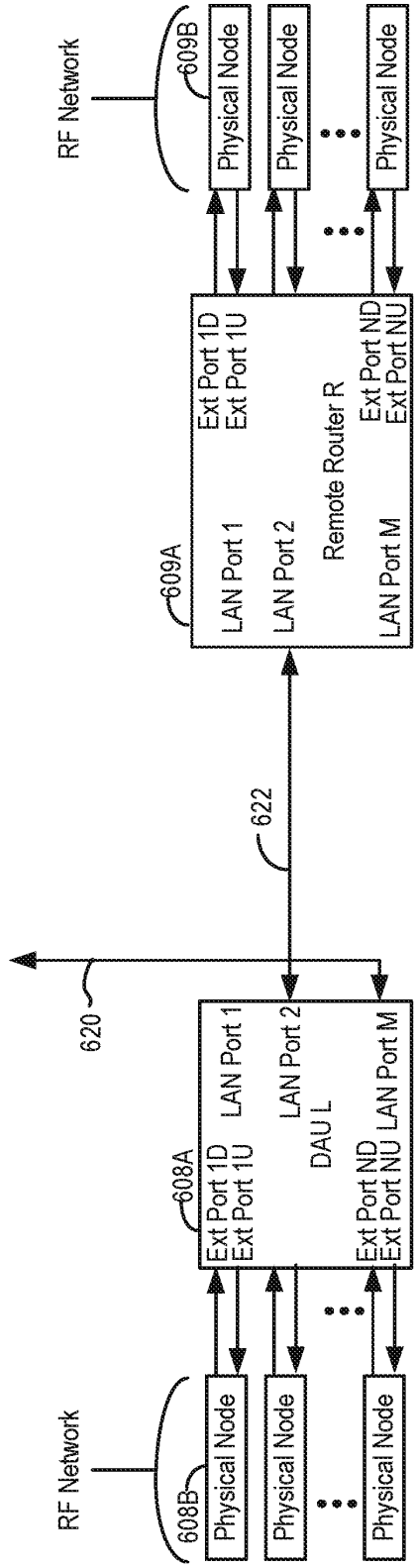

FIG. 6
(Continued)

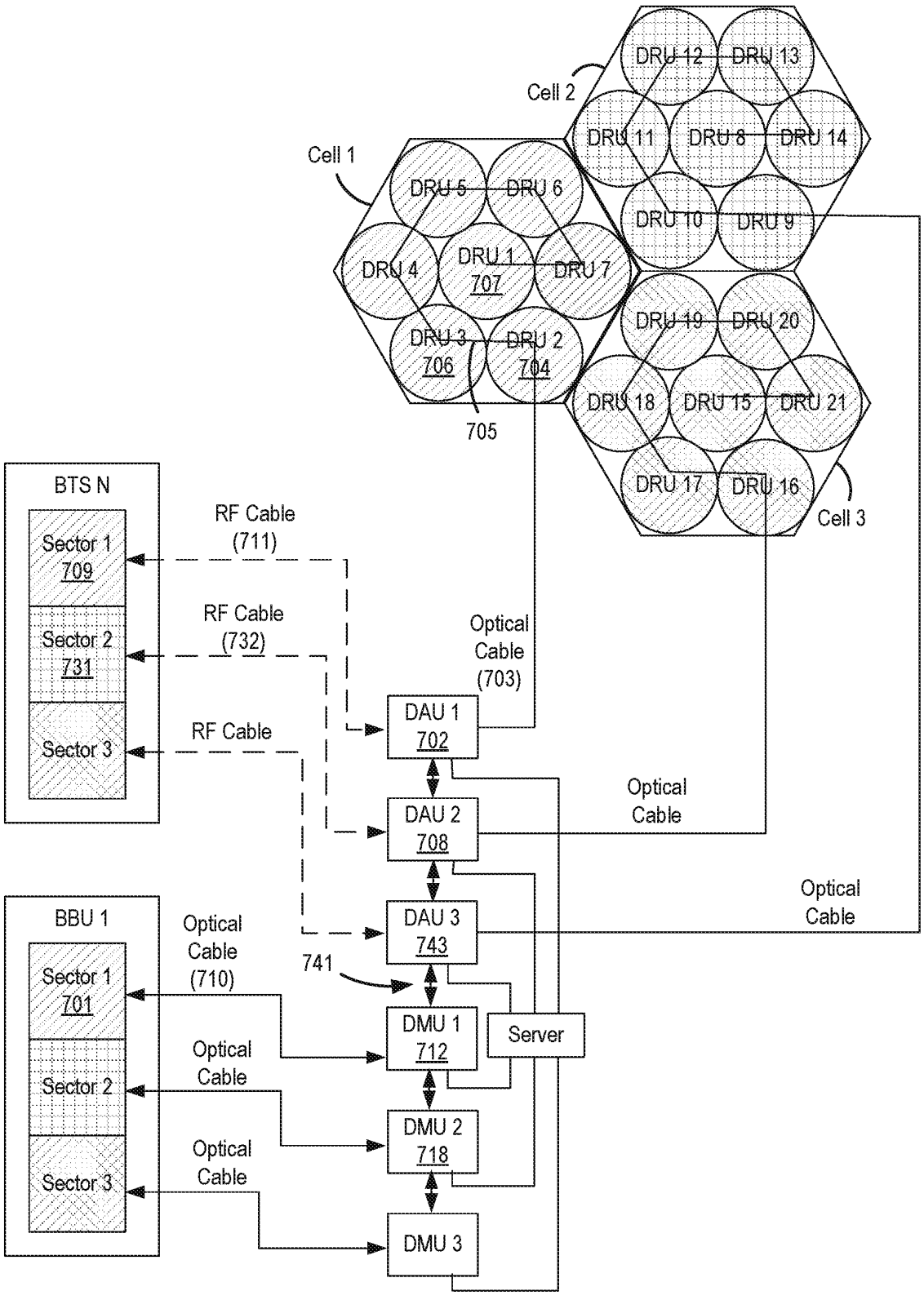
Cell 1
Cell 2
Cell 3
DRU 1
707
DRU 2
704
DRU 3
706
DRU 4
DRU 5
DRU 6
DRU 7
DRU 8
DRU 9
DRU 10
DRU 11
DRU 12
DRU 13
DRU 14
DRU 15
DRU 16
DRU 17
DRU 18
DRU 19
DRU 20
DRU 21
705
BTS N
Sector 1
709
Sector 2
731
Sector 3
RF Cable
(711)
RF Cable
(732)
RF Cable
Optical
Cable
(703)
DAU 1
702
DAU 2
708
DAU 3
743
Optical
Cable
Optical
Cable
BBU 1
Sector 1
701
Sector 2
Sector 3
Optical
Cable
(710)
741
DMU 1
712
DMU 2
718
DMU 3
Server
Optical
Cable
Optical
Cable

FIG. 7

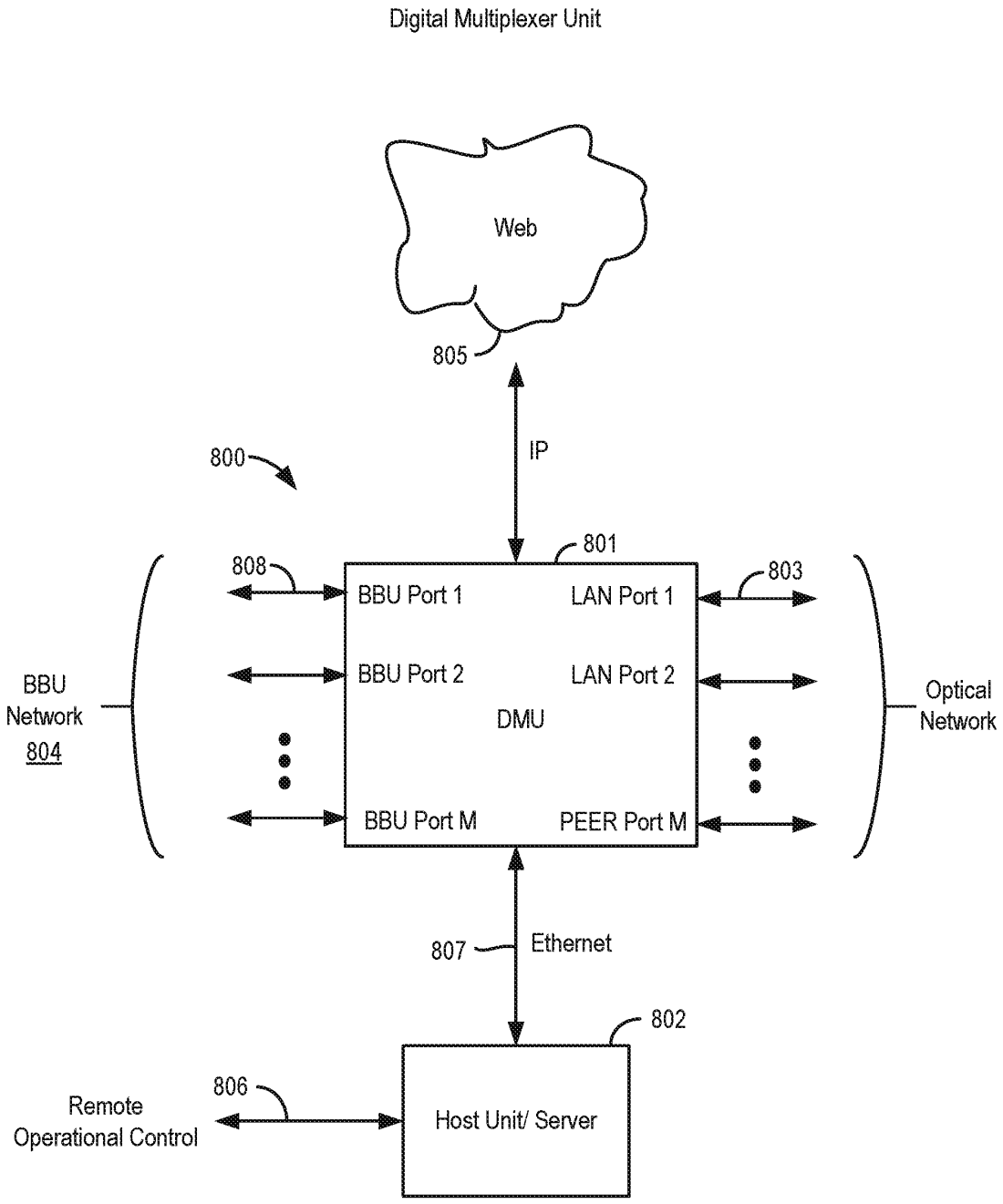
Digital Multiplexer Unit
Web
805
IP
800
801
808
803
BBU Port 1
LAN Port 1
BBU Port 2
LAN Port 2
DMU
BBU Network 804
Optical Network
BBU Port M
PEER Port M
807
Ethernet
802
806
Remote Operational Control
Host Unit/ Server

FIG. 8

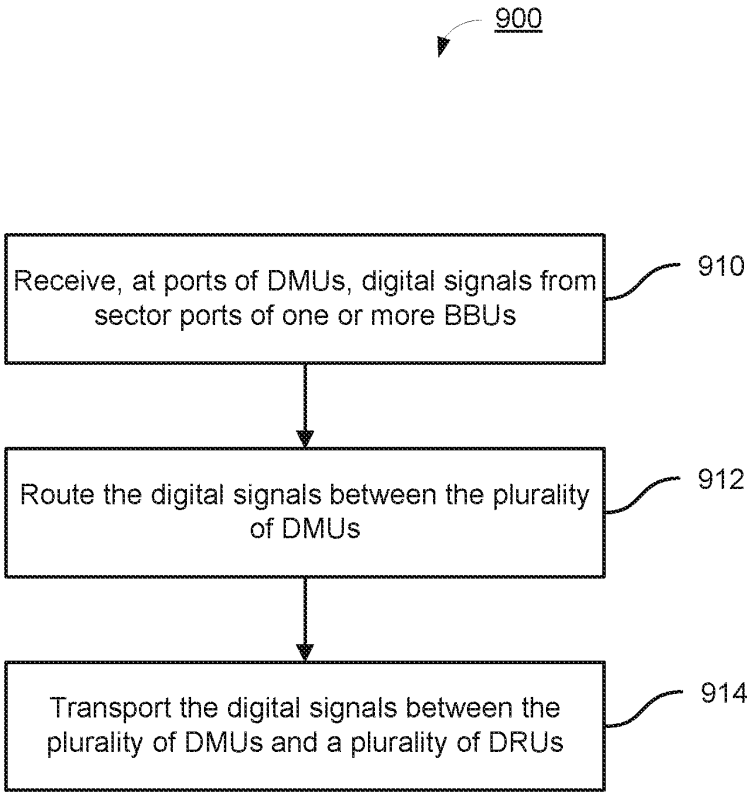
900
Receive, at ports of DMUs, digital signals from sector ports of one or more BBUs
910
Route the digital signals between the plurality of DMUs
912
Transport the digital signals between the plurality of DMUs and a plurality of DRUs
914

FIG. 9

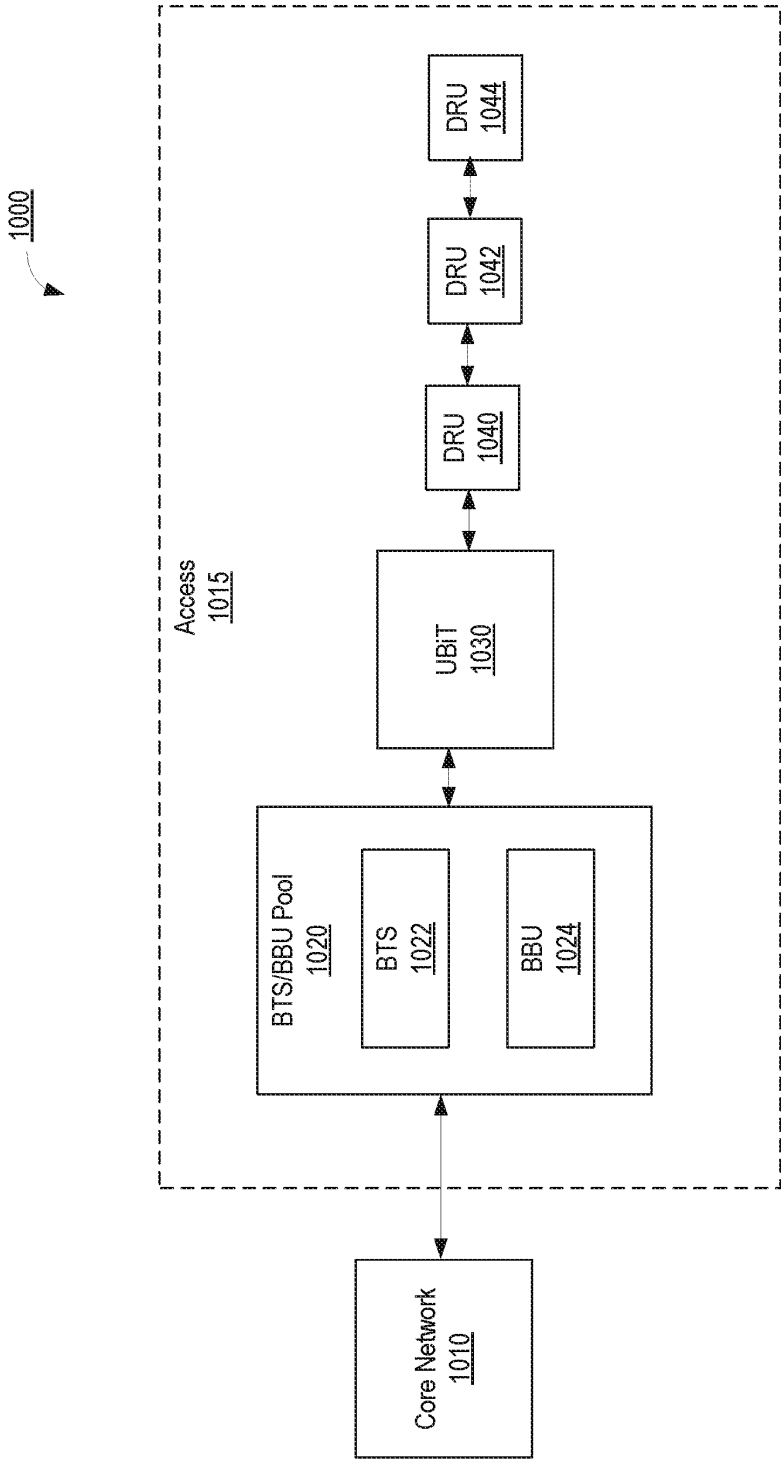
1000
Access
1015
DRU
1044
DRU
1042
DRU
1040
UBiT
1030
BTS/BBU Pool
1020
BTS
1022
BBU
1024
Core Network
1010

FIG. 10

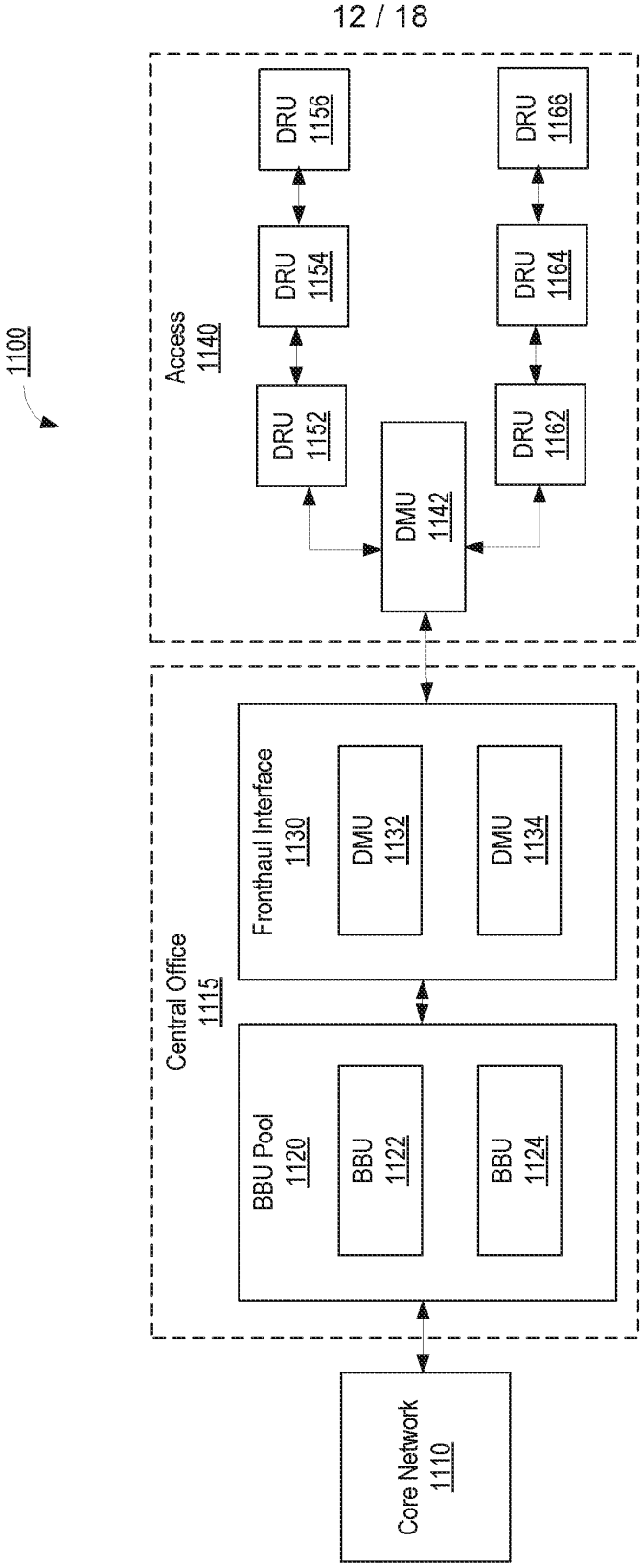
1100
Core Network
1110
Central Office
1115
BBU Pool
1120
BBU
1122
BBU
1124
Fronthaul Interface
1130
DMU
1132
DMU
1134
DMU
1142
Access
1140
DRU
1152
DRU
1154
DRU
1156
DRU
1162
DRU
1164
DRU
1166

FIG. 11

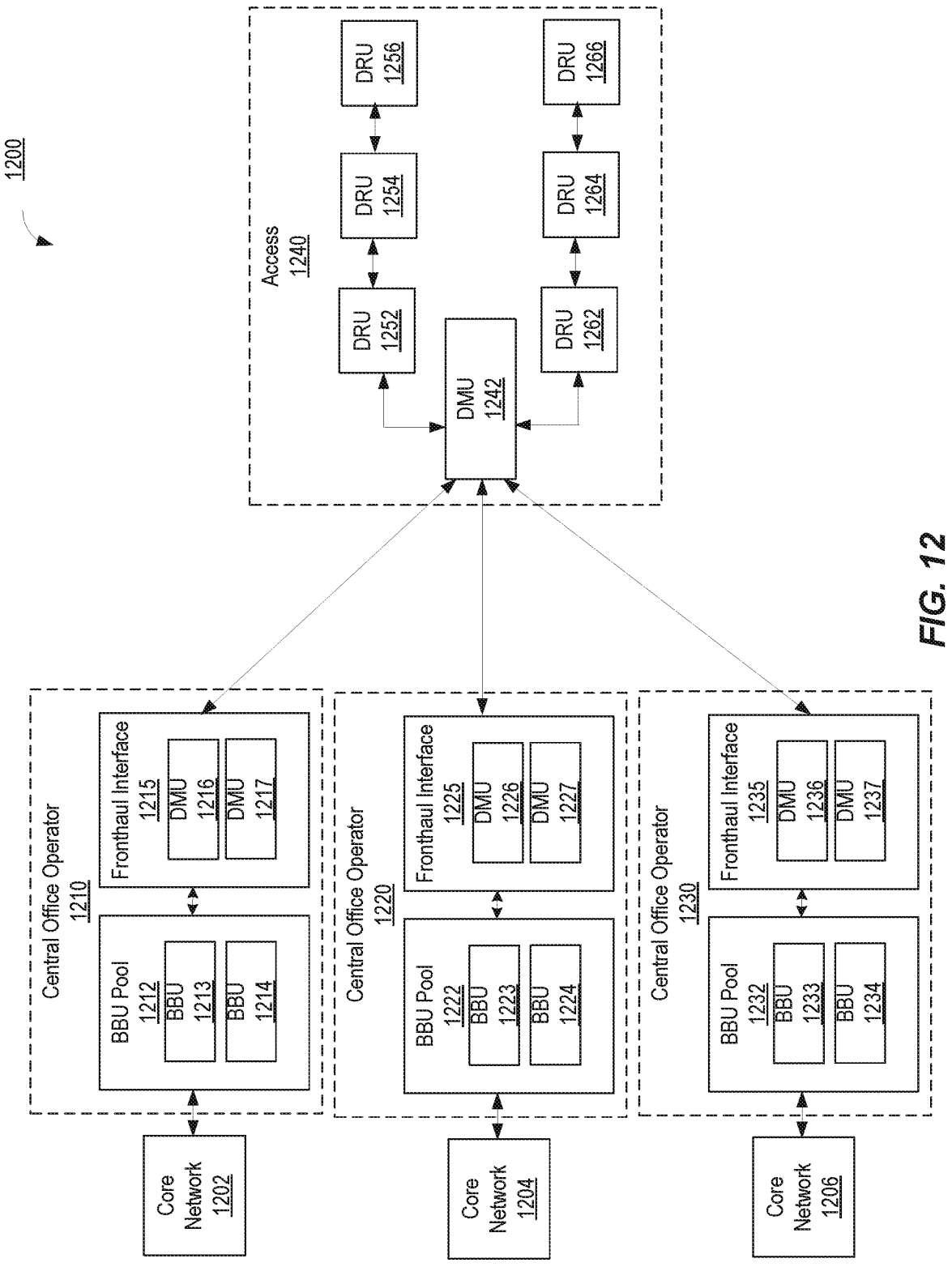
1200
Access
1240
DRU
1252
DRU
1254
DRU
1256
DRU
1262
DRU
1264
DRU
1266
DMU
1242
Central Office Operator
1210
Fronthaul Interface
1215
DMU
1216
DMU
1217
BBU Pool
1212
BBU
1213
BBU
1214
Central Office Operator
1220
Fronthaul Interface
1225
DMU
1226
DMU
1227
BBU Pool
1222
BBU
1223
BBU
1224
Central Office Operator
1230
Fronthaul Interface
1235
DMU
1236
DMU
1237
BBU Pool
1232
BBU
1233
BBU
1234
Core
Network
1202
Core
Network
1204
Core
Network
1206

FIG. 12

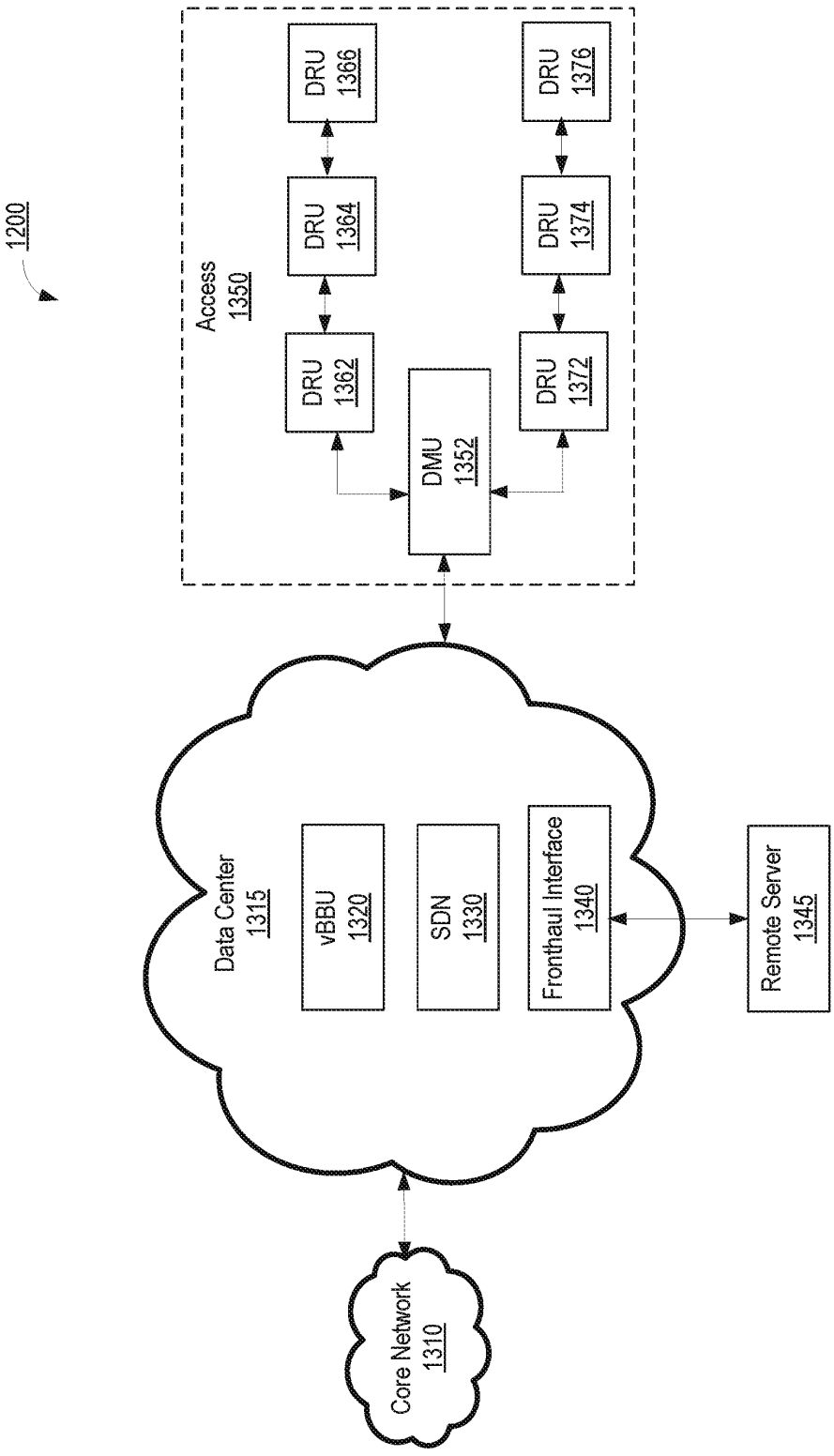
1200
Access
1350
DRU
1362
DRU
1364
DRU
1366
DRU
1372
DRU
1374
DRU
1376
DMU
1352
Data Center
1315
vBBU
1320
SDN
1330
Fronthaul Interface
1340
Remote Server
1345
Core Network
1310

FIG. 13

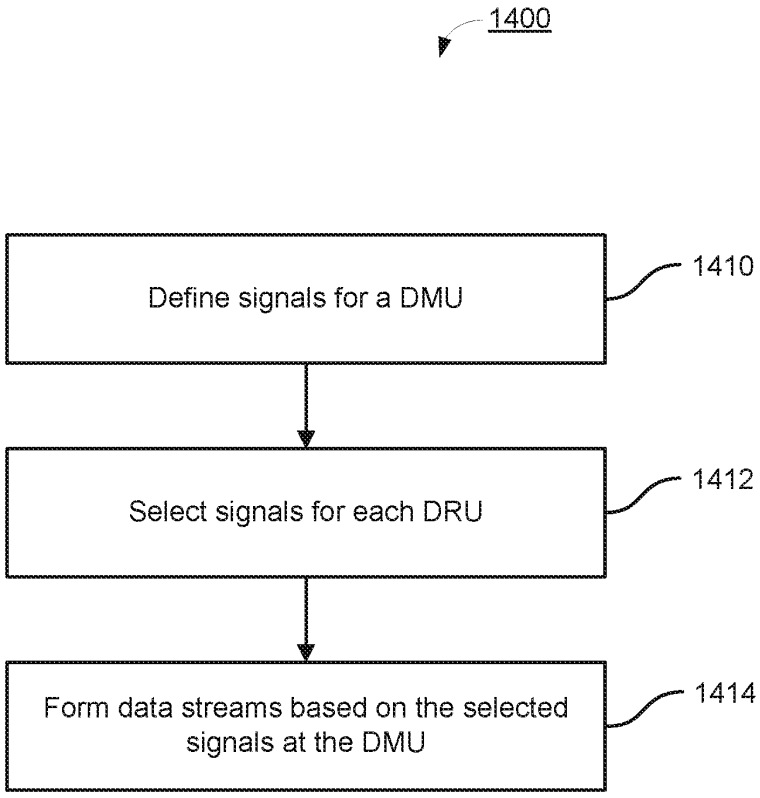
1400
Define signals for a DMU
1410
Select signals for each DRU
1412
Form data streams based on the selected signals at the DMU
1414

FIG. 14

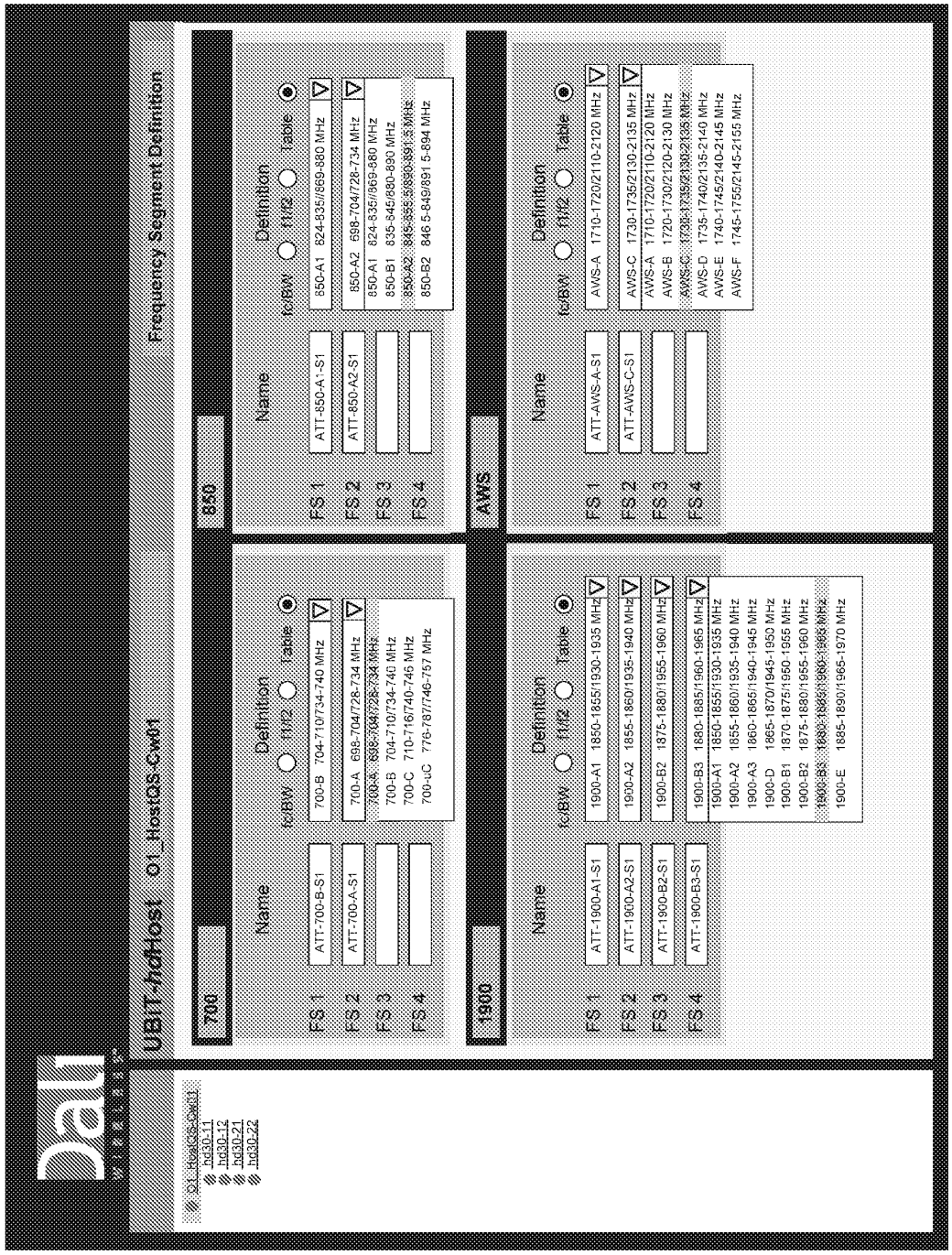
1500
Frequency Segment Definition
UBIT-hdHost O1_HostQS-Cw01
O1_HostQS-Cw01
hd30-11
hd30-12
hd30-21
hd30-22
700
850
1900
AWS
Name
Definition
fc/BW
f1/f2
Table
FS 1
FS 2
FS 3
FS 4
ATT-700-B-S1
ATT-700-A-S1
ATT-850-A1-S1
ATT-850-A2-S1
ATT-1900-A1-S1
ATT-1900-A2-S1
ATT-1900-B2-S1
ATT-1900-B3-S1
ATT-AWS-A-S1
ATT-AWS-C-S1
700-B 704-710/734-740 MHz
700-A 698-704/728-734 MHz
700-B 704-710/734-740 MHz
700-C 710-716/740-746 MHz
700-uC 776-787/746-757 MHz
850-A1 824-835/869-880 MHz
850-A2 698-704/728-734 MHz
850-A1 824-835/869-880 MHz
850-B1 835-845/880-890 MHz
850-B2 846.5-849/891.5-894 MHz
1900-A1 1850-1855/1930-1935 MHz
1900-A2 1855-1860/1935-1940 MHz
1900-B2 1875-1880/1955-1960 MHz
1900-B3 1880-1885/1960-1965 MHz
1900-A1 1850-1855/1930-1935 MHz
1900-A2 1855-1860/1935-1940 MHz
1900-A3 1860-1865/1940-1945 MHz
1900-D 1865-1870/1945-1950 MHz
1900 B1 1870 1875/1950 1955 MHz
1900-B2 1875-1880/1955-1960 MHz
1900-B3 1880-1885/1960-1965 MHz
1900-E 1885-1890/1965-1970 MHz
AWS-A 1710-1720/2110-2120 MHz
AWS-C 1730-1735/2130-2135 MHz
AWS-A 1710-1720/2110-2120 MHz
AWS-B 1720-1730/2120-2130 MHz
AWS-C 1730-1735/2130-2135 MHz
AWS-D 1735-1740/2135-2140 MHz
AWS-E 1740-1745/2140-2145 MHz
AWS-F 1745-1755/2145-2155 MHz

FIG. 15

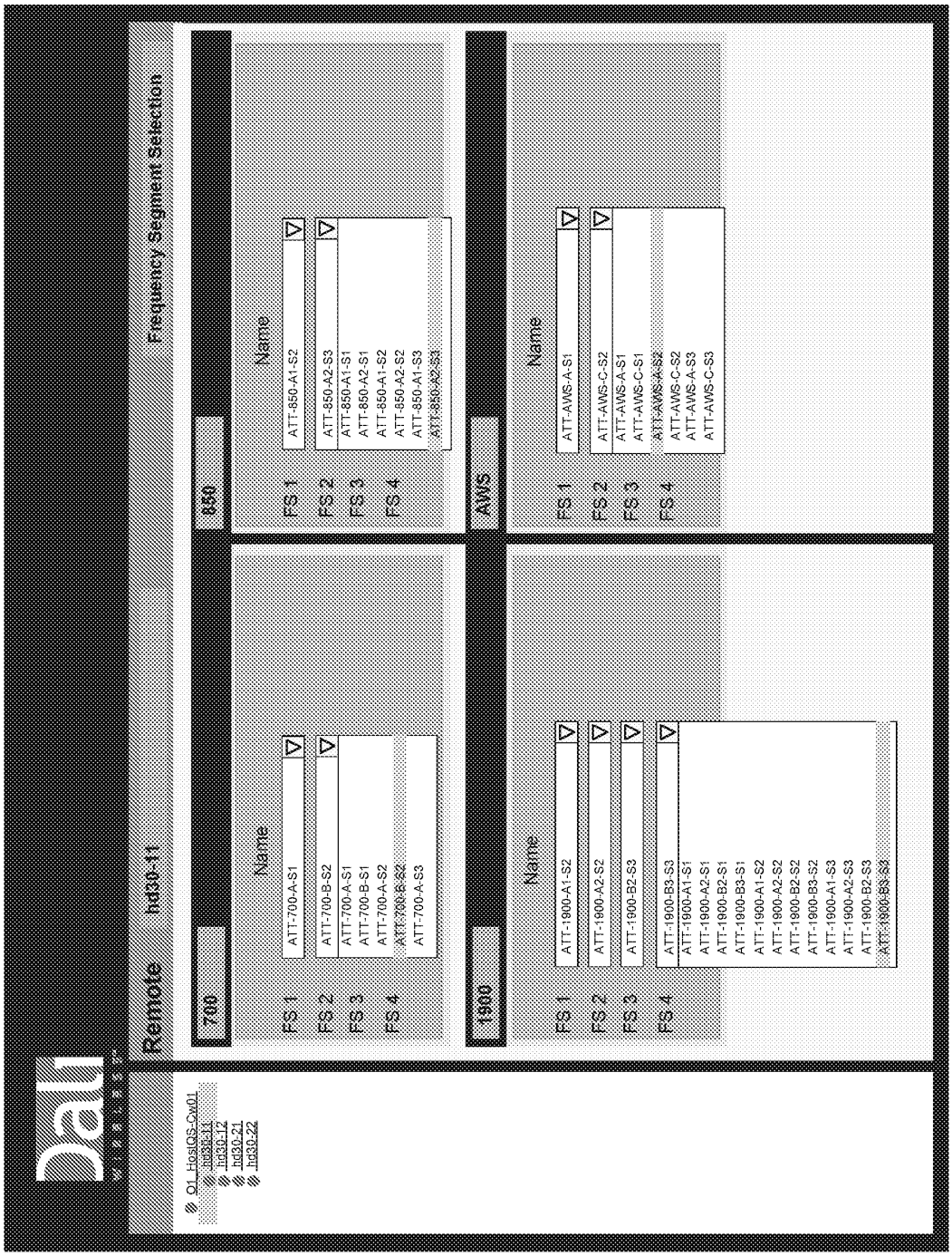
1600
Frequency Segment Selection
Remote
hd30-11
Q1_HostQS-Cw01
hd30-11
hd30-12
hd30-21
hd30-22
700
Name
FS 1
ATT-700-A-S1
FS 2
ATT-700-B-S2
FS 3
ATT-700-A-S1
ATT-700-B-S1
FS 4
ATT-700-A-S2
ATT-700-B-S2
ATT-700-A-S3
850
Name
FS 1
ATT-850-A1-S2
FS 2
ATT-850-A2-S3
FS 3
ATT-850-A1-S1
ATT-850-A2-S1
FS 4
ATT-850-A1-S2
ATT-850-A2-S2
ATT-850-A1-S3
ATT-850-A2-S3
1900
Name
FS 1
ATT-1900-A1-S2
FS 2
ATT-1900-A2-S2
FS 3
ATT-1900-B2-S3
FS 4
ATT-1900-B3-S3
ATT-1900-A1-S1
ATT-1900-A2-S1
ATT-1900-B2-S1
ATT-1900-B3-S1
ATT-1900-A1-S2
ATT-1900-A2-S2
ATT-1900-B2-S2
ATT-1900-B3-S2
ATT-1900-A1-S3
ATT-1900-A2-S3
ATT-1900-B2-S3
ATT-1900-B3-S3
AWS
Name
FS 1
ATT-AWS-A-S1
FS 2
ATT-AWS-C-S2
FS 3
ATT-AWS-A-S1
ATT-AWS-C-S1
FS 4
ATT-AWS-A-S2
ATT-AWS-C-S2
ATT-AWS-A-S3
ATT-AWS-C-S3

FIG. 16

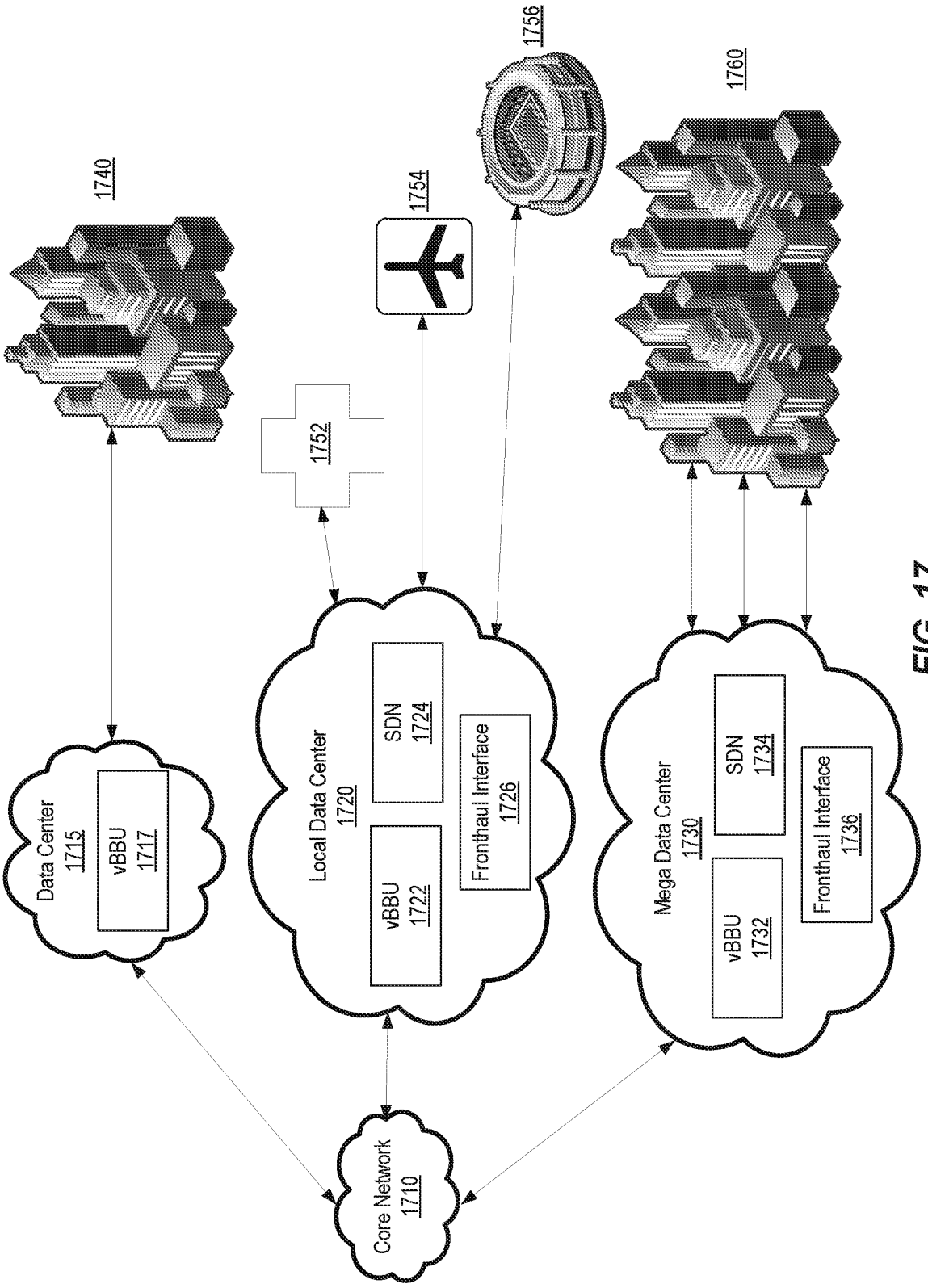
1740
1754
1756
1760
1752
Data Center
1715
vBBU
1717
Local Data Center
1720
vBBU
1722
SDN
1724
Fronthaul Interface
1726
Mega Data Center
1730
vBBU
1732
SDN
1734
Fronthaul Interface
1736
Core Network
1710

FIG. 17