FIG. 13

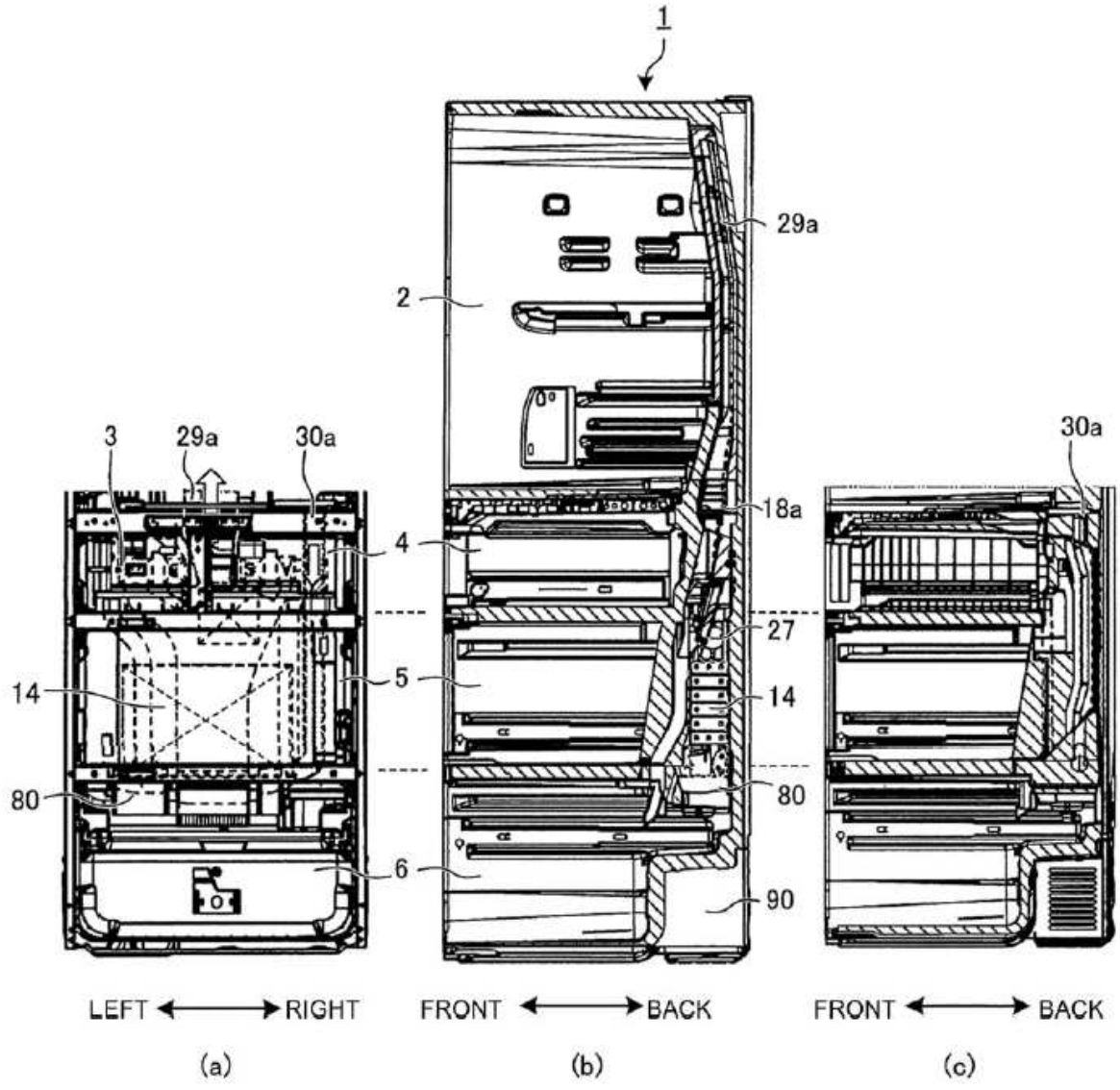
1
29a
2
3
29a
30a
30a
18a
4
27
14
5
14
80
80
6
90
LEFT
RIGHT
FRONT
BACK
FRONT
BACK
(a)
(b)
(c)