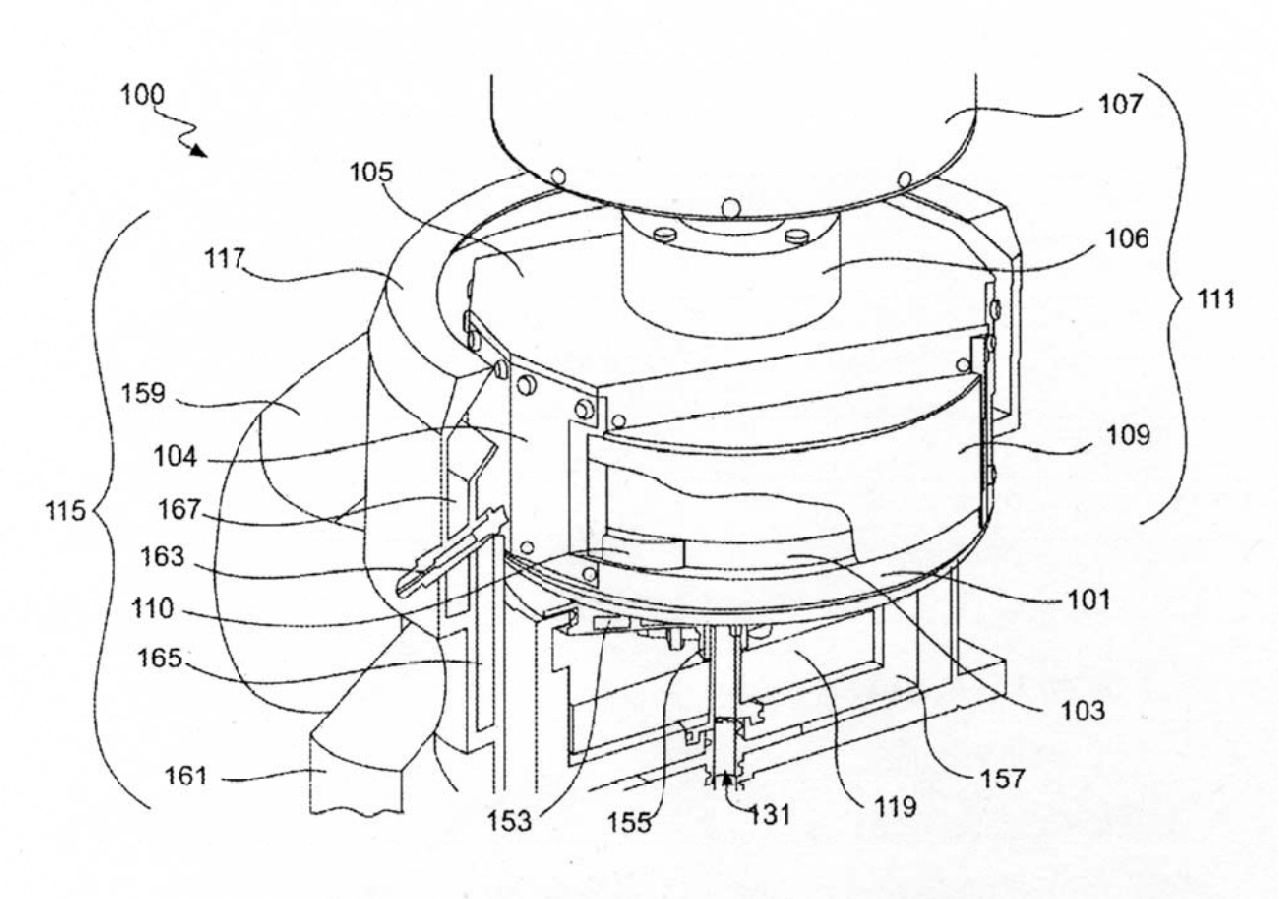
100
107
105
106
117
111
159
109
104
115
167
163
101
110
165
103
161
157
153
155
131
119

FIG. 1

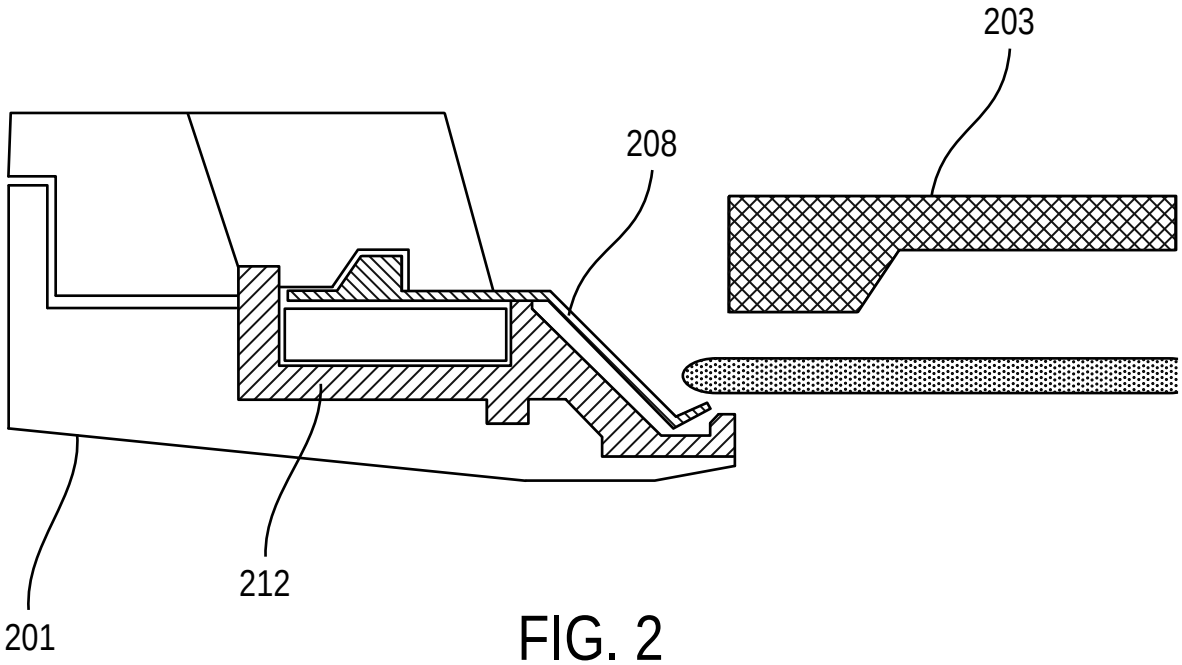
203
208
212
201

FIG. 2

FIG. 3

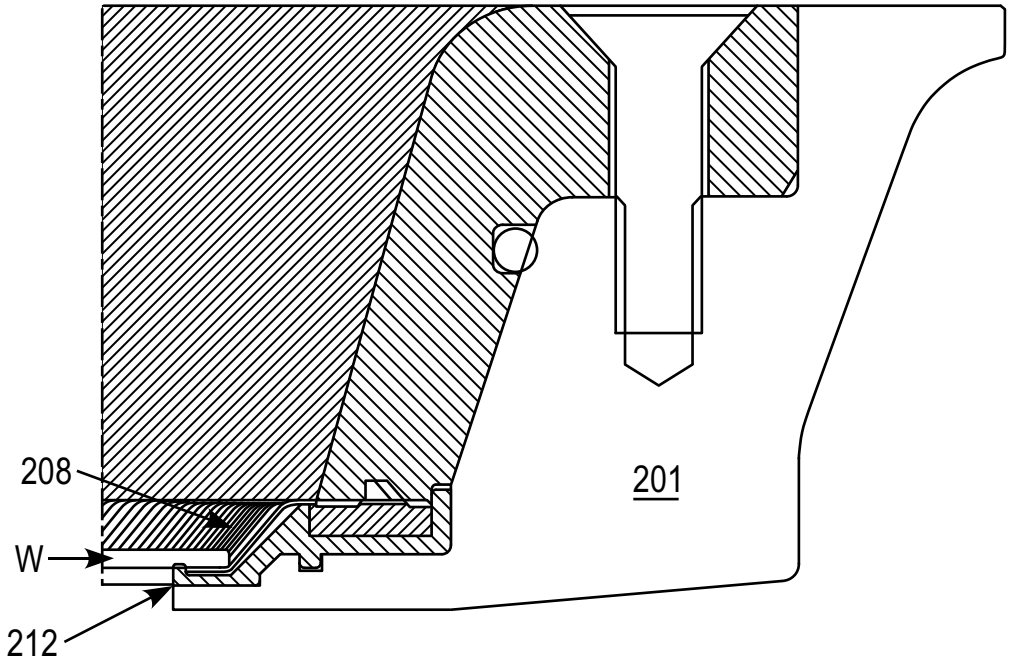

FIG. 4

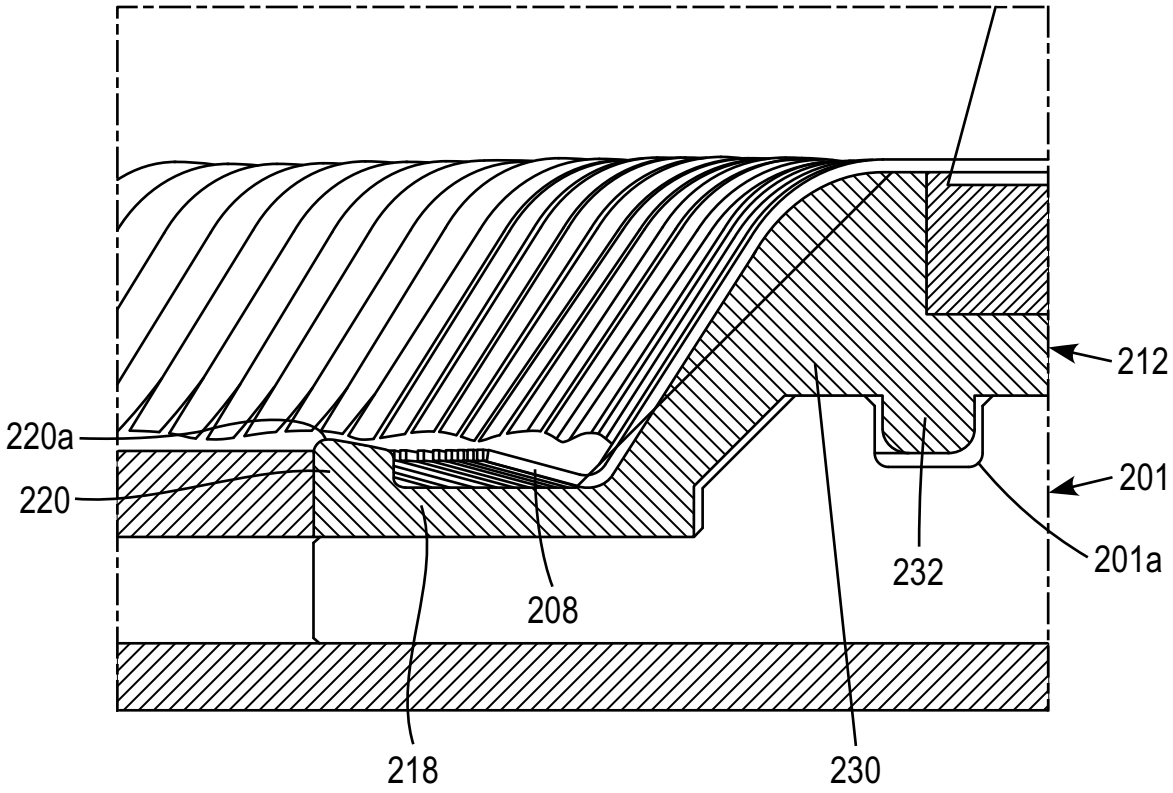

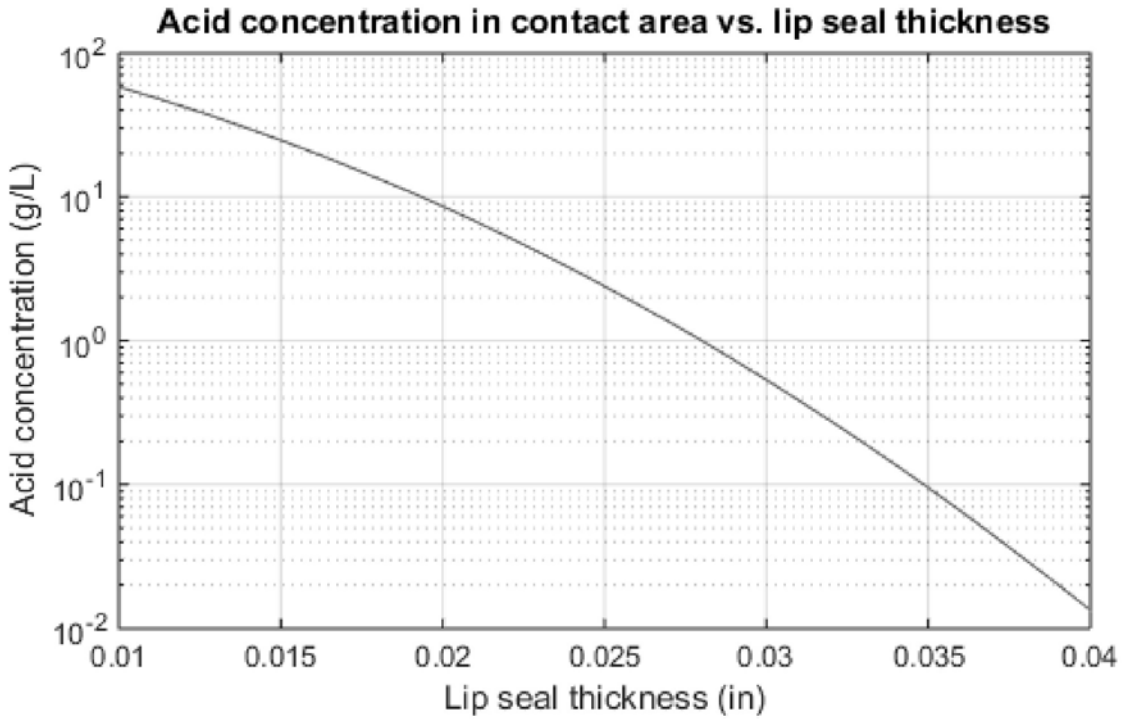
Acid concentration in contact area vs. lip seal thickness
Acid concentration (g/L)
10^2
10^1
10^0
10^{-1}
10^{-2}
0.01
0.015
0.02
0.025
0.03
0.035
0.04
Lip seal thickness (in)

FIG. 5



FIG. 6a

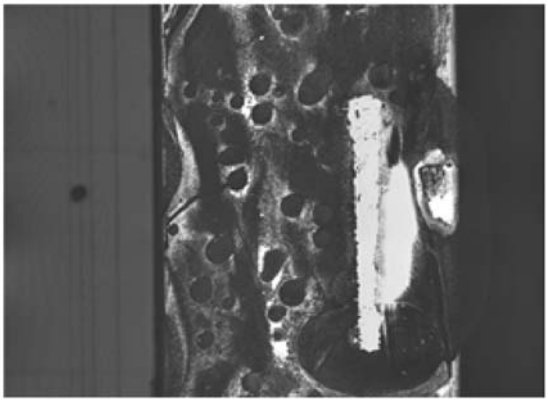

FIG. 6b

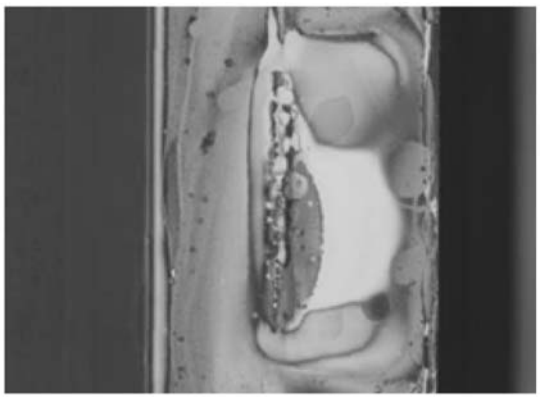

FIG. 6c