(12) INTERNATIONAL APPLICATION PUBLISHED UNDER THE PATENT COOPERATION TREATY (PCT)

(19) World Intellectual Property Organization
International Bureau

(43) International Publication Date
24 August 2006 (24.08.2006)

PCT

(10) International Publication Number
WO 2006/088427 A1

(51) International Patent Classification:
B81B 1/00 (2006.01) *B01L 3/00* (2006.01)

(21) International Application Number:
PCT/SG2005/000038

(22) International Filing Date:
15 February 2005 (15.02.2005)

(25) Filing Language: English

(26) Publication Language: English

(71) Applicants *(for all designated States except US)*: **AGENCY FOR SCIENCE, TECHNOLOGY AND RESEARCH** [SG/SG]; 20 Biopolis Way, #07-01, Centros, Singapore 138668 (SG). **NATIONAL UNIVERSITY OF SINGAPORE** [SG/SG]; 10 Kent Ridge Crescent, Singapore 119260 (SG).

(72) Inventors; and
(75) Inventors/Applicants *(for US only)*: **CHONG, Ser, Choong** [SG/SG]; Blk 290A Bukit Batok Street 24, #10-85, Singapore 652290 (SG). **XIE, Ling** [CN/SG]; Blk 709 Clementi West Street 2, #04-287, Singapore 120709 (SG). **JI, Hongmiao** [CN/SG]; Blk 291B Bukit Batok St. 24, #10-39, Singapore 651291 (SG). **LI, Jing** [CN/SG]; Blk 110 Jurong East Street 13, #06-310, Singapore 600110 (SG). **CHEN, Yu** [CN/SG]; Blk 144 Upper Bukit Timah Road, #16-01, Singapore 588177 (SG). **YOBAS, Levent** [TR/SG]; 42 South Buona Vista Road, #01-14 Bayville Condominium, Singapore 118166 (SG).

(74) Agent: **VIERING, JENTSCHURA & PARTNER**; P.O. Box 1088, Rochor Post Office, Rochor Road, Singapore 911833 (SG).

(81) Designated States *(unless otherwise indicated, for every kind of national protection available)*: AE, AG, AL, AM, AT, AU, AZ, BA, BB, BG, BR, BW, BY, BZ, CA, CH, CN, CO, CR, CU, CZ, DE, DK, DM, DZ, EC, EE, EG, ES, FI, GB, GD, GE, GH, GM, HR, HU, ID, IL, IN, IS, JP, KE, KG, KP, KR, KZ, LC, LK, LR, LS, LT, LU, LV, MA, MD, MG, MK, MN, MW, MX, MZ, NA, NI, NO, NZ, OM, PG,

[Continued on next page]

(54) Title: MICROFLUIDICS PACKAGE AND METHOD OF FABRICATING THE SAME

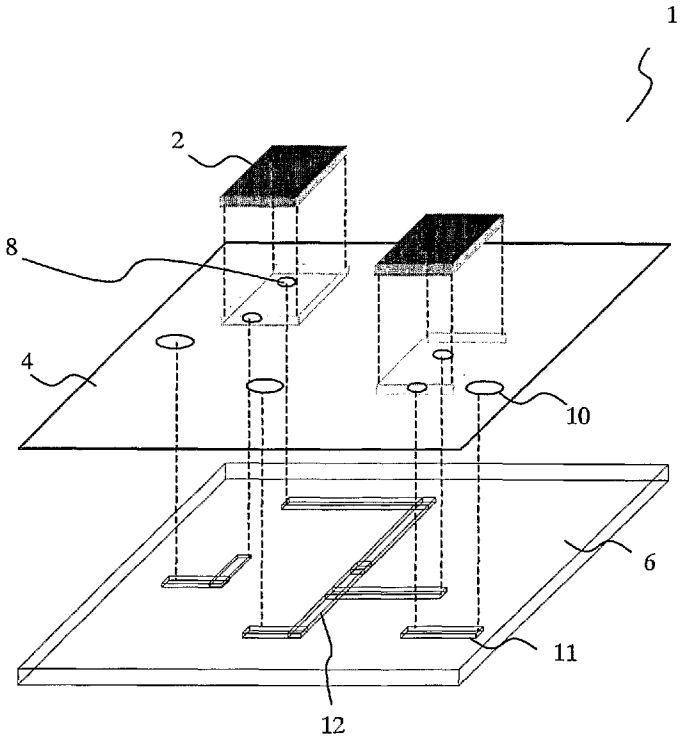

(57) Abstract: A microfluidics package (1) comprising a substrate (6) having a top surface, said top surface comprises at least one fluid channel (11, 12), at least one fluidic chip (2) having a top surface, a bottom surface, at least one side surface, and at least one passage to allow a fluid to traverse from the top surface or any side surface to the bottom surface of the chip; and a sheet (4) of which both sides are adhesive, wherein the first adhesive side of the sheet (4) is secured to the substrate (6), and the at least one fluidic chip (2) is secured by the second adhesive side of the sheet (4), said fluidic chip (2) being arranged such that the at least one passage of the fluidic chip is in fluid communication with the at least one fluid channel (11, 12) of the substrate.

WO 2006/088427 A1

PH, PL, PT, RO, RU, SC, SD, SE, SG, SK, SL, SM, SY, TJ, TM, TN, TR, TT, TZ, UA, UG, US, UZ, VC, VN, YU, ZA, ZM, ZW.

(84) **Designated States** *(unless otherwise indicated, for every kind of regional protection available)*: ARIPO (BW, GH, GM, KE, LS, MW, MZ, NA, SD, SL, SZ, TZ, UG, ZM, ZW), Eurasian (AM, AZ, BY, KG, KZ, MD, RU, TJ, TM), European (AT, BE, BG, CH, CY, CZ, DE, DK, EE, ES, FI, FR, GB, GR, HU, IE, IS, IT, LT, LU, MC, NL, PL, PT, RO, SE, SI, SK, TR), OAPI (BF, BJ, CF, CG, CI, CM, GA, GN, GQ, GW, ML, MR, NE, SN, TD, TG).

Published:
— *with international search report*

For two-letter codes and other abbreviations, refer to the "Guidance Notes on Codes and Abbreviations" appearing at the beginning of each regular issue of the PCT Gazette.