(12) INTERNATIONAL APPLICATION PUBLISHED UNDER THE PATENT COOPERATION TREATY (PCT)

(19) World Intellectual Property Organization
International Bureau

(43) International Publication Date
5 December 2002 (05.12.2002)

PCT

(10) International Publication Number
WO 02/096748 A1

(51) International Patent Classification[7]: B63B 59/08

(21) International Application Number: PCT/BE02/00074

(22) International Filing Date: 14 May 2002 (14.05.2002)

(25) Filing Language: English

(26) Publication Language: English

(30) Priority Data:
2001/0368 30 May 2001 (30.05.2001) BE

(71) Applicant and
(72) Inventor: VAN ROMPAY, Boudewijn, Gabriël [BE/US]; 307 Spottis Woode Ct, Clearwater, FL 33756 (US).

(74) Agent: DONNÉ, E.; Bureau M.F.J. Bockstael NV, Arenbergstraat 13, B-2000 Antwerpen (BE).

(81) Designated States (national): AE, AG, AL, AM, AT, AU, AZ, BA, BB, BG, BR, BY, BZ, CA, CH, CN, CO, CR, CU, CZ, DE, DK, DM, DZ, EC, EE, ES, FI, GB, GD, GE, GH, GM, HR, HU, ID, IL, IN, IS, JP, KE, KG, KP, KR, KZ, LC, LK, LR, LS, LT, LU, LV, MA, MD, MG, MK, MN, MW, MX, MZ, NO, NZ, OM, PH, PL, PT, RO, RU, SD, SE, SG, SI, SK, SL, TJ, TM, TN, TR, TT, TZ, UA, UG, US, UZ, VN, YU, ZA, ZM, ZW.

(84) Designated States (regional): ARIPO patent (GH, GM, KE, LS, MW, MZ, SD, SL, SZ, TZ, UG, ZM, ZW), Eurasian patent (AM, AZ, BY, KG, KZ, MD, RU, TJ, TM), European patent (AT, BE, CH, CY, DE, DK, ES, FI, FR, GB, GR, IE, IT, LU, MC, NL, PT, SE, TR), OAPI patent (BF, BJ, CF, CG, CI, CM, GA, GN, GQ, GW, ML, MR, NE, SN, TD, TG).

Declaration under Rule 4.17:
— *of inventorship (Rule 4.17(iv)) for US only*

Published:
— *with international search report*

For two-letter codes and other abbreviations, refer to the "Guidance Notes on Codes and Abbreviations" appearing at the beginning of each regular issue of the PCT Gazette.

(54) Title: DEVICE FOR REMOVING THE GROWTH ON A SHIP'S HULL

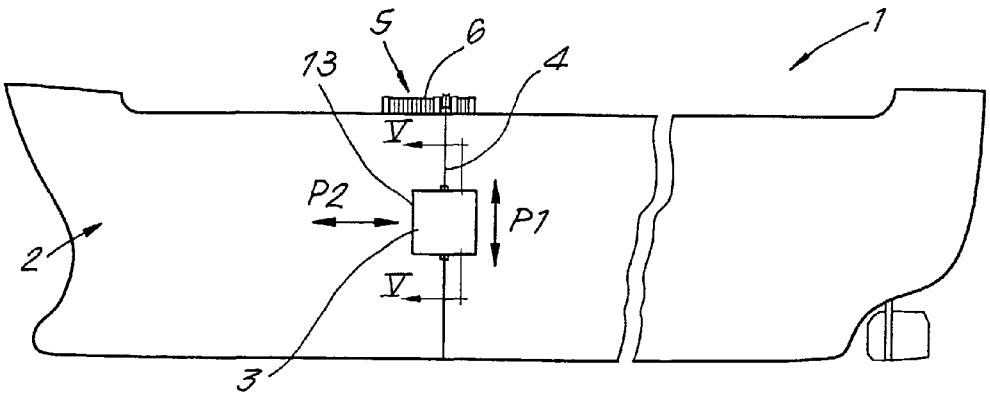

(57) Abstract: The invention relates to a device for removing the growth on a ship's hull (2). This device comprises a cleaning element (3) and means for displacing this cleaning element over the hull (2), which means comprise at least one cable (4) which is arranged such that it passes underneath the keel of the hull (2) and to which the cleaning element (3) and means (5) for moving the cable (4) are connected. The cleaning element comprises at least one mat (3) comprising a flat base (13) consisting of an elastically deformable material, which at least at one side, is provided with a relief (14) of wear-and-tear-resistant, elastically deformable material. In the mat (3) at least one magnet (17) is provided.

WO 02/096748 A1