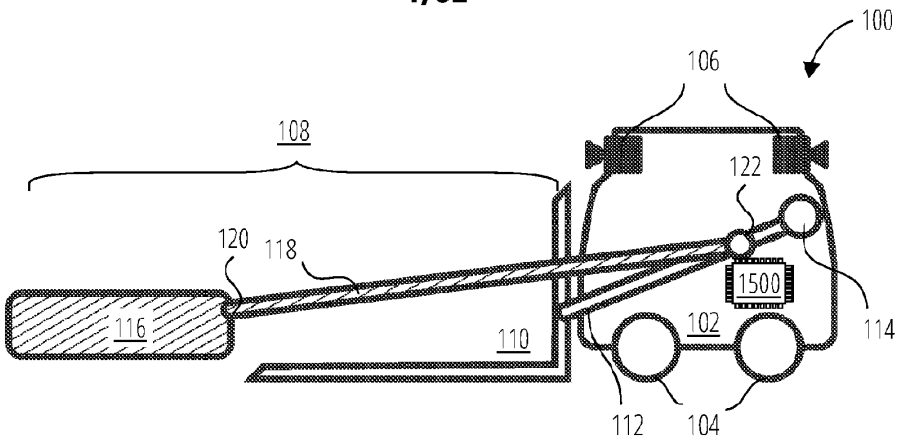
100
106
108
122
120
118
1500
116
110
102
114
112
104

FIG. 1A

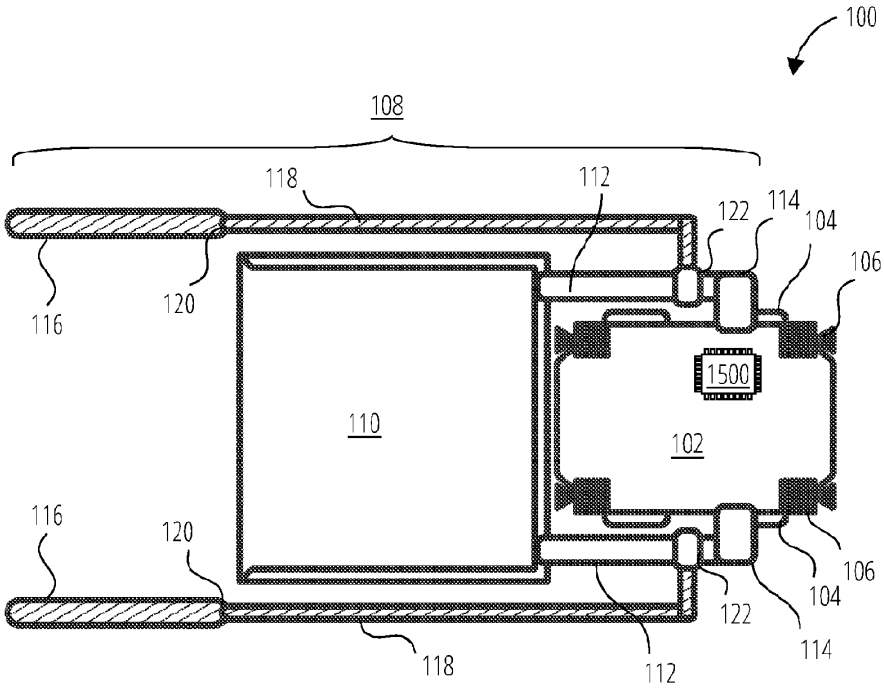
100
108
118
112
122
114
104
106
116
120
1500
110
102
116
120
106
104
122
114
118
112

FIG. 1B

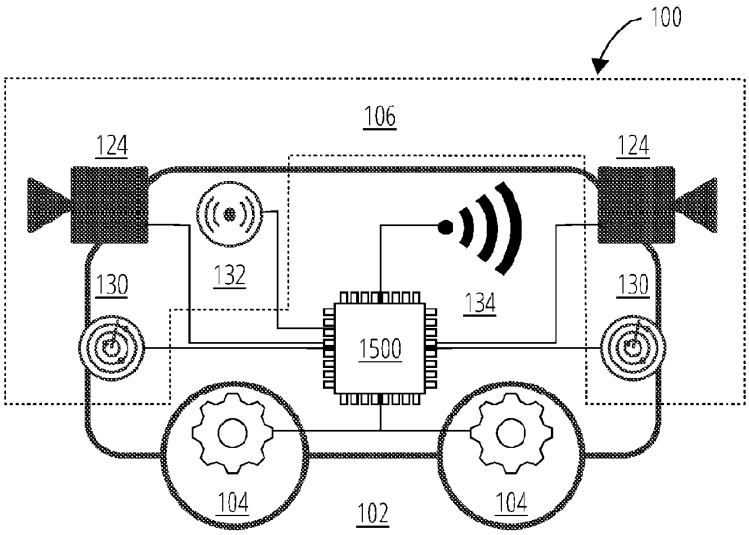
100
106
124
124
130
132
134
130
1500
104
102
104

FIG. 1C

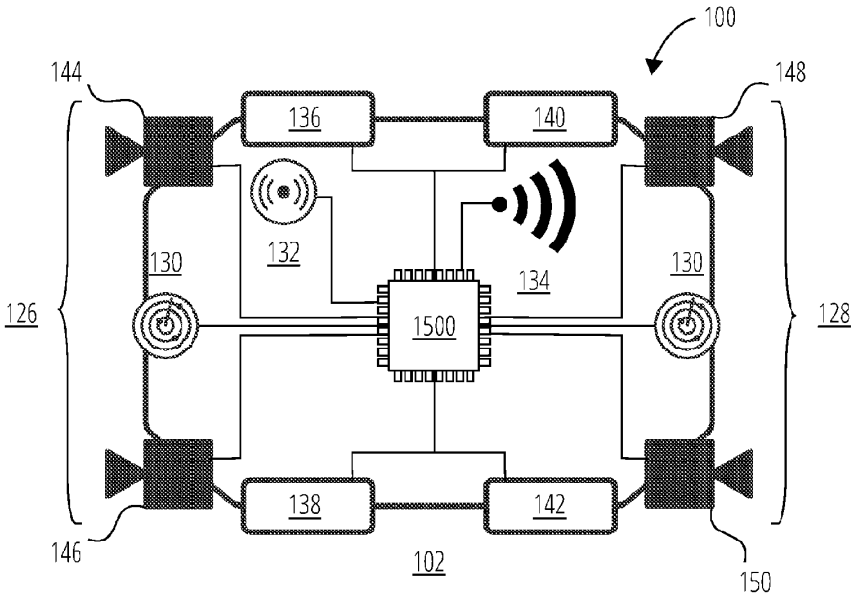
100
144
148
136
140
130
132
134
130
126
1500
128
138
142
146
102
150

FIG. 1D

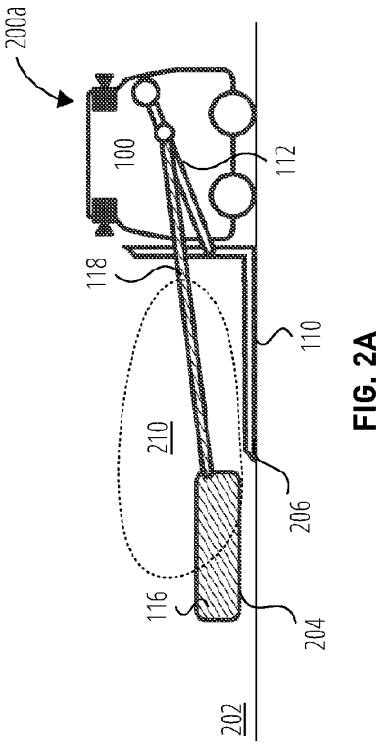

FIG. 2A

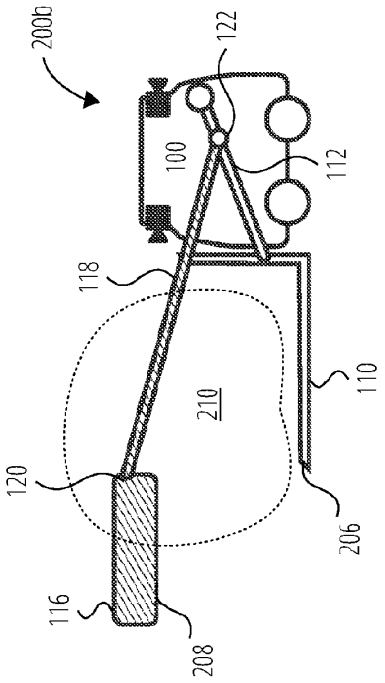

FIG. 2B

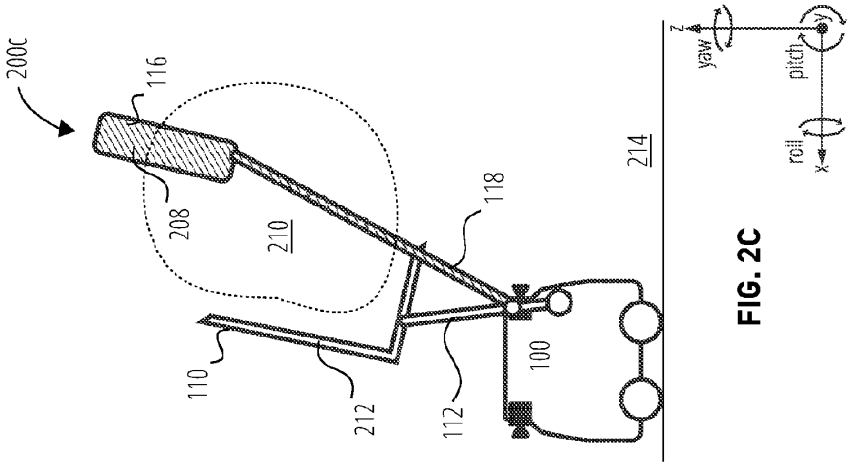

FIG. 2C

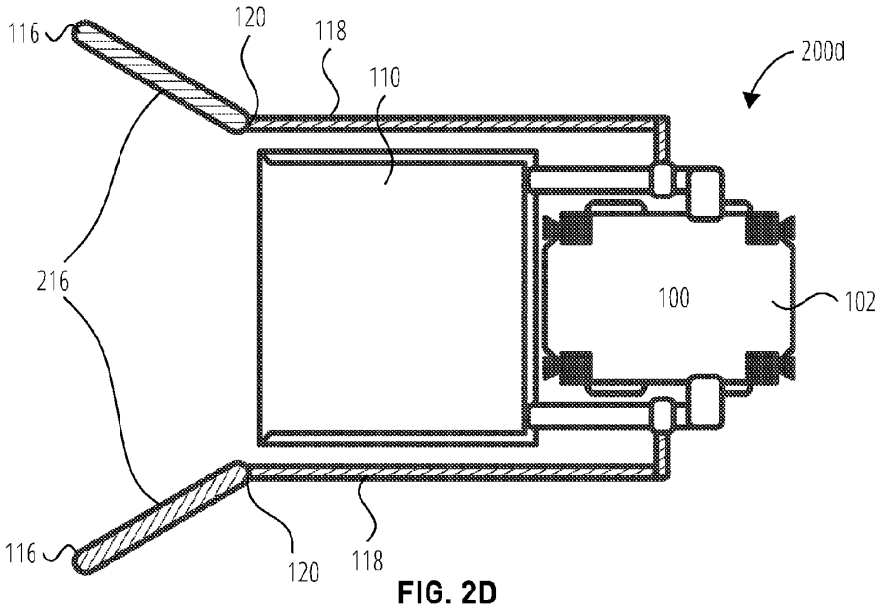
116
120
118
110
200d
216
100
102
116
120
118

FIG. 2D

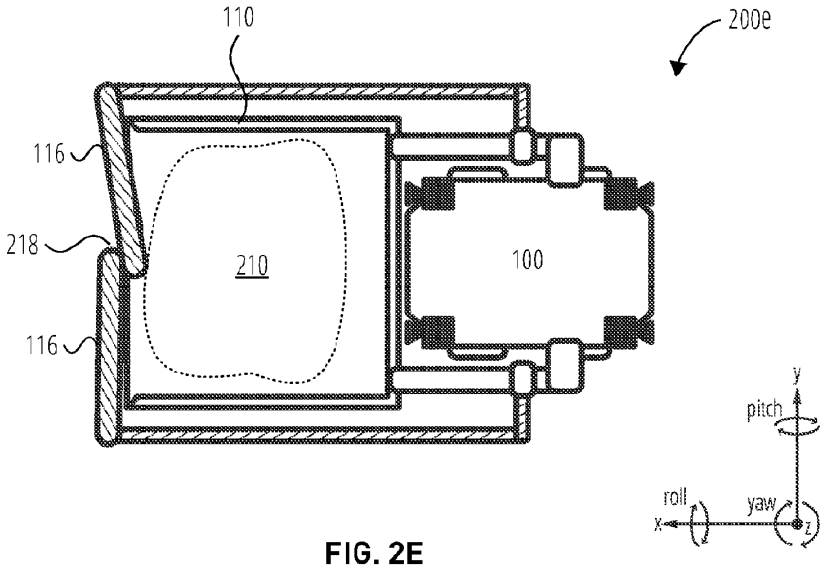
110
200e
116
218
210
100
116
y
pitch
roll
yaw
x
z

FIG. 2E

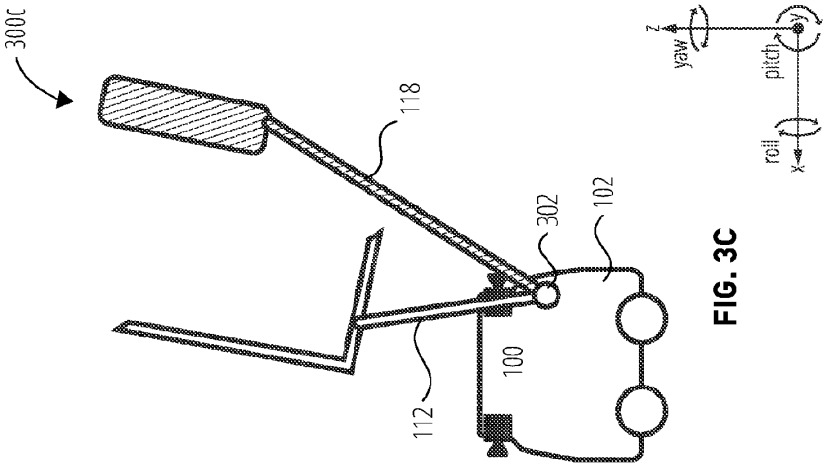

FIG. 3C

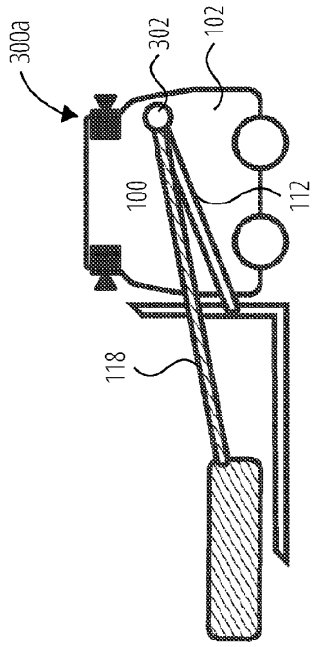

FIG. 3A

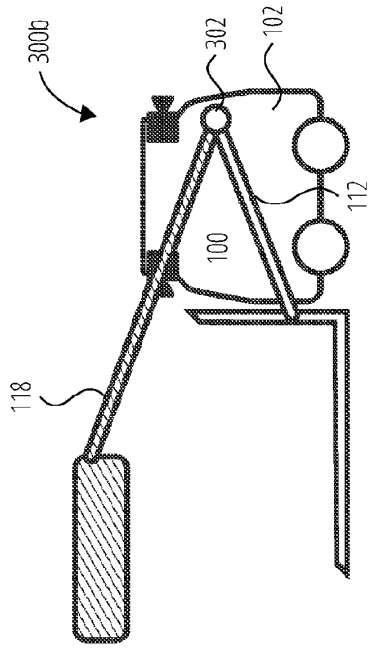

FIG. 3B

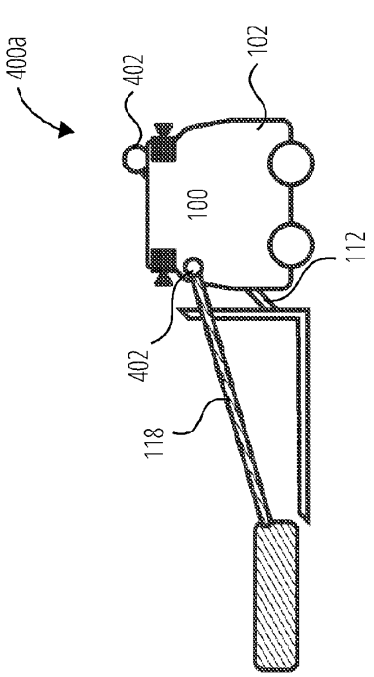

FIG. 4A

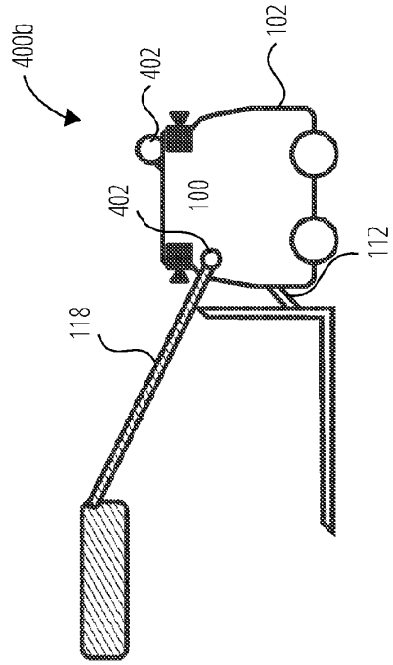

FIG. 4B

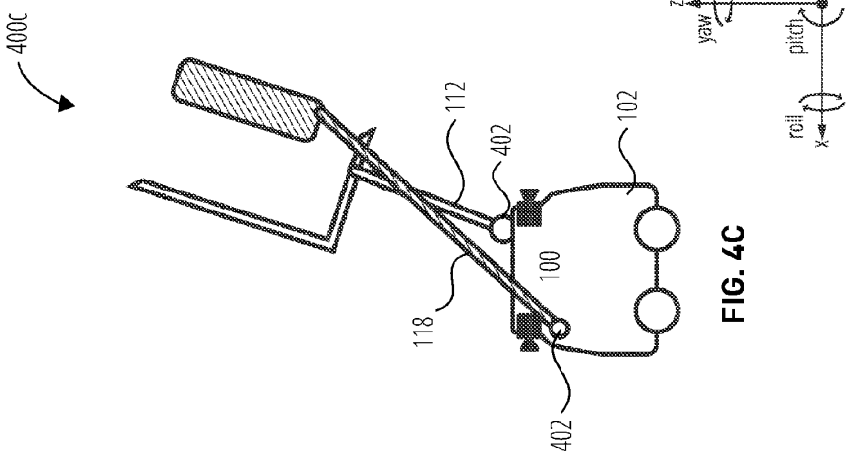

FIG. 4C

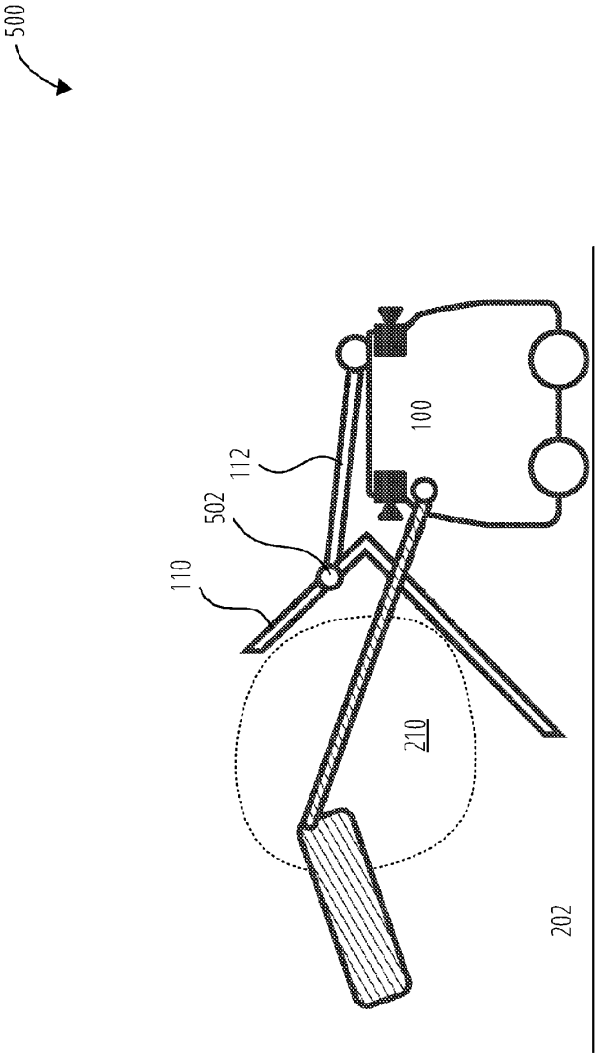

FIG. 5

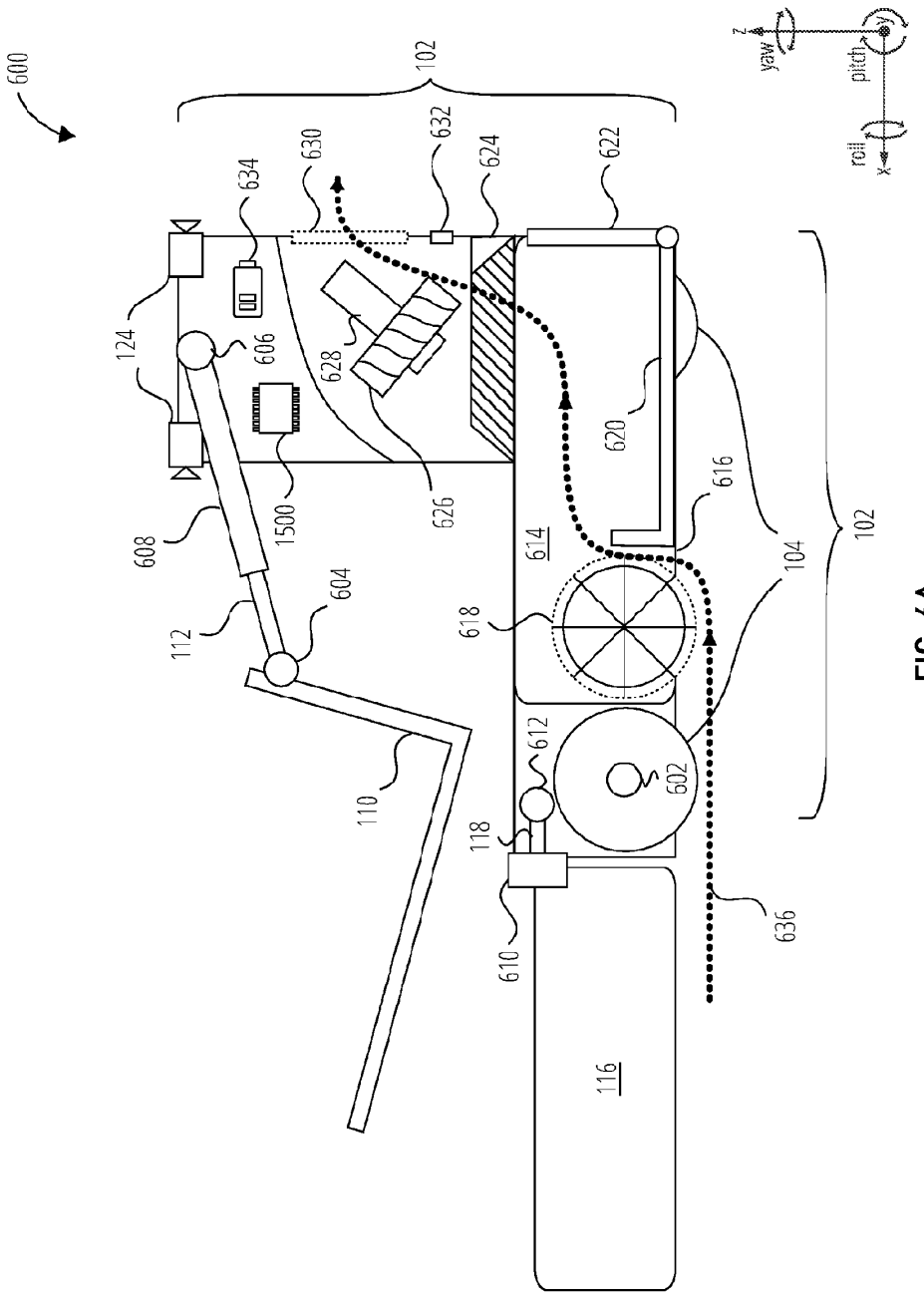
600
102
yaw
z
pitch
y
roll
x
634
630
632
624
622
124
606
628
620
616
608
1500
626
614
104
102
604
112
618
612
602
110
118
610
636
116

FIG. 6A

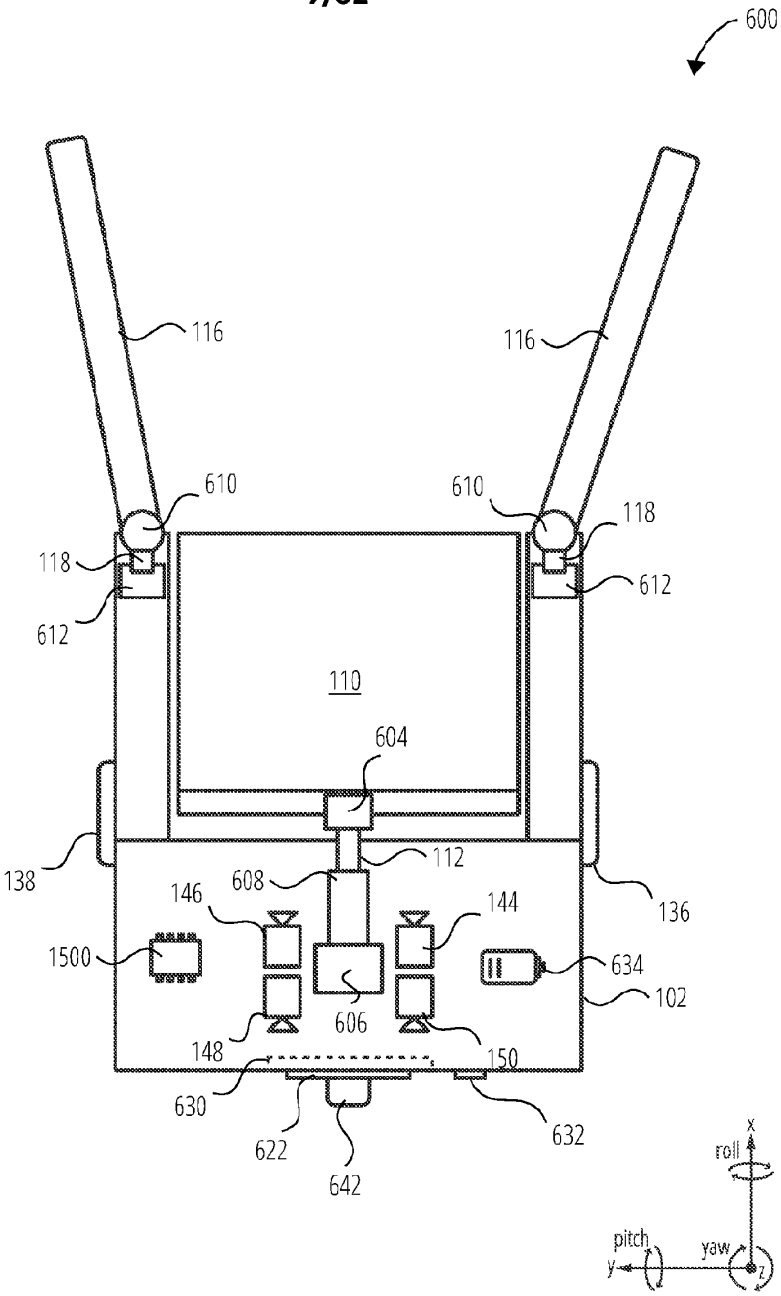
600
116
116
610
610
118
118
612
612
110
604
112
138
608
136
146
144
1500
634
102
606
148
150
630
632
622
642
x
roll
pitch
yaw
y
z

FIG. 6B

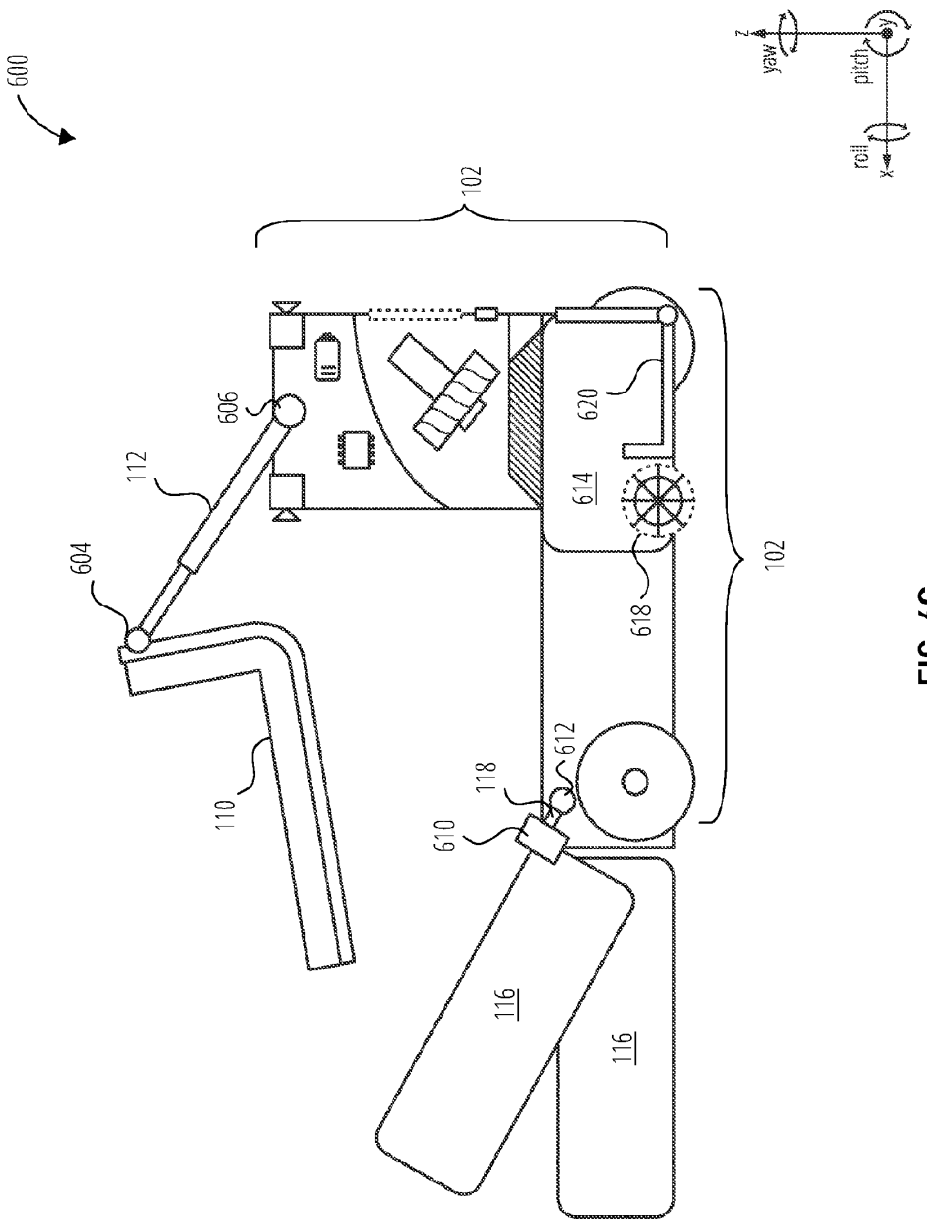
600
yaw
z
pitch
y
roll
x
102
606
620
112
614
604
102
618
612
118
110
610
116
116

FIG. 6C

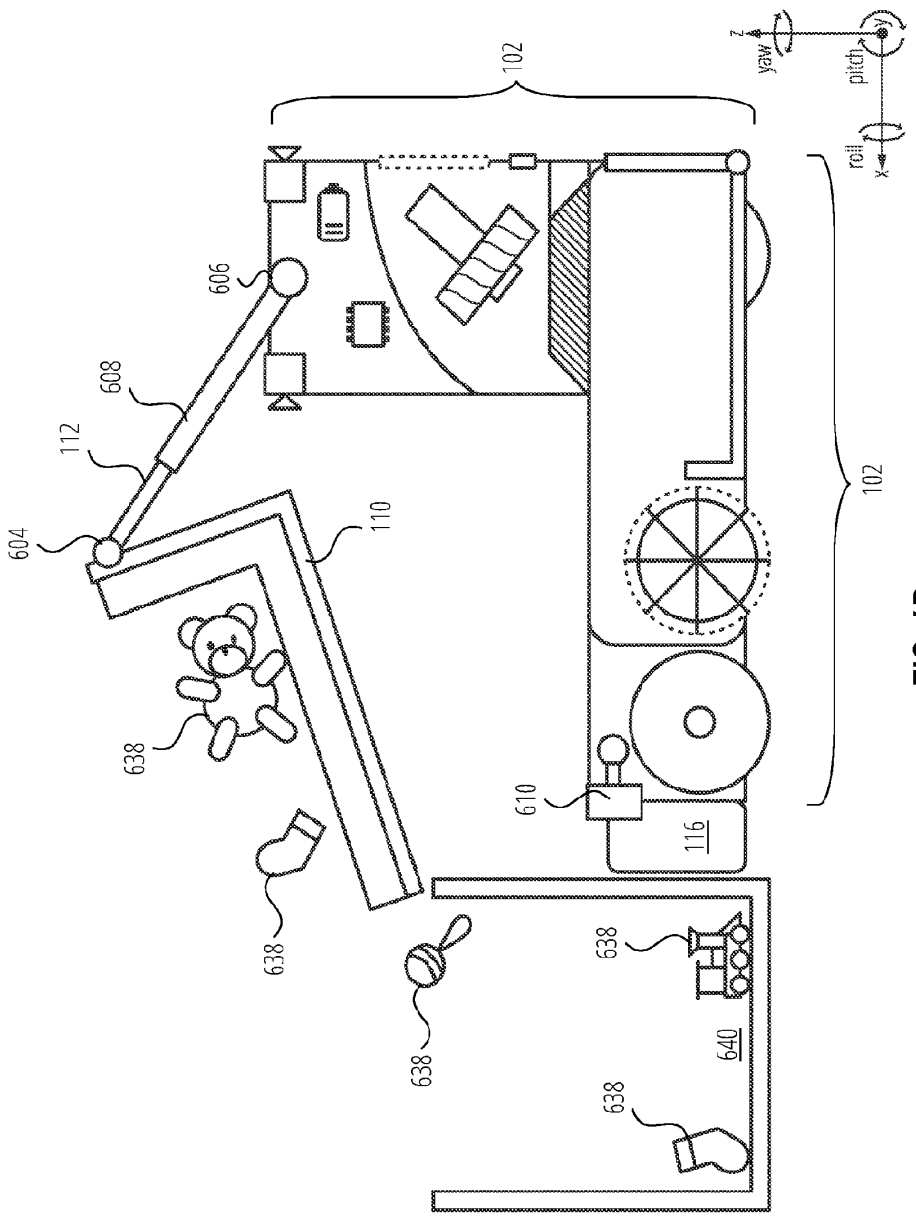
102
yaw
z
pitch
y
roll
x
606
608
112
604
110
638
638
638
638
610
116
640
102

FIG. 6D

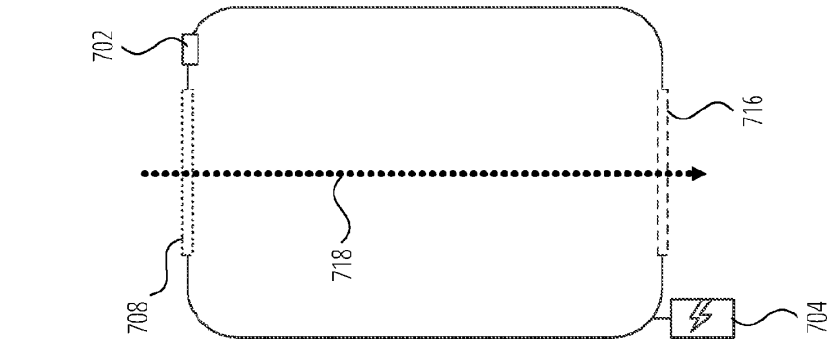

FIG. 7B

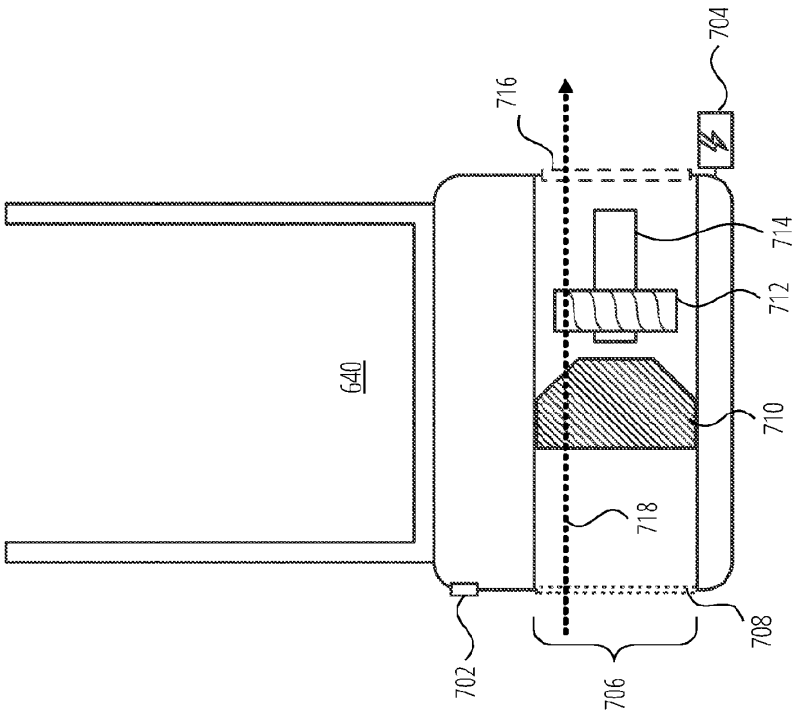

FIG. 7A

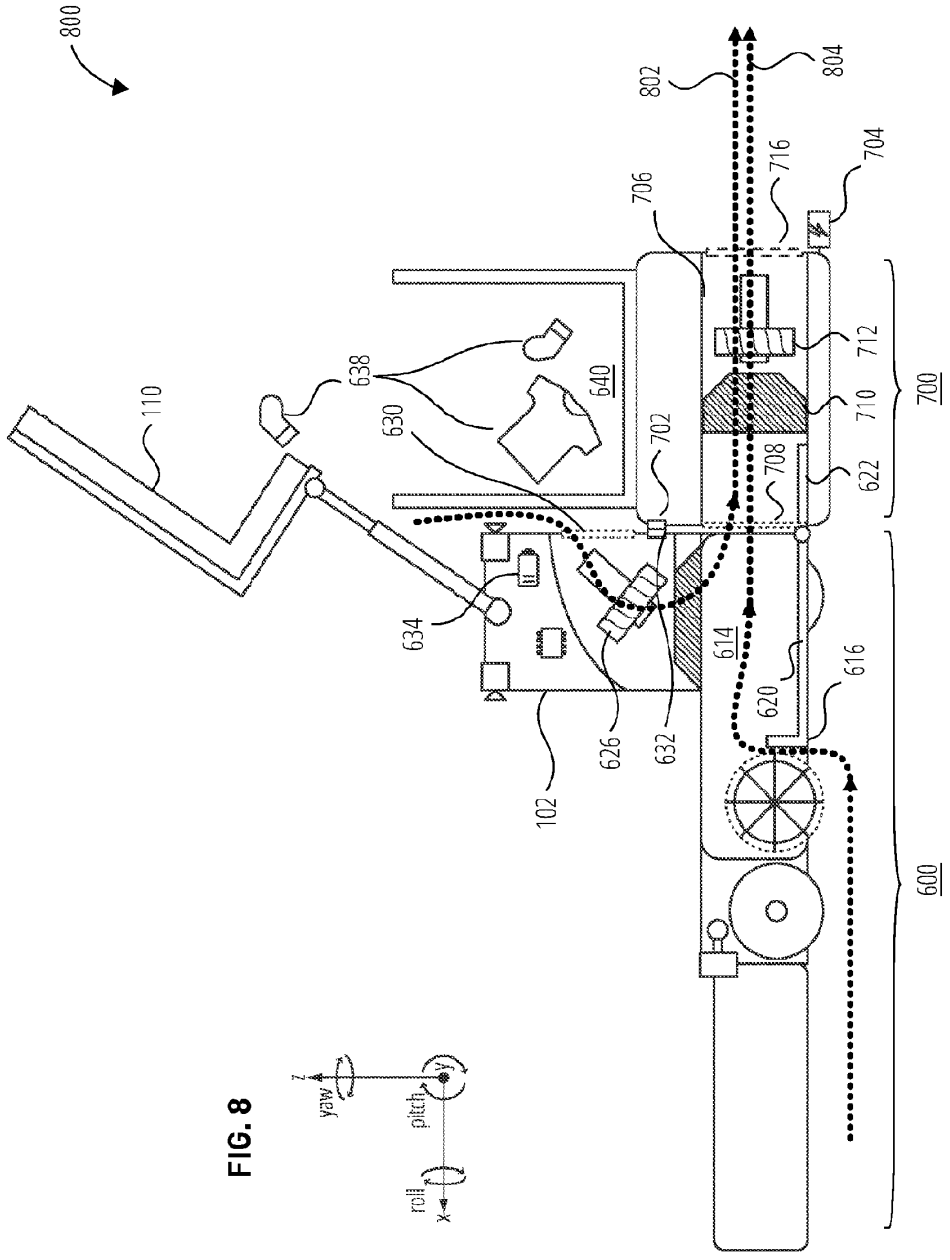
800
802
804
704
716
706
712
638
640
630
110
710
700
702
708
622
634
614
620
616
626
632
102
600
yaw
pitch
roll
z
y
x

FIG. 8

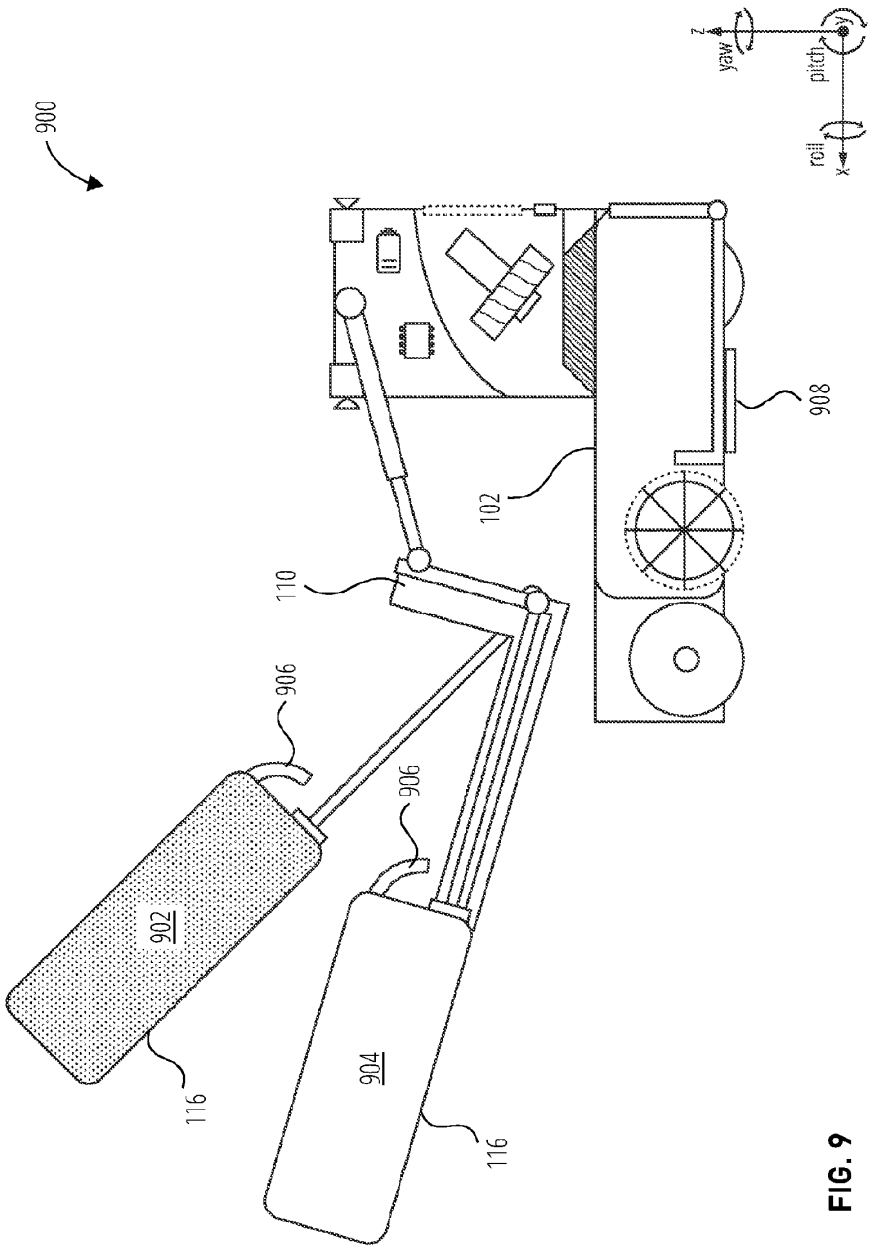

FIG. 9

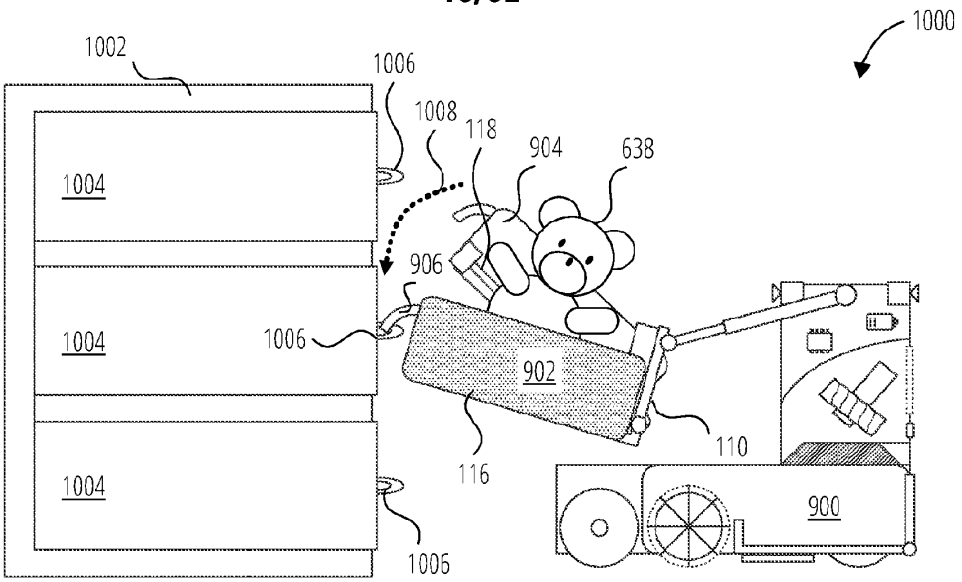

FIG. 10A

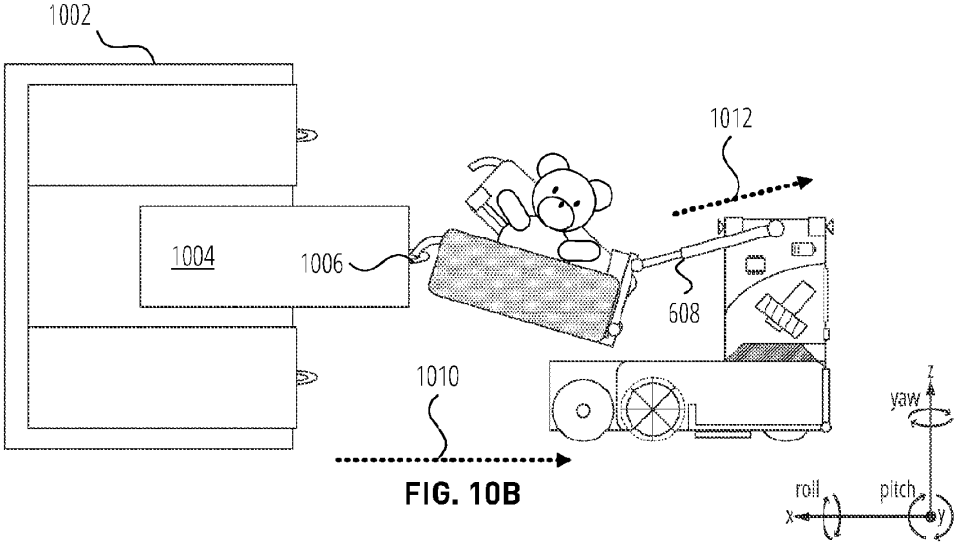

FIG. 10B

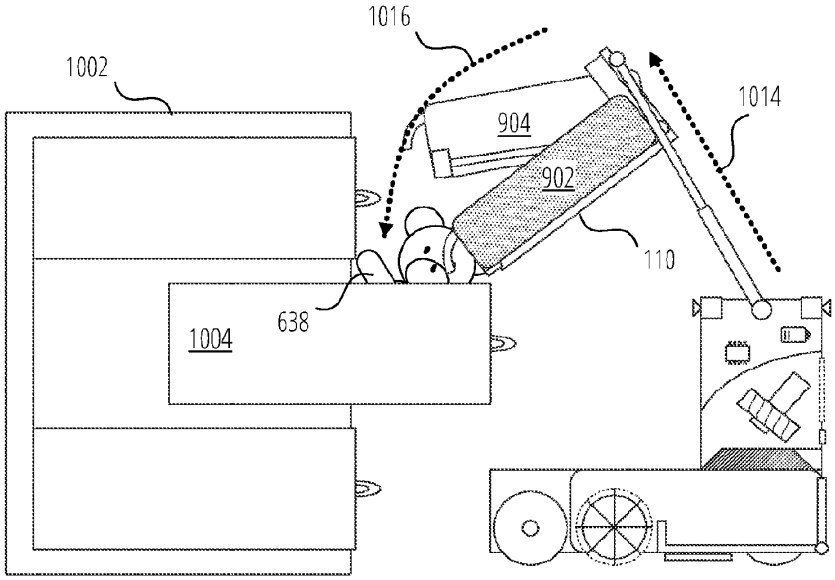

FIG. 10C

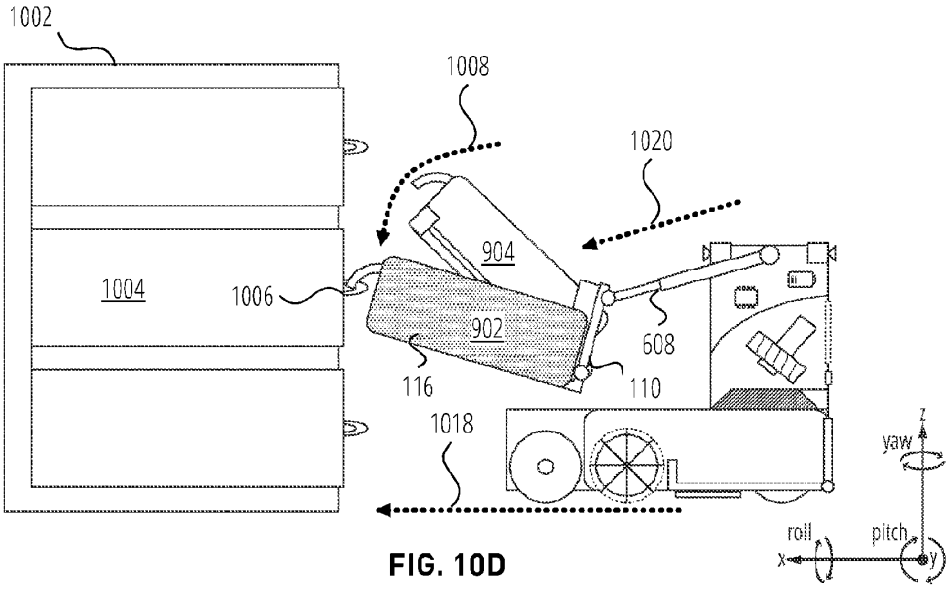

FIG. 10D

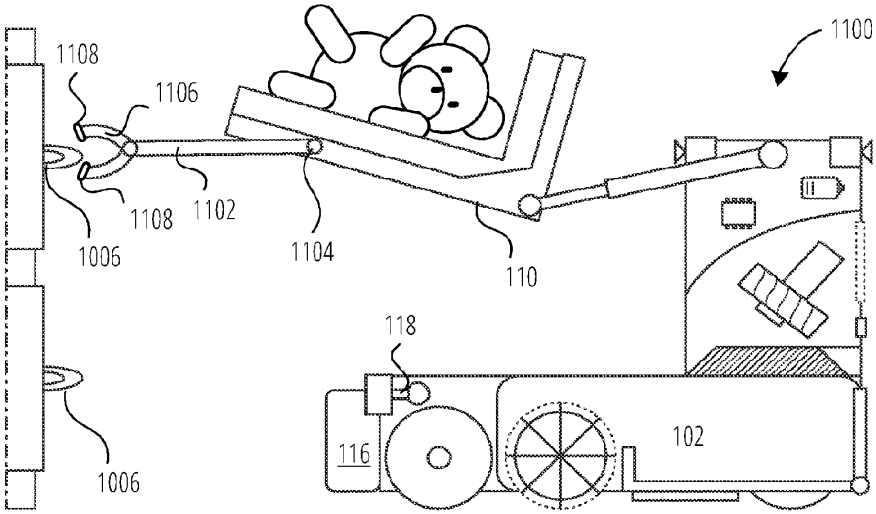
1100
1108
1106
1108
1102
1006
1104
110
118
102
116
1006

FIG. 11

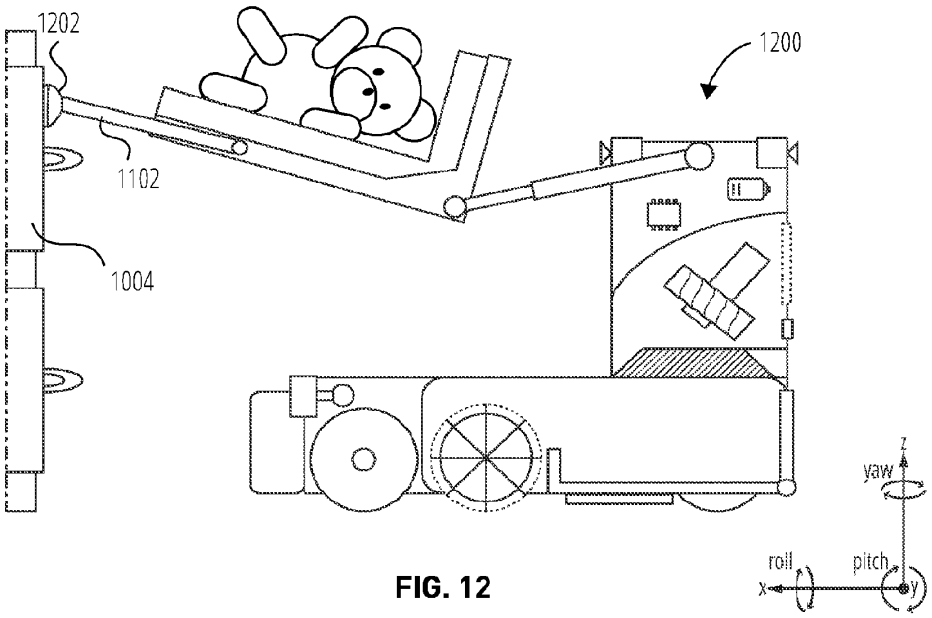
1202
1200
1102
1004
yaw
z
roll
pitch
x
y

FIG. 12

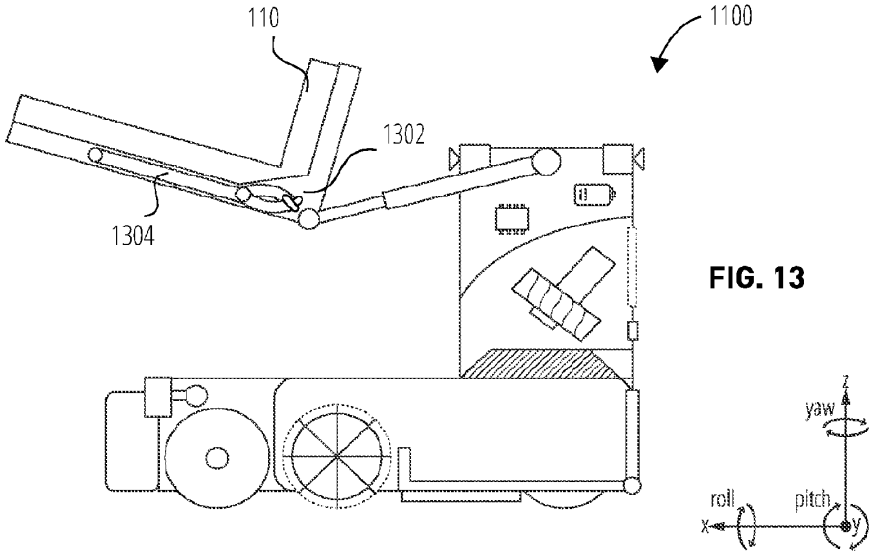
110
1100
1302
1304
yaw
roll
pitch
x
y
z

FIG. 13

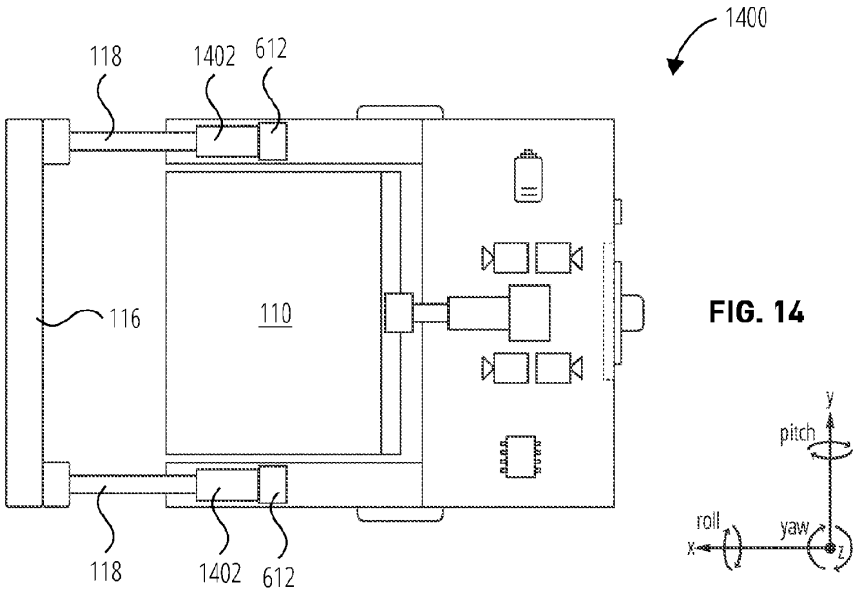
1400
118
1402
612
116
110
118
1402
612
y
pitch
roll
yaw
x
z

FIG. 14

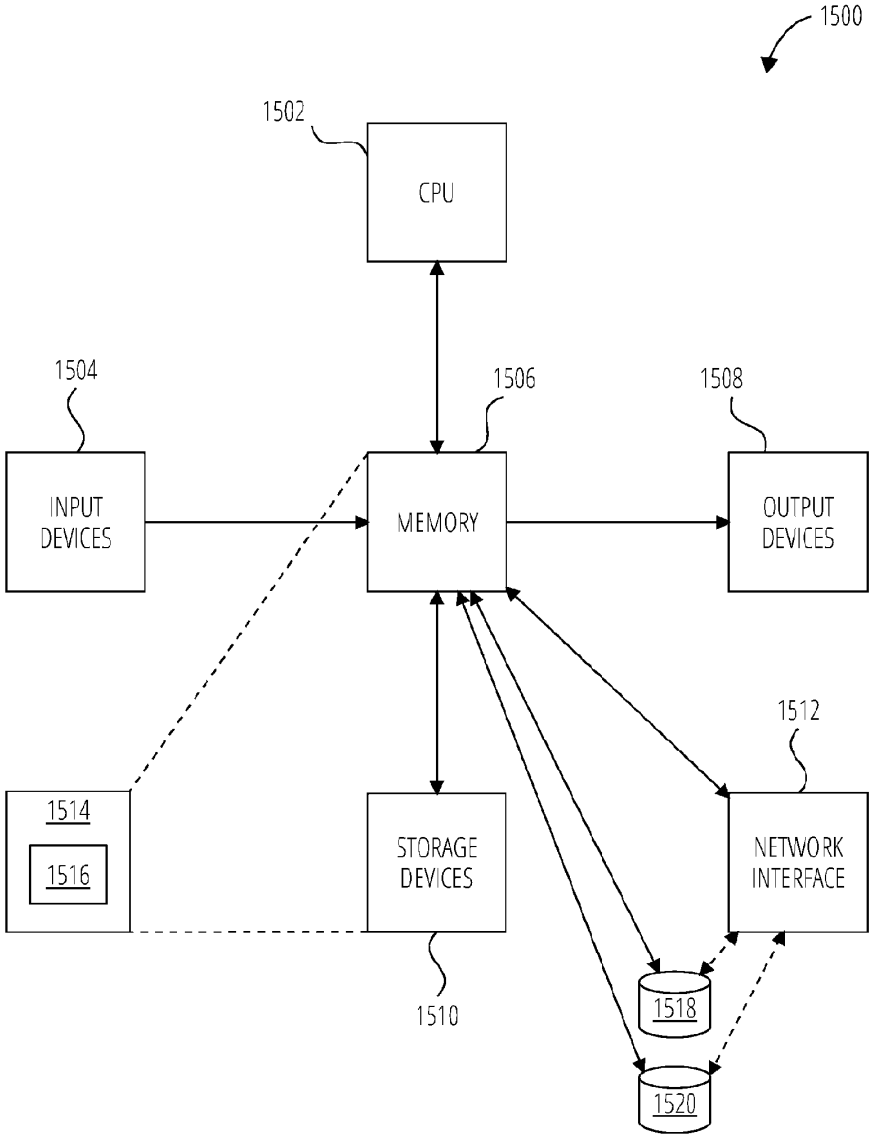
1500
1502
CPU
1504
INPUT DEVICES
1506
MEMORY
1508
OUTPUT DEVICES
1512
1514
1516
STORAGE DEVICES
NETWORK INTERFACE
1510
1518
1520

FIG. 15

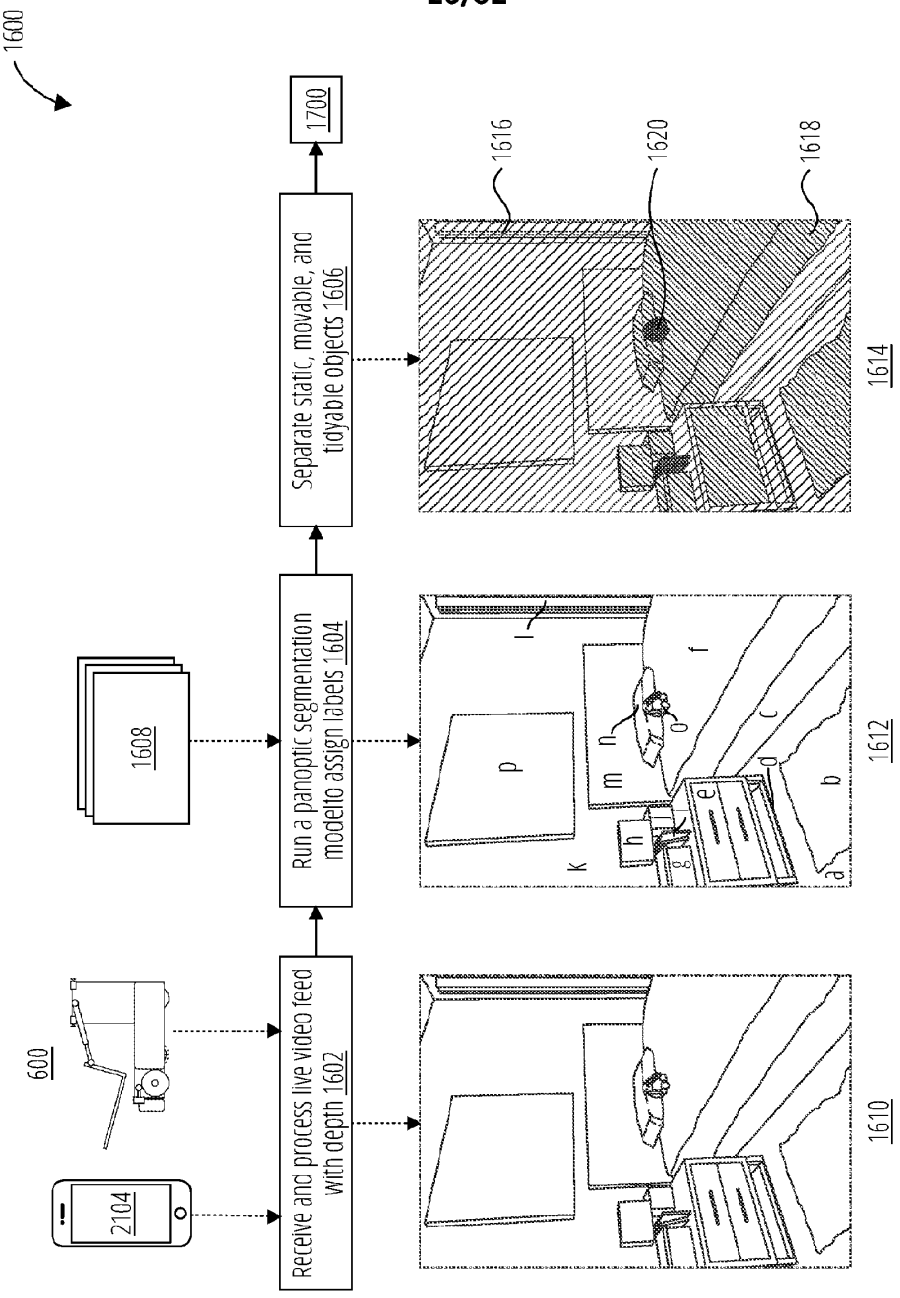
1600
600
2104
Receive and process live video feed with depth 1602
1608
Run a panoptic segmentation model to assign labels 1604
Separate static, movable, and tidyable objects 1606
1700
1610
1612
1614
1616
1618
1620

FIG. 16

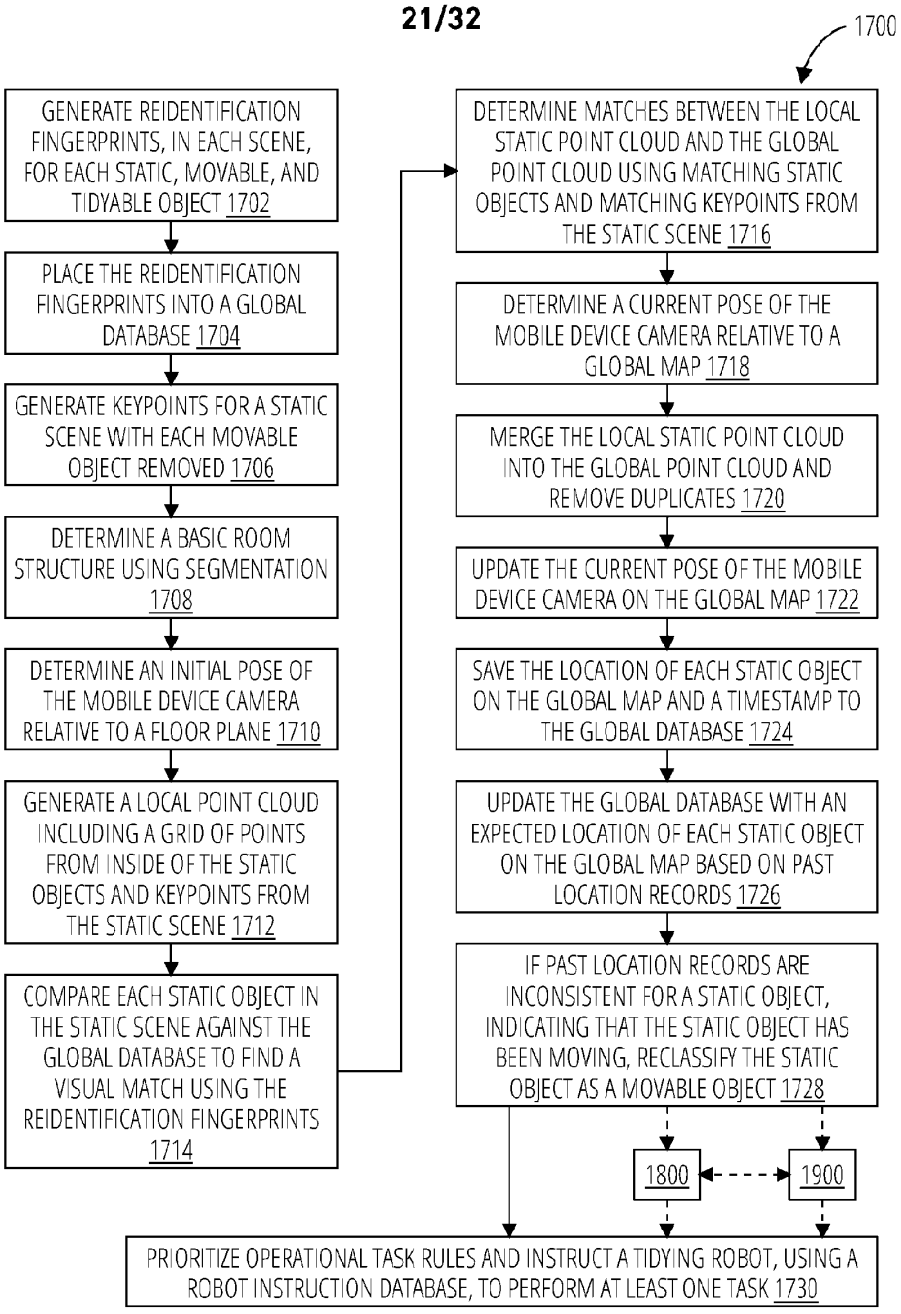
1700
GENERATE REIDENTIFICATION FINGERPRINTS, IN EACH SCENE, FOR EACH STATIC, MOVABLE, AND TIDYABLE OBJECT 1702
PLACE THE REIDENTIFICATION FINGERPRINTS INTO A GLOBAL DATABASE 1704
GENERATE KEYPOINTS FOR A STATIC SCENE WITH EACH MOVABLE OBJECT REMOVED 1706
DETERMINE A BASIC ROOM STRUCTURE USING SEGMENTATION 1708
DETERMINE AN INITIAL POSE OF THE MOBILE DEVICE CAMERA RELATIVE TO A FLOOR PLANE 1710
GENERATE A LOCAL POINT CLOUD INCLUDING A GRID OF POINTS FROM INSIDE OF THE STATIC OBJECTS AND KEYPOINTS FROM THE STATIC SCENE 1712
COMPARE EACH STATIC OBJECT IN THE STATIC SCENE AGAINST THE GLOBAL DATABASE TO FIND A VISUAL MATCH USING THE REIDENTIFICATION FINGERPRINTS 1714
DETERMINE MATCHES BETWEEN THE LOCAL STATIC POINT CLOUD AND THE GLOBAL POINT CLOUD USING MATCHING STATIC OBJECTS AND MATCHING KEYPOINTS FROM THE STATIC SCENE 1716
DETERMINE A CURRENT POSE OF THE MOBILE DEVICE CAMERA RELATIVE TO A GLOBAL MAP 1718
MERGE THE LOCAL STATIC POINT CLOUD INTO THE GLOBAL POINT CLOUD AND REMOVE DUPLICATES 1720
UPDATE THE CURRENT POSE OF THE MOBILE DEVICE CAMERA ON THE GLOBAL MAP 1722
SAVE THE LOCATION OF EACH STATIC OBJECT ON THE GLOBAL MAP AND A TIMESTAMP TO THE GLOBAL DATABASE 1724
UPDATE THE GLOBAL DATABASE WITH AN EXPECTED LOCATION OF EACH STATIC OBJECT ON THE GLOBAL MAP BASED ON PAST LOCATION RECORDS 1726
IF PAST LOCATION RECORDS ARE INCONSISTENT FOR A STATIC OBJECT, INDICATING THAT THE STATIC OBJECT HAS BEEN MOVING, RECLASSIFY THE STATIC OBJECT AS A MOVABLE OBJECT 1728
1800
1900
PRIORITIZE OPERATIONAL TASK RULES AND INSTRUCT A TIDYING ROBOT, USING A ROBOT INSTRUCTION DATABASE, TO PERFORM AT LEAST ONE TASK 1730

FIG. 17

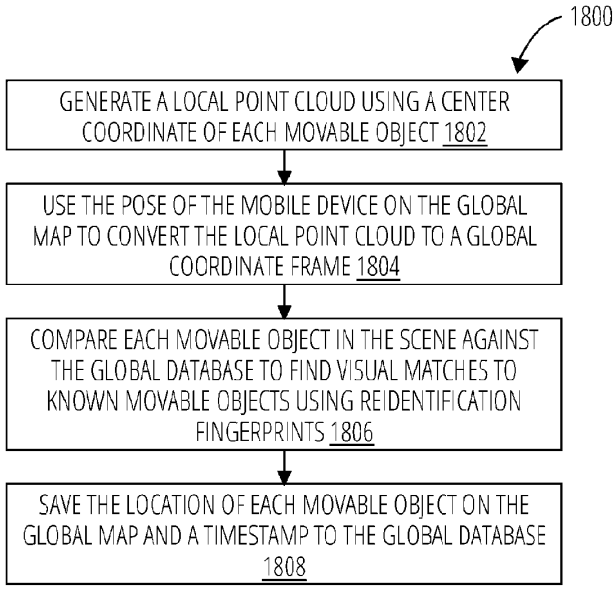
1800
GENERATE A LOCAL POINT CLOUD USING A CENTER COORDINATE OF EACH MOVABLE OBJECT 1802
USE THE POSE OF THE MOBILE DEVICE ON THE GLOBAL MAP TO CONVERT THE LOCAL POINT CLOUD TO A GLOBAL COORDINATE FRAME 1804
COMPARE EACH MOVABLE OBJECT IN THE SCENE AGAINST THE GLOBAL DATABASE TO FIND VISUAL MATCHES TO KNOWN MOVABLE OBJECTS USING REIDENTIFICATION FINGERPRINTS 1806
SAVE THE LOCATION OF EACH MOVABLE OBJECT ON THE GLOBAL MAP AND A TIMESTAMP TO THE GLOBAL DATABASE 1808

FIG. 18

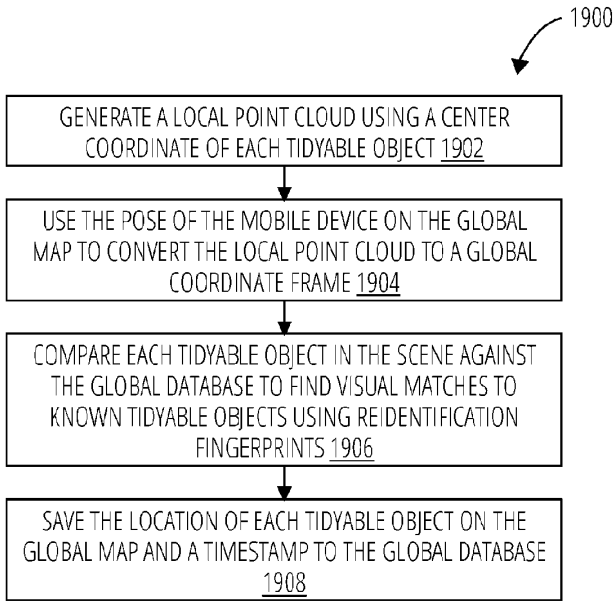
1900
GENERATE A LOCAL POINT CLOUD USING A CENTER COORDINATE OF EACH TIDYABLE OBJECT 1902
USE THE POSE OF THE MOBILE DEVICE ON THE GLOBAL MAP TO CONVERT THE LOCAL POINT CLOUD TO A GLOBAL COORDINATE FRAME 1904
COMPARE EACH TIDYABLE OBJECT IN THE SCENE AGAINST THE GLOBAL DATABASE TO FIND VISUAL MATCHES TO KNOWN TIDYABLE OBJECTS USING REIDENTIFICATION FINGERPRINTS 1906
SAVE THE LOCATION OF EACH TIDYABLE OBJECT ON THE GLOBAL MAP AND A TIMESTAMP TO THE GLOBAL DATABASE 1908

FIG. 19

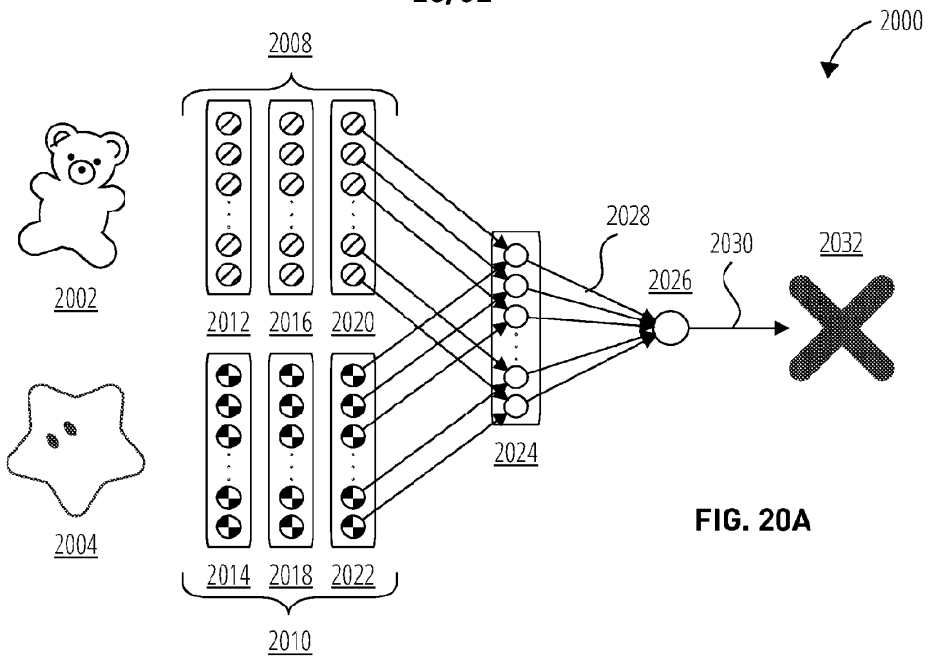

FIG. 20A

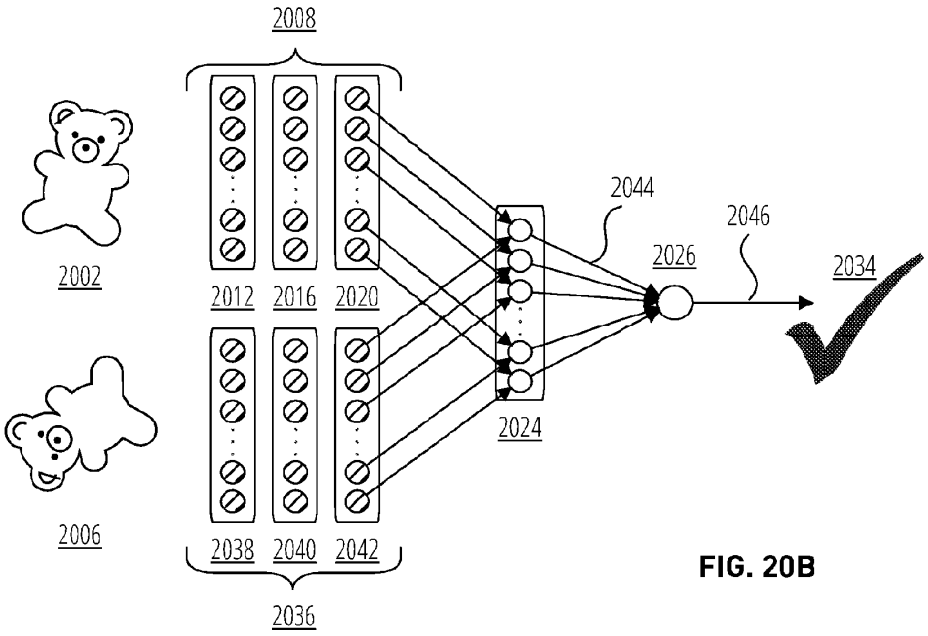

FIG. 20B

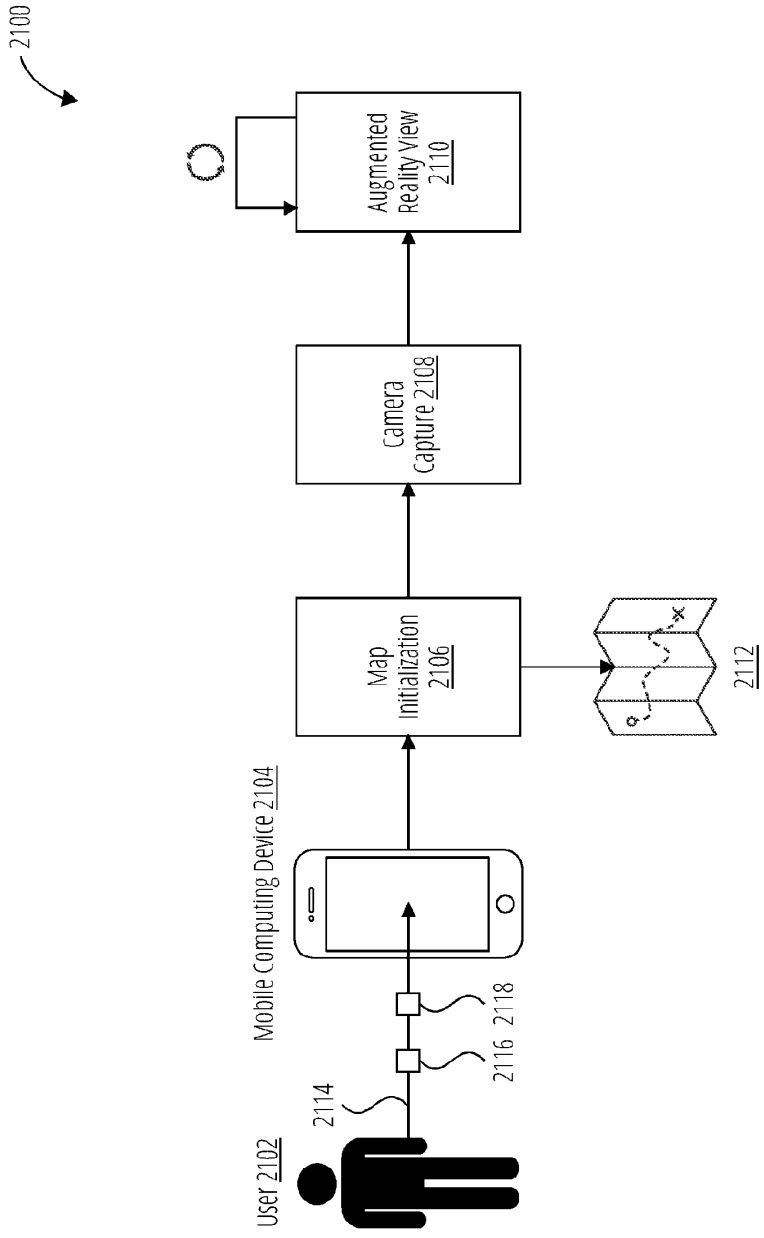
2100
Augmented Reality View 2110
Camera Capture 2108
Map Initialization 2106
2112
Mobile Computing Device 2104
2116 2118
2114
User 2102

FIG. 21

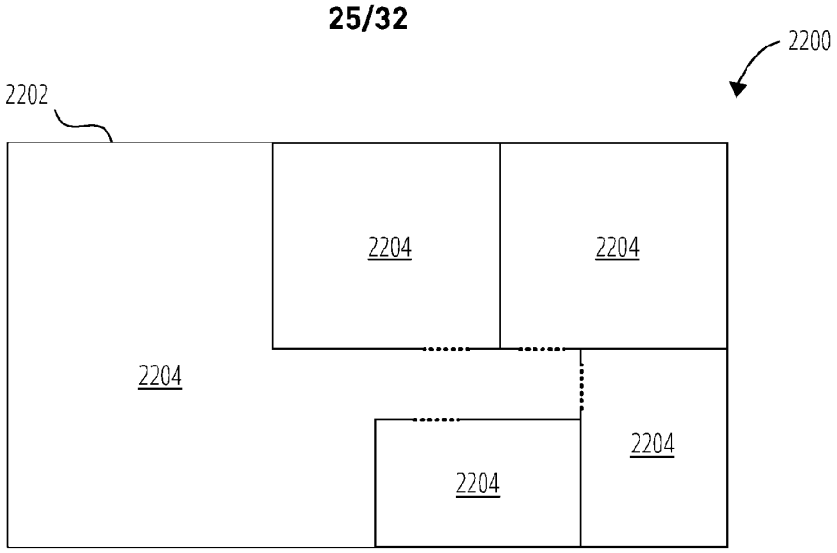

FIG. 22A

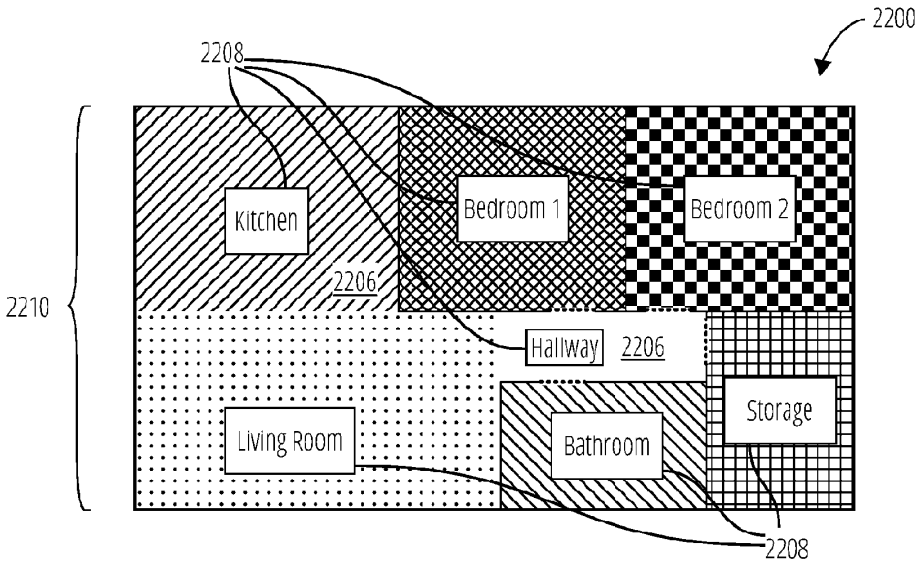

FIG. 22B

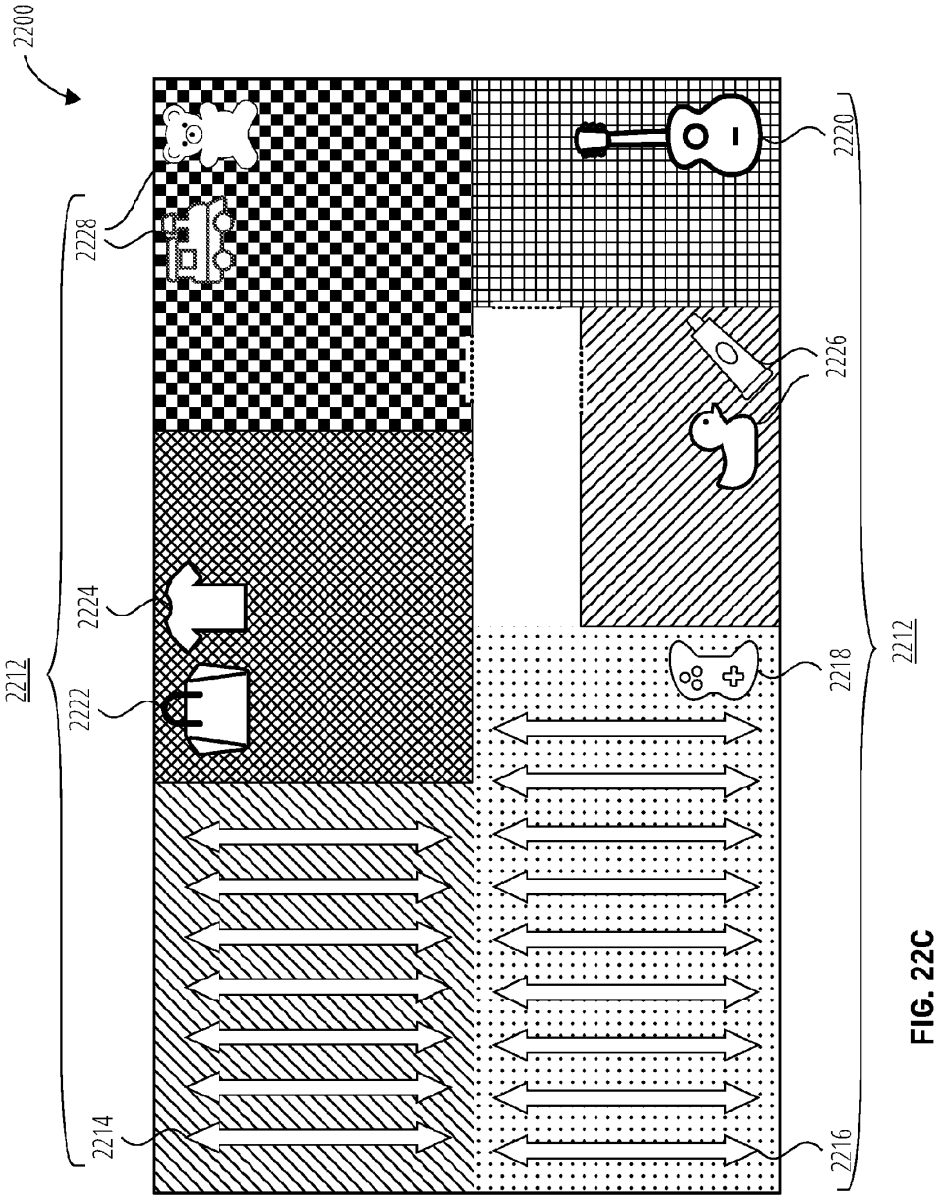

FIG. 22C

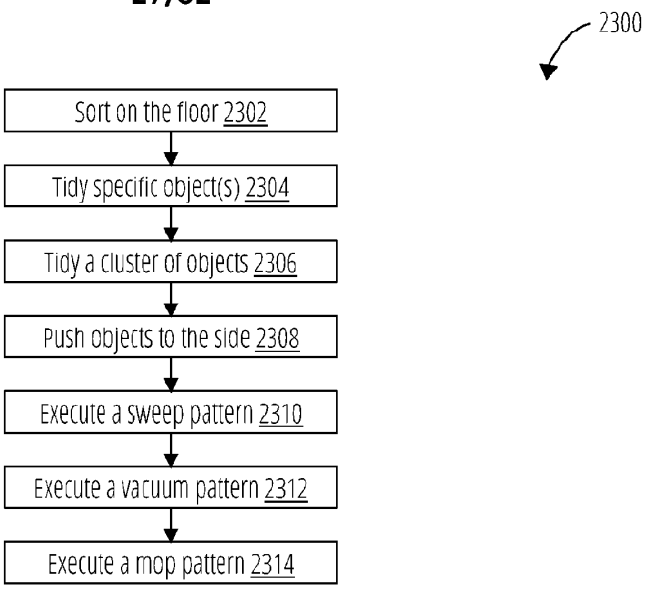
2300
Sort on the floor 2302
Tidy specific object(s) 2304
Tidy a cluster of objects 2306
Push objects to the side 2308
Execute a sweep pattern 2310
Execute a vacuum pattern 2312
Execute a mop pattern 2314

FIG. 23

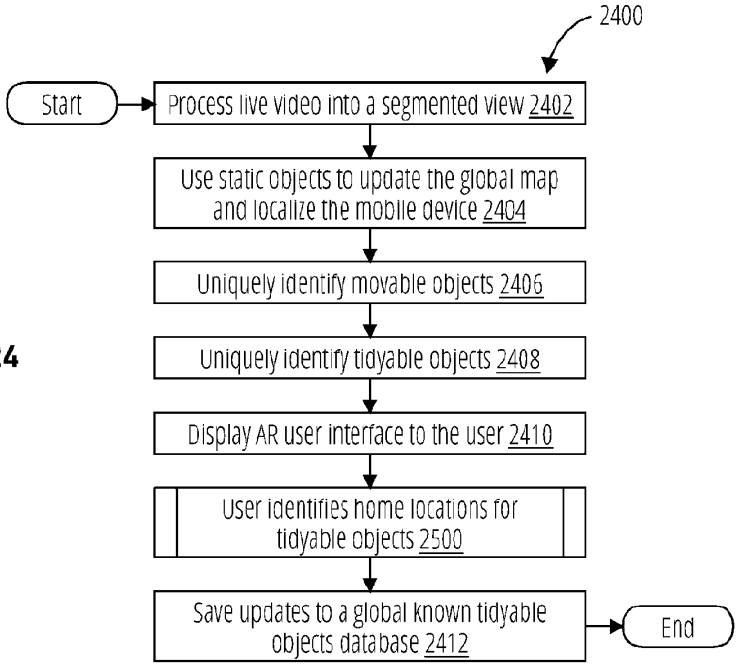
2400
Start
Process live video into a segmented view 2402
Use static objects to update the global map and localize the mobile device 2404
Uniquely identify movable objects 2406
Uniquely identify tidyable objects 2408
Display AR user interface to the user 2410
User identifies home locations for tidyable objects 2500
Save updates to a global known tidyable objects database 2412
End

FIG. 24

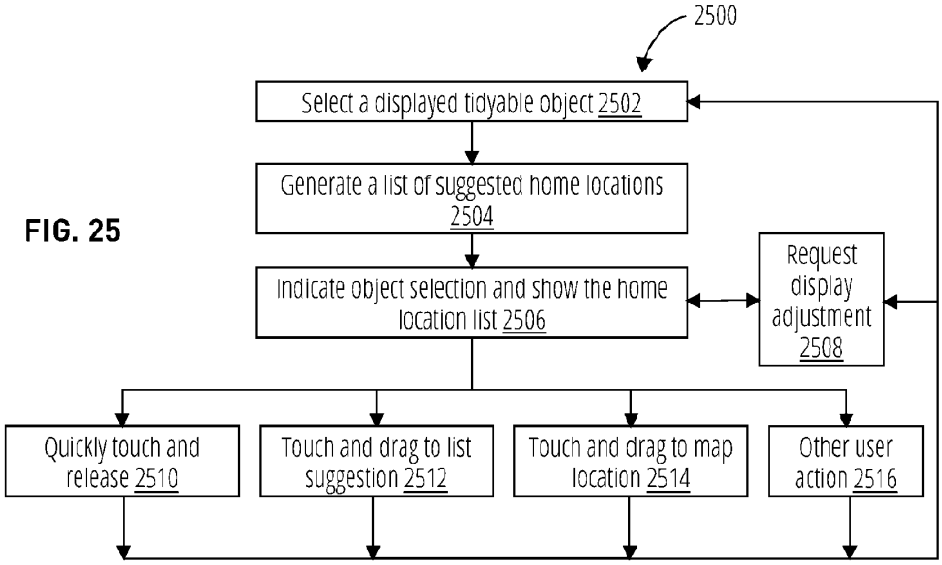
2500
Select a displayed tidyable object 2502
Generate a list of suggested home locations 2504
Indicate object selection and show the home location list 2506
Request display adjustment 2508
Quickly touch and release 2510
Touch and drag to list suggestion 2512
Touch and drag to map location 2514
Other user action 2516

FIG. 25

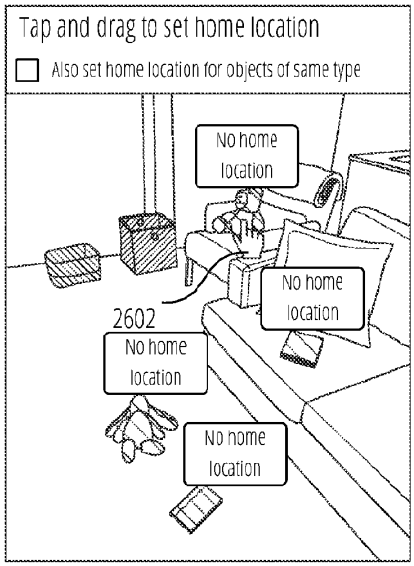

FIG. 26A

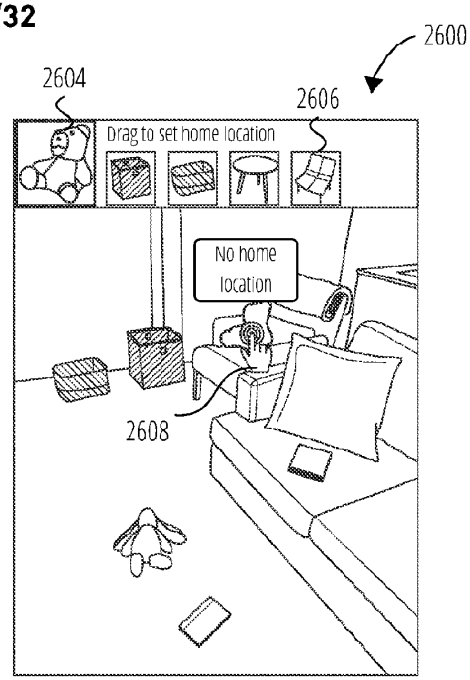

FIG. 26B

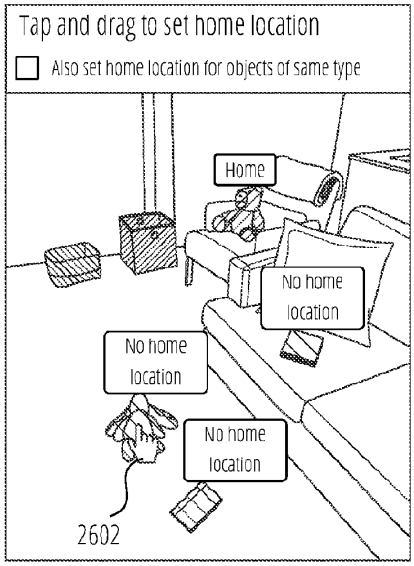

FIG. 26C

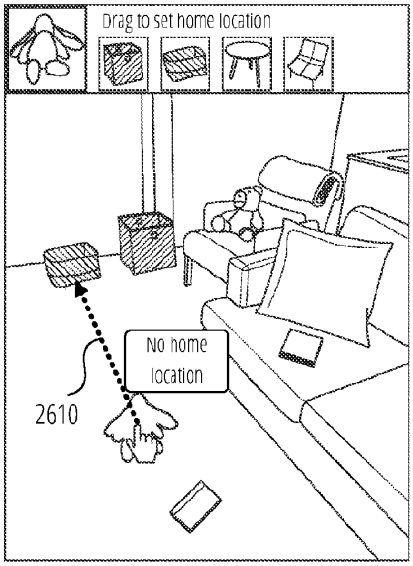

FIG. 26D

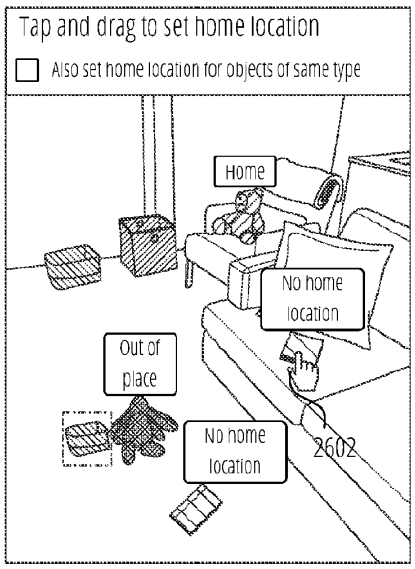

FIG. 26E

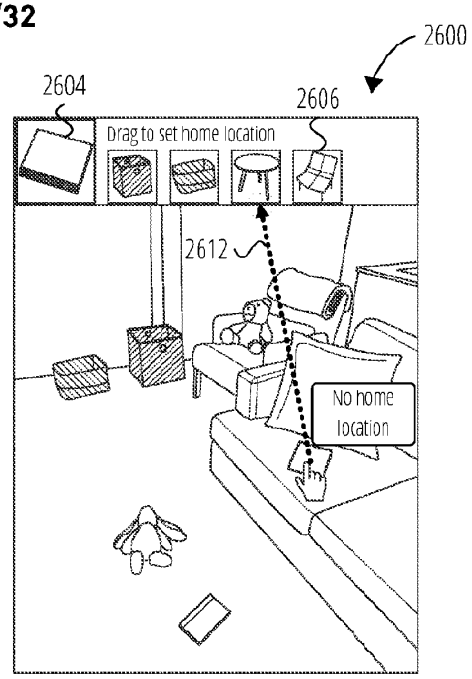

FIG. 26F

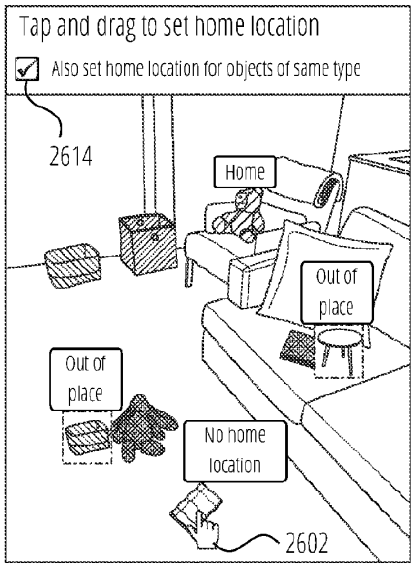

FIG. 26G

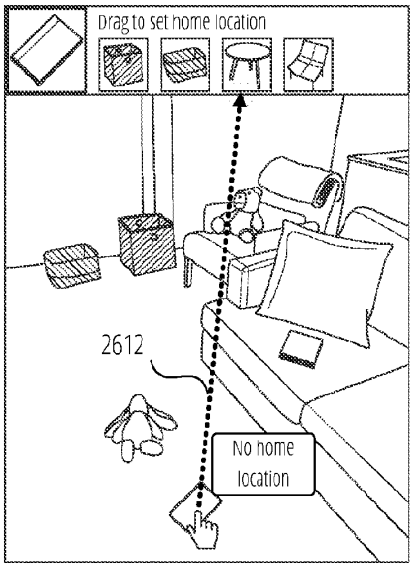

FIG. 26H

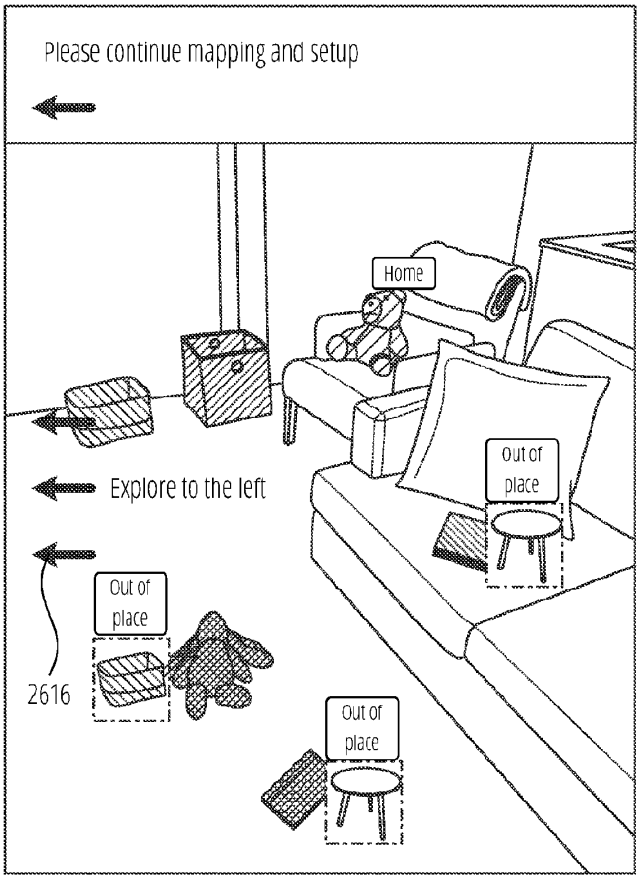
2600
Please continue mapping and setup
Home
Out of place
Explore to the left
Out of place
2616
Out of place

FIG. 26I

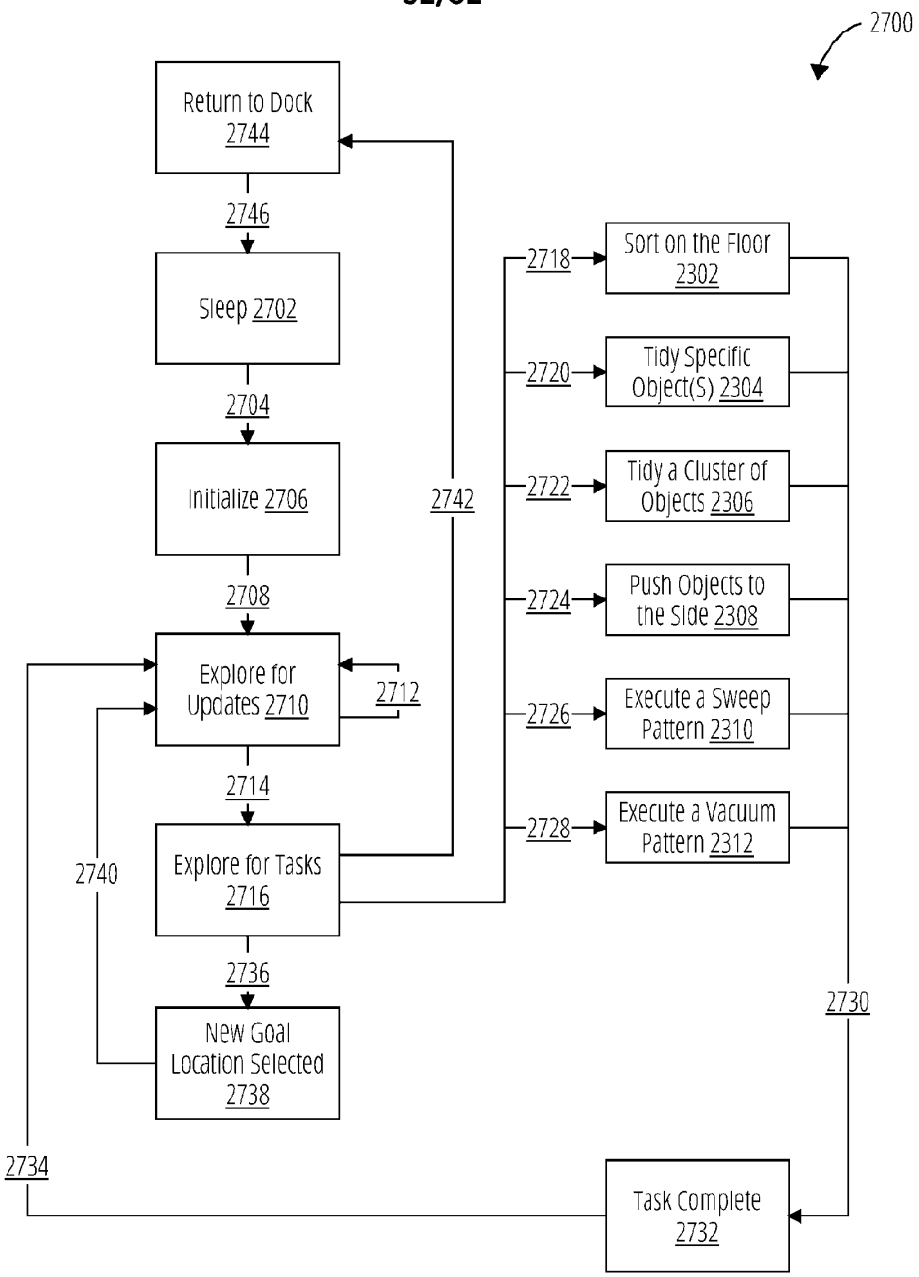
2700
Return to Dock 2744
2746
Sleep 2702
2704
Initialize 2706
2708
Explore for Updates 2710
2712
2714
Explore for Tasks 2716
2736
New Goal Location Selected 2738
2740
2742
2734
2718
Sort on the Floor 2302
2720
Tidy Specific Object(S) 2304
2722
Tidy a Cluster of Objects 2306
2724
Push Objects to the Side 2308
2726
Execute a Sweep Pattern 2310
2728
Execute a Vacuum Pattern 2312
2730
Task Complete 2732

FIG. 27