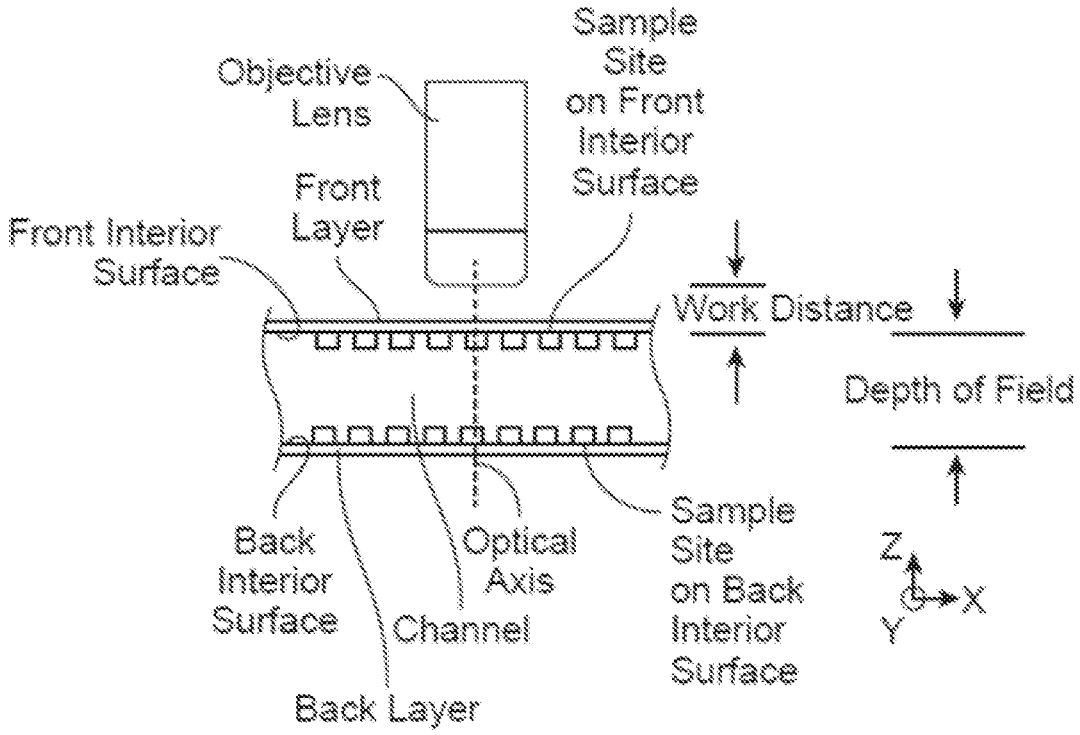
Objective Lens
Sample Site on Front Interior Surface
Front Layer
Front Interior Surface
Work Distance
Depth of Field
Back Interior Surface
Optical Axis
Channel
Sample Site on Back Interior Surface
Back Layer
Z
X
Y

FIG. 1A

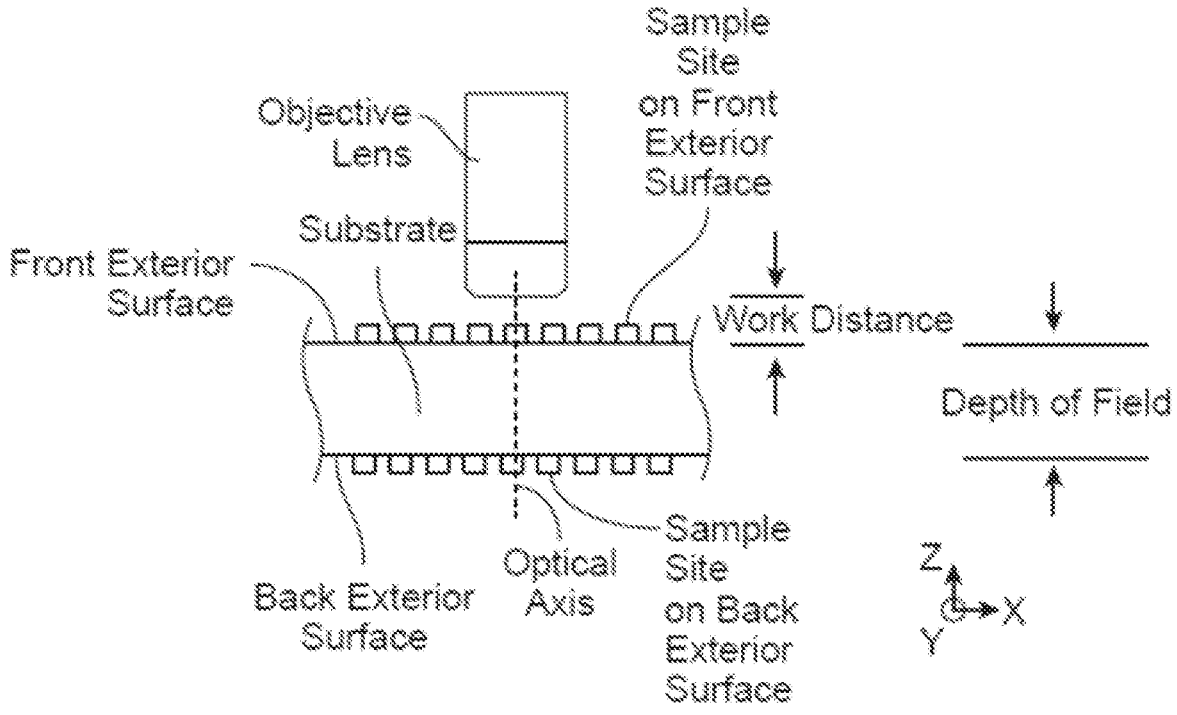
Sample Site on Front Exterior Surface
Objective Lens
Substrate
Front Exterior Surface
Work Distance
Depth of Field
Back Exterior Surface
Optical Axis
Sample Site on Back Exterior Surface
Z
X
Y

FIG. 1B

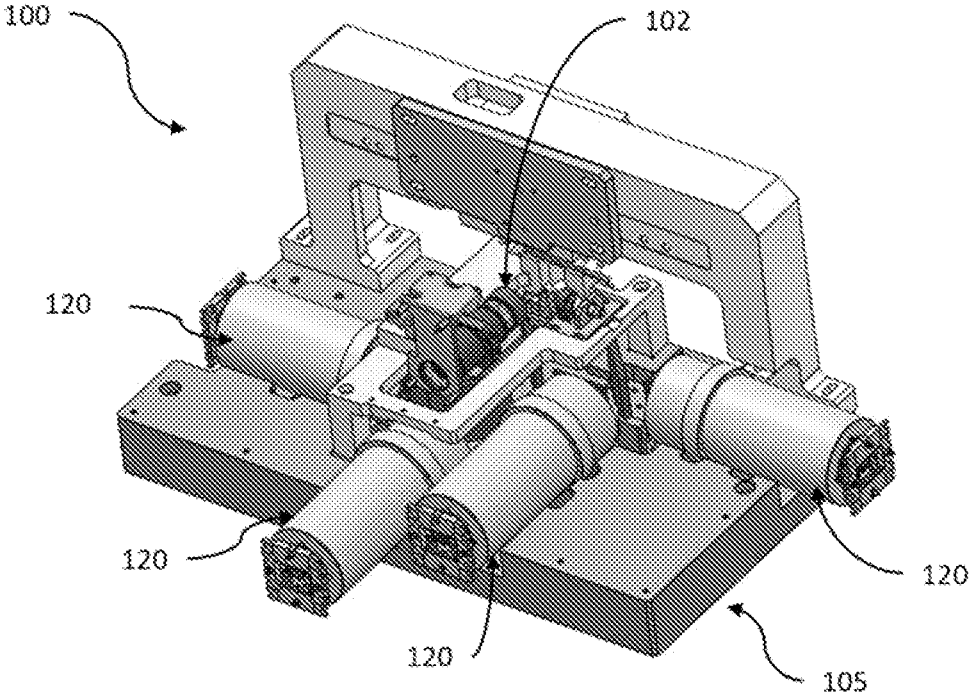


FIG. 2A

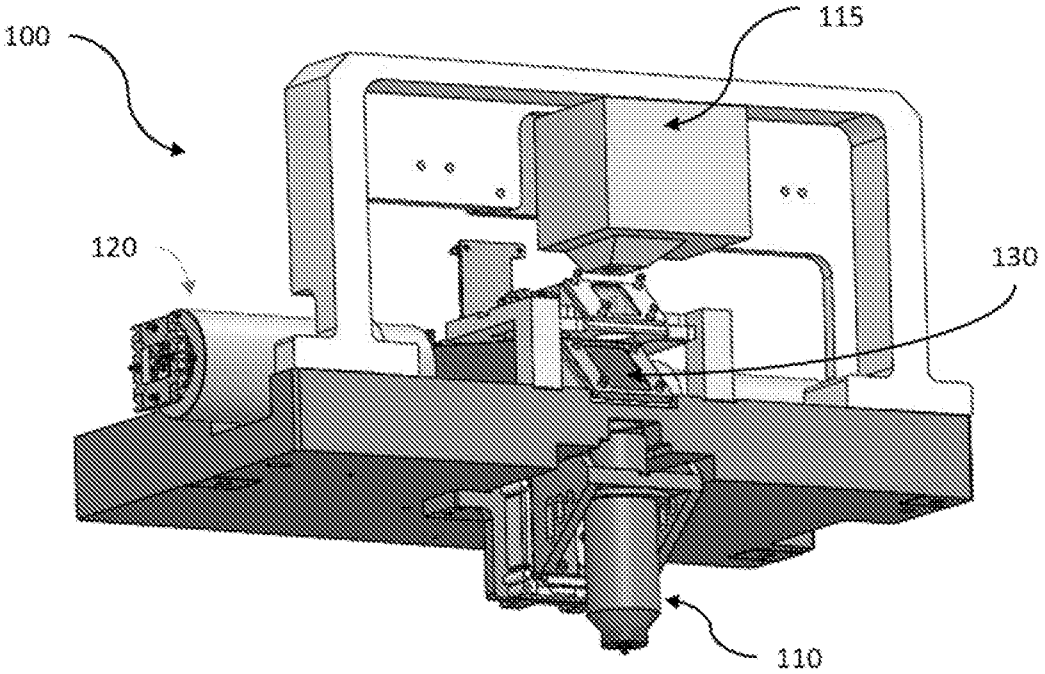


FIG. 2B

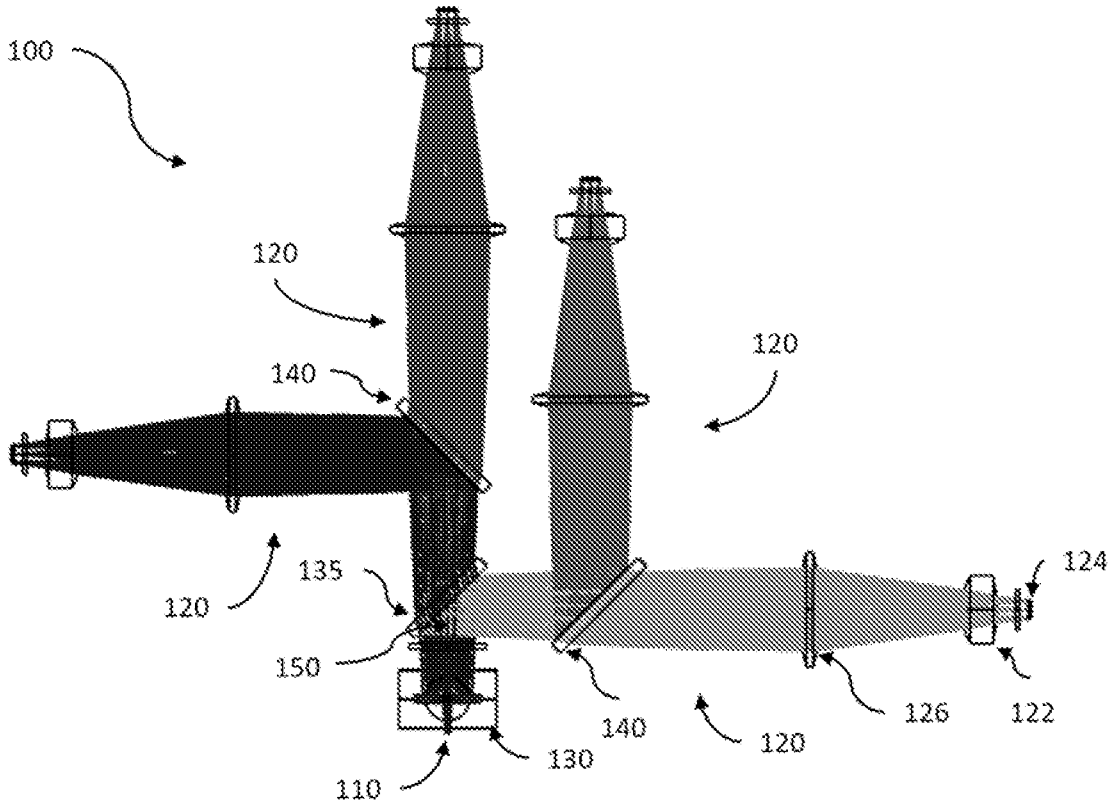
100
120
140
120
120
135
124
150
126
122
140
120
130
110

FIG. 3A

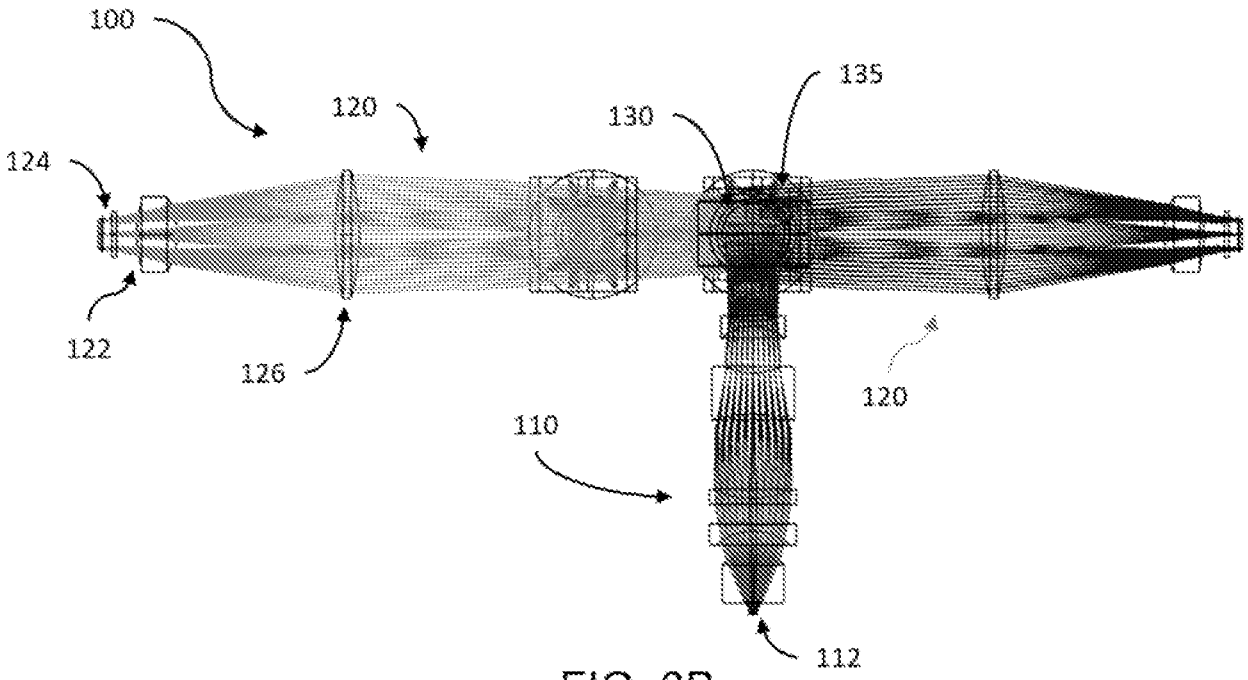
100
120
135
130
124
122
126
120
110
112

FIG. 3B

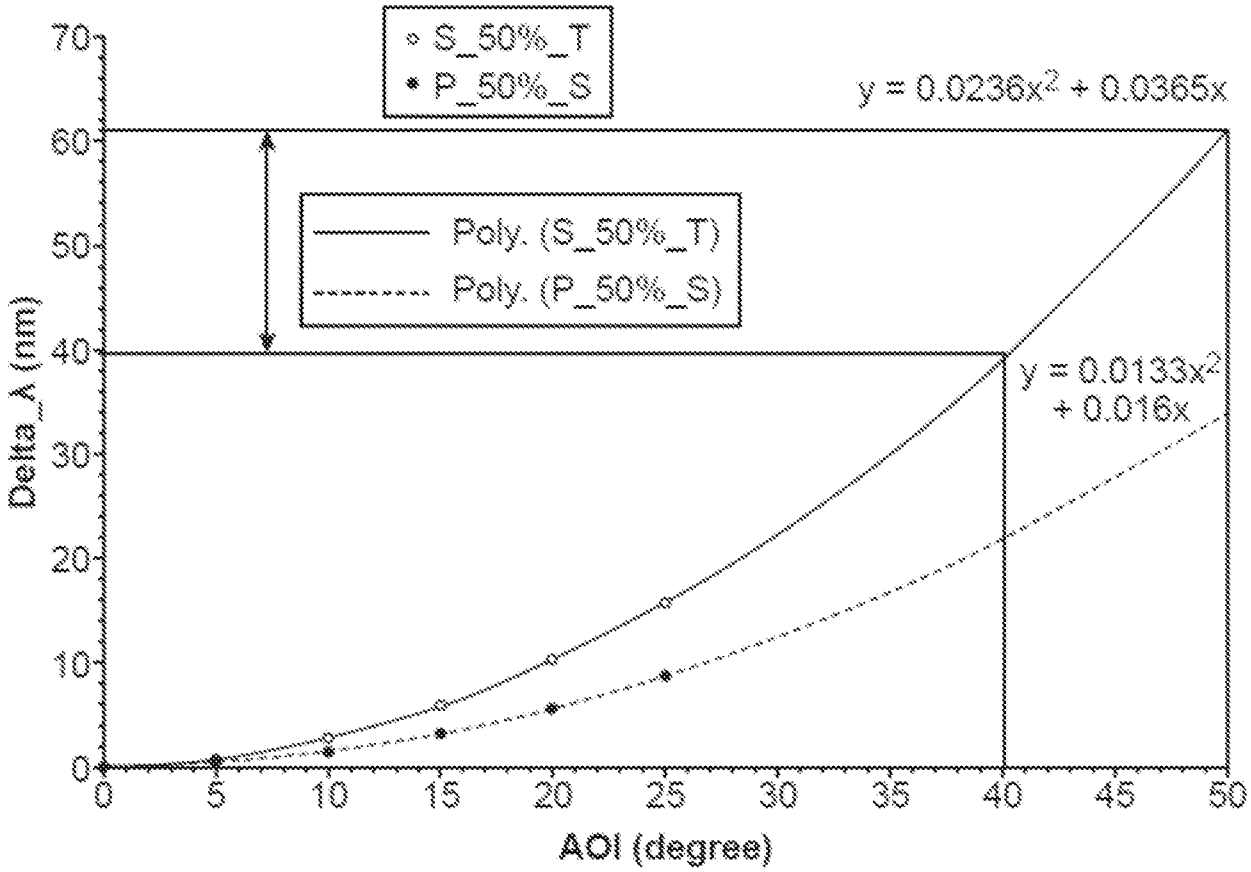
S_50%_T
P_50%_S
y = 0.0236x2 + 0.0365x
Poly. (S_50%_T)
Poly. (P_50%_S)
y = 0.0133x2 + 0.016x
Delta_A (nm)
AOI (degree)
0
10
20
30
40
50
60
70
0
5
10
15
20
25
30
35
40
45
50

FIG. 4

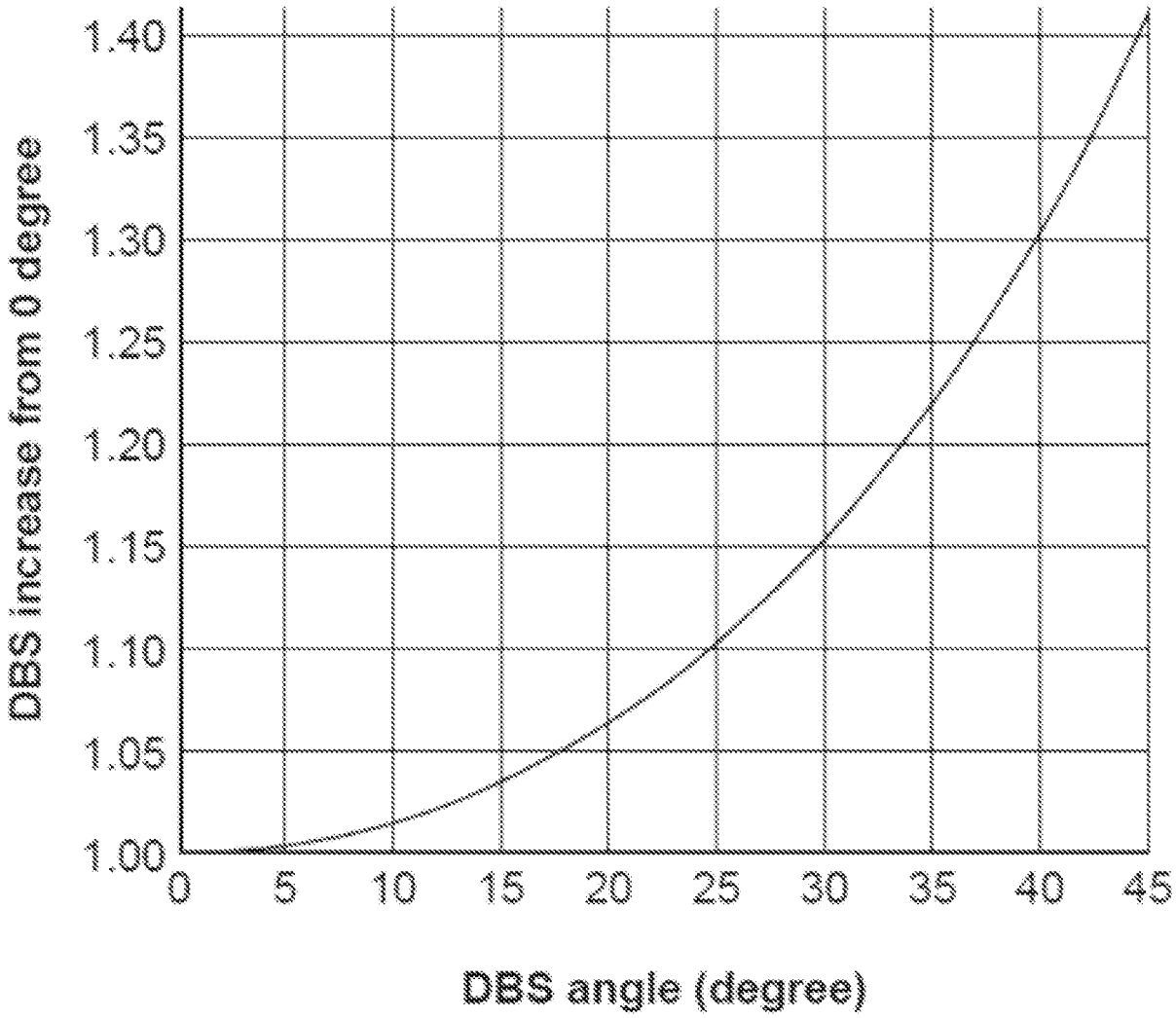
DBS increase from 0 degree
1.40
1.35
1.30
1.25
1.20
1.15
1.10
1.05
1.00
0
5
10
15
20
25
30
35
40
45
DBS angle (degree)

FIG. 5

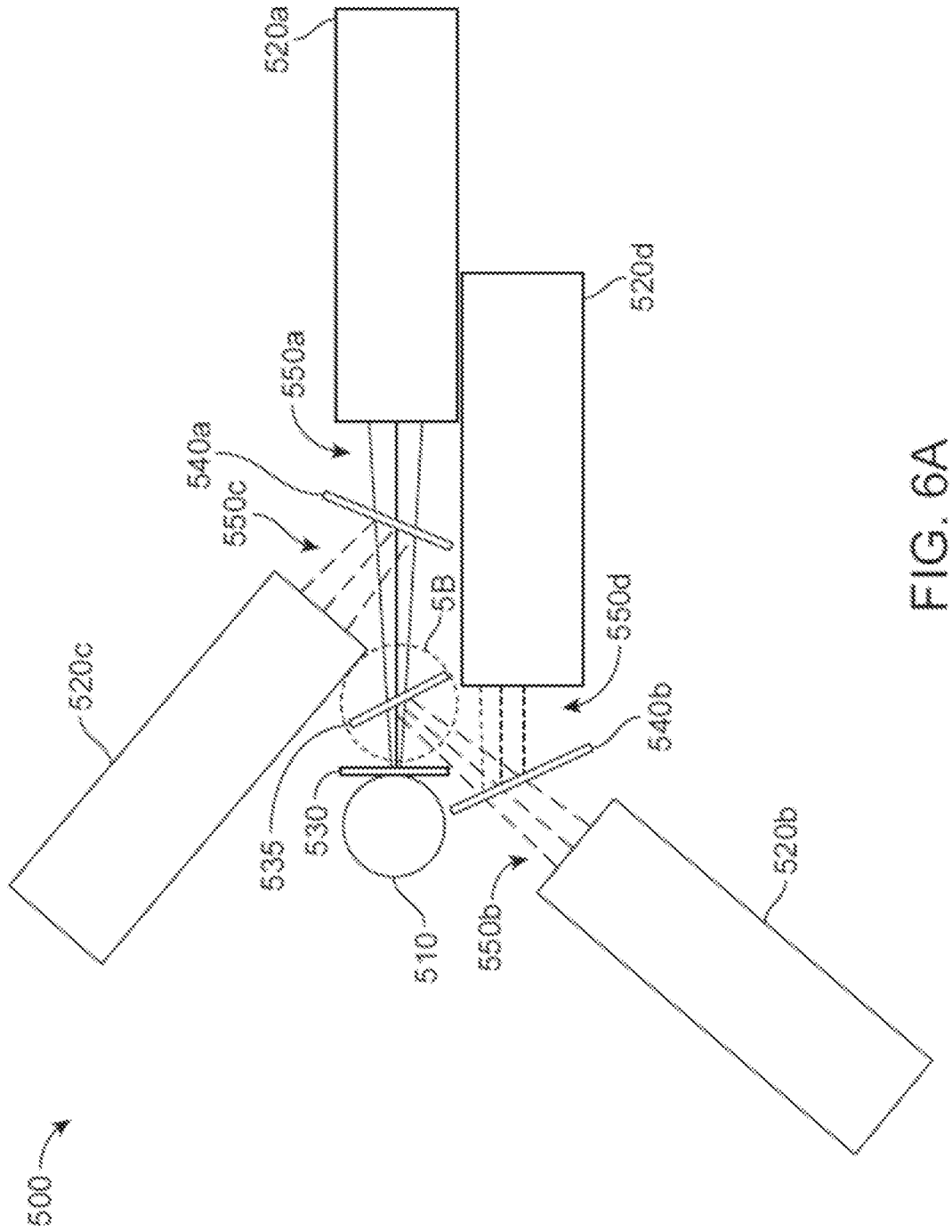


FIG. 6A

Sheet 6 of 48

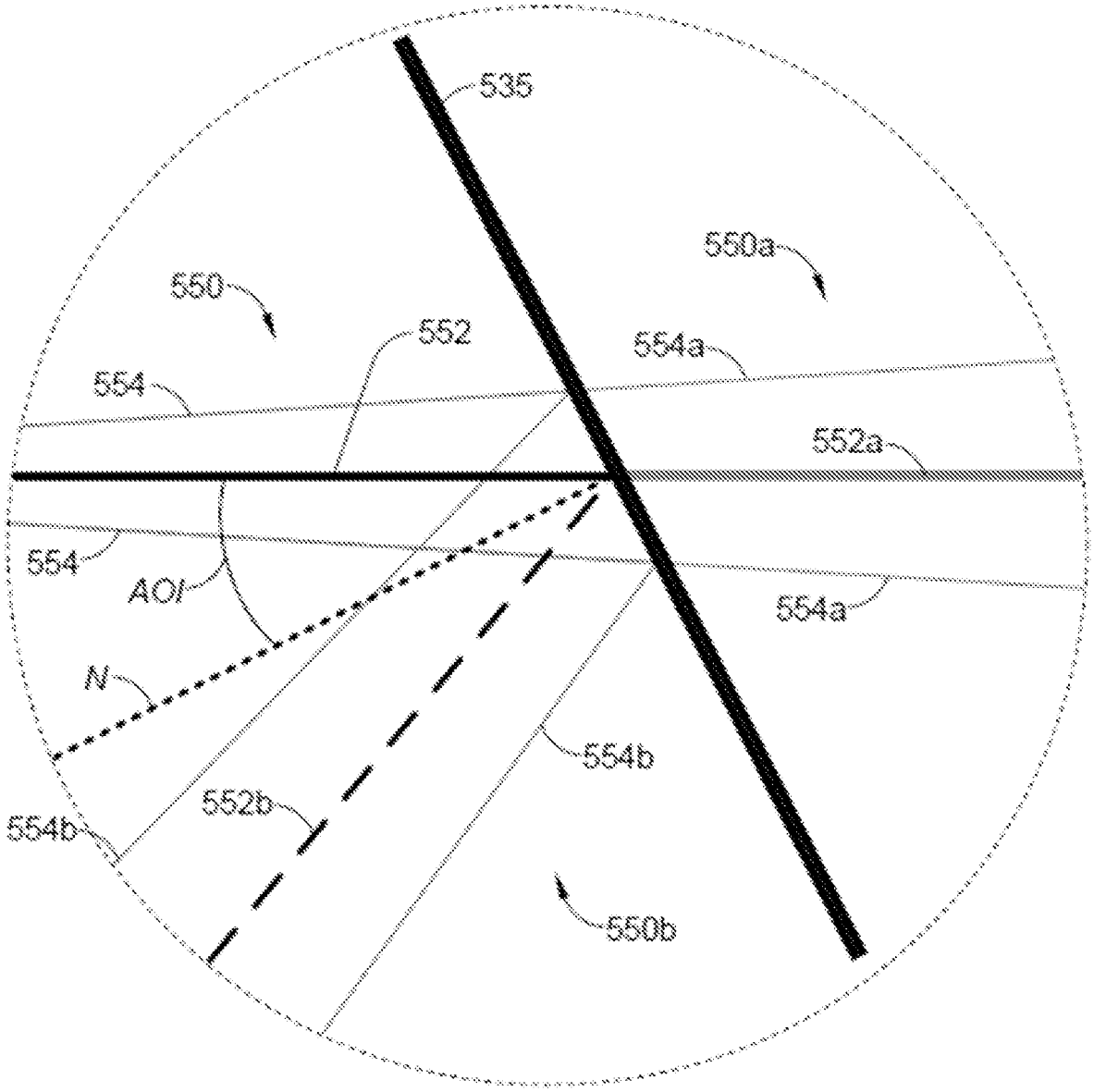
535
550a
550
552
554a
554
552a
554
AOI
554a
N
554b
552b
554b
550b

FIG. 6B

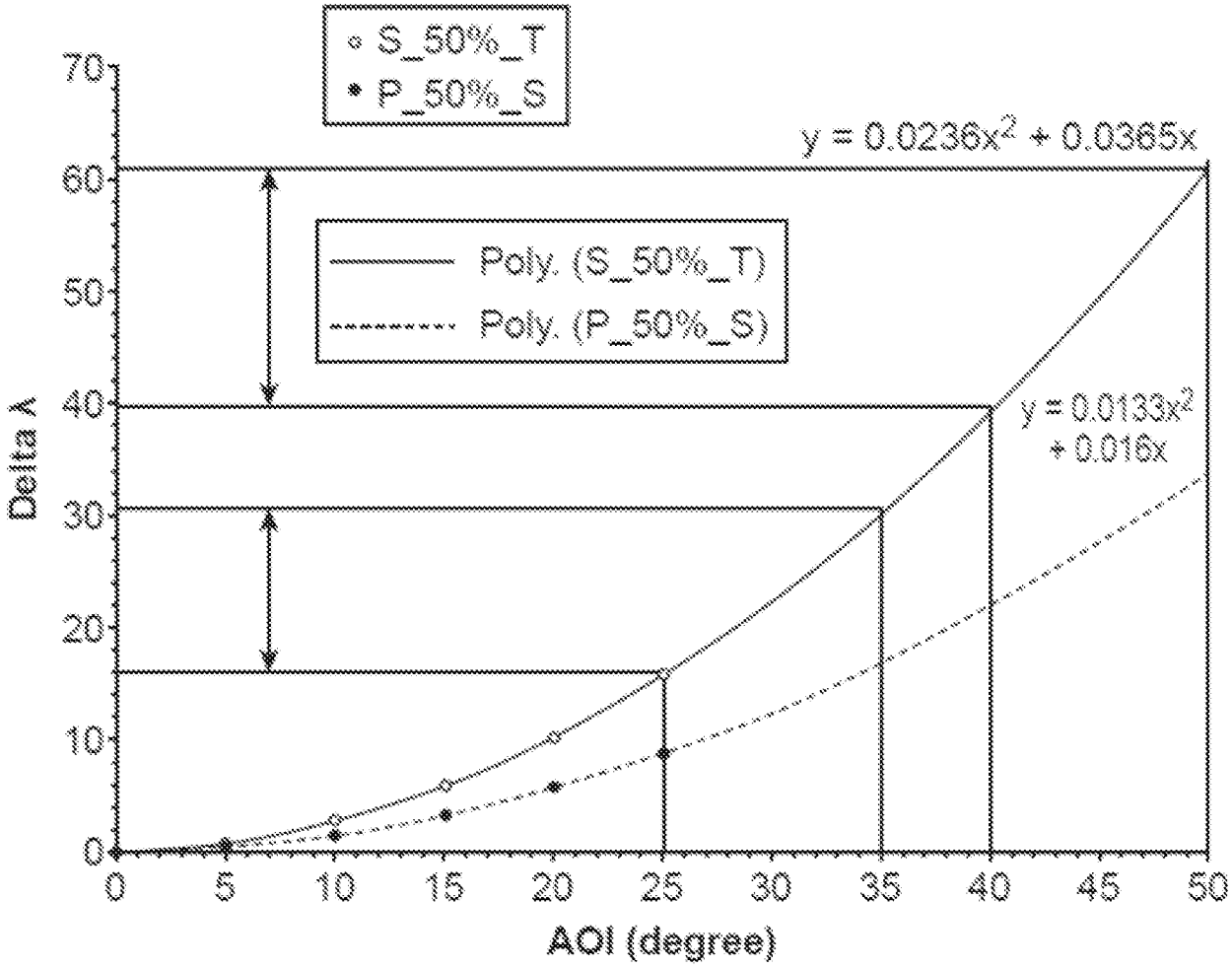
S_50%_T
P_50%_S
y = 0.0236x2 + 0.0365x
Poly. (S_50%_T)
Poly. (P_50%_S)
y = 0.0133x2 + 0.016x
Delta A
AOI (degree)
0
10
20
30
40
50
60
70
0
5
10
15
20
25
30
35
40
45
50

FIG. 7

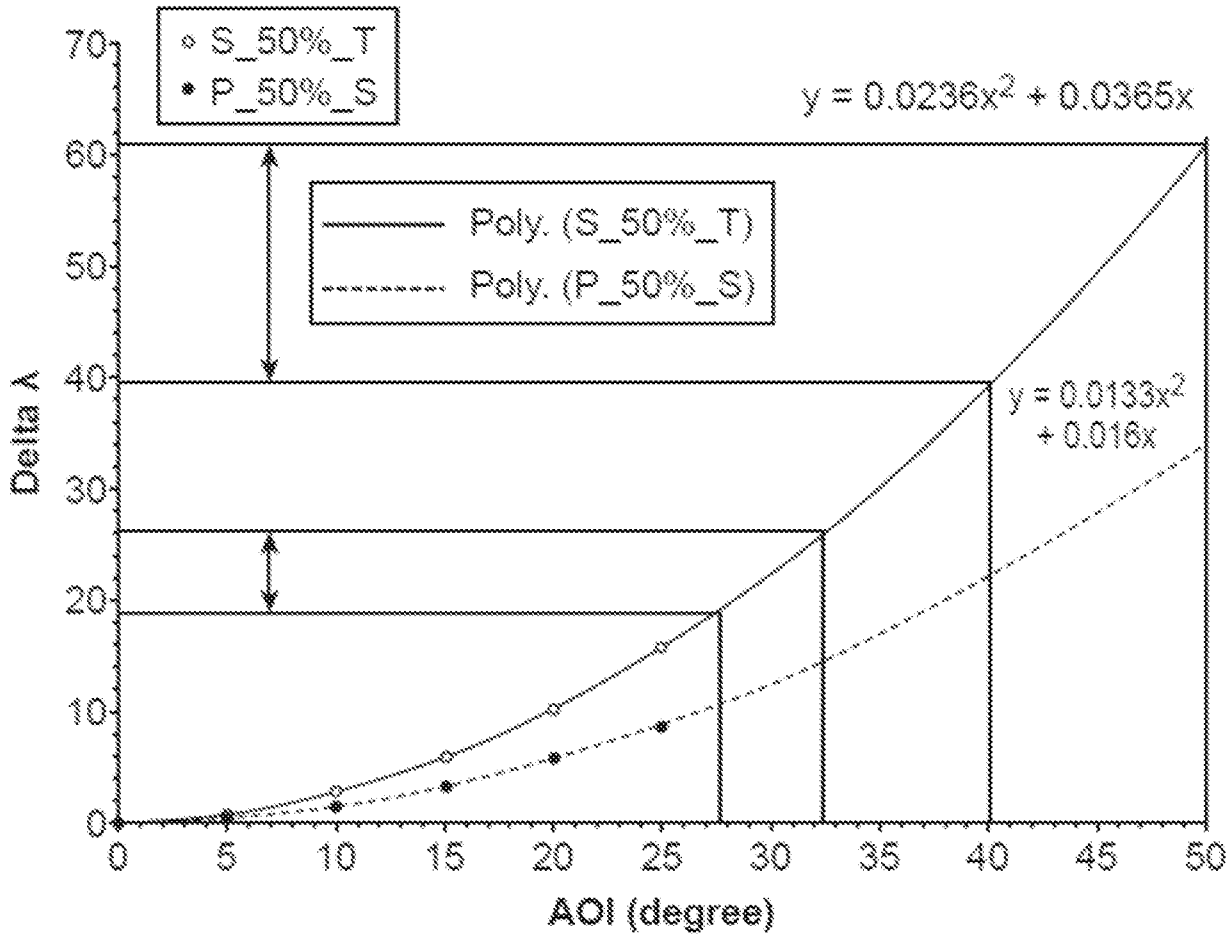
S_50%_T
P_50%_S
y = 0.0236x2 + 0.0365x
Poly. (S_50%_T)
Poly. (P_50%_S)
y = 0.0133x2 + 0.016x
Delta λ
AOI (degree)
0
10
20
30
40
50
60
70
0
5
10
15
20
25
30
35
40
45
50

FIG. 8

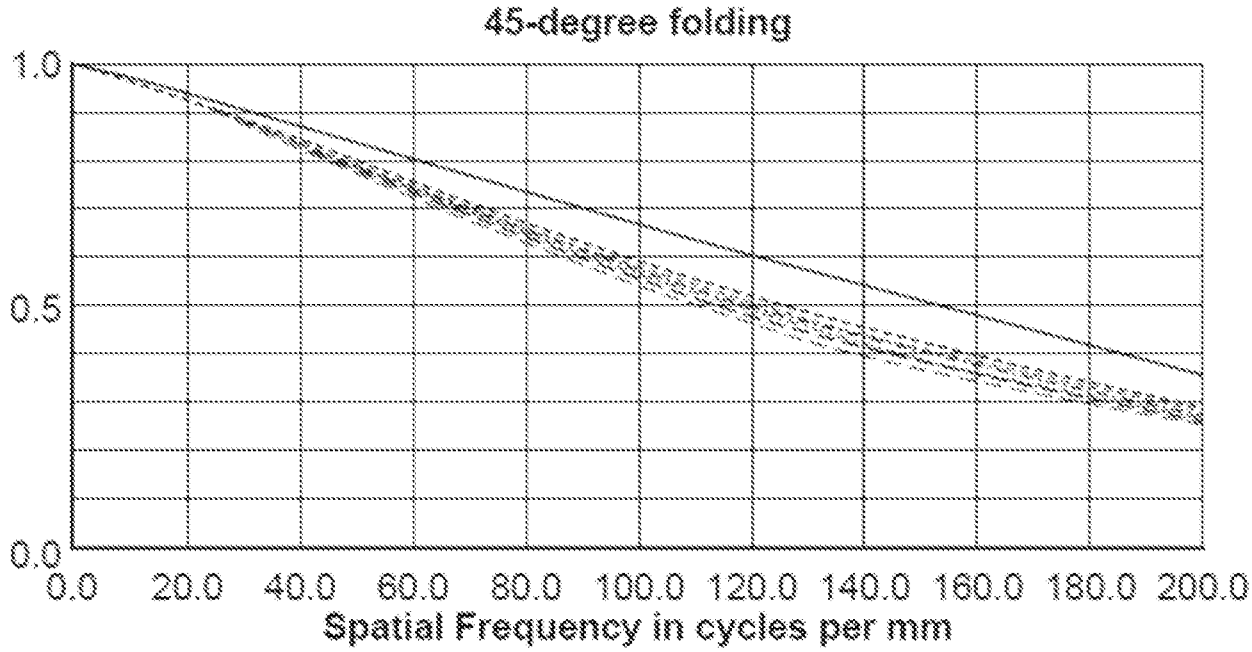
45-degree folding
1.0
0.5
0.0
0.0 20.0 40.0 60.0 80.0 100.0 120.0 140.0 160.0 180.0 200.0
Spatial Frequency in cycles per mm

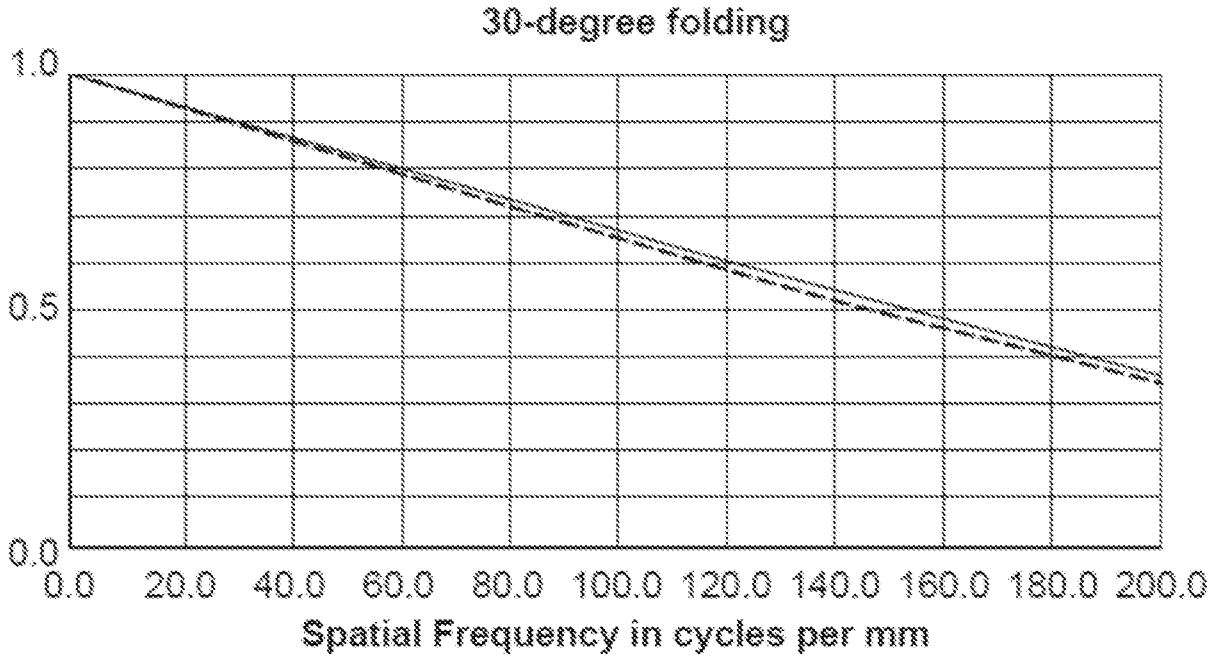
30-degree folding
1.0
0.5
0.0
0.0 20.0 40.0 60.0 80.0 100.0 120.0 140.0 160.0 180.0 200.0
Spatial Frequency in cycles per mm

FIG. 9A

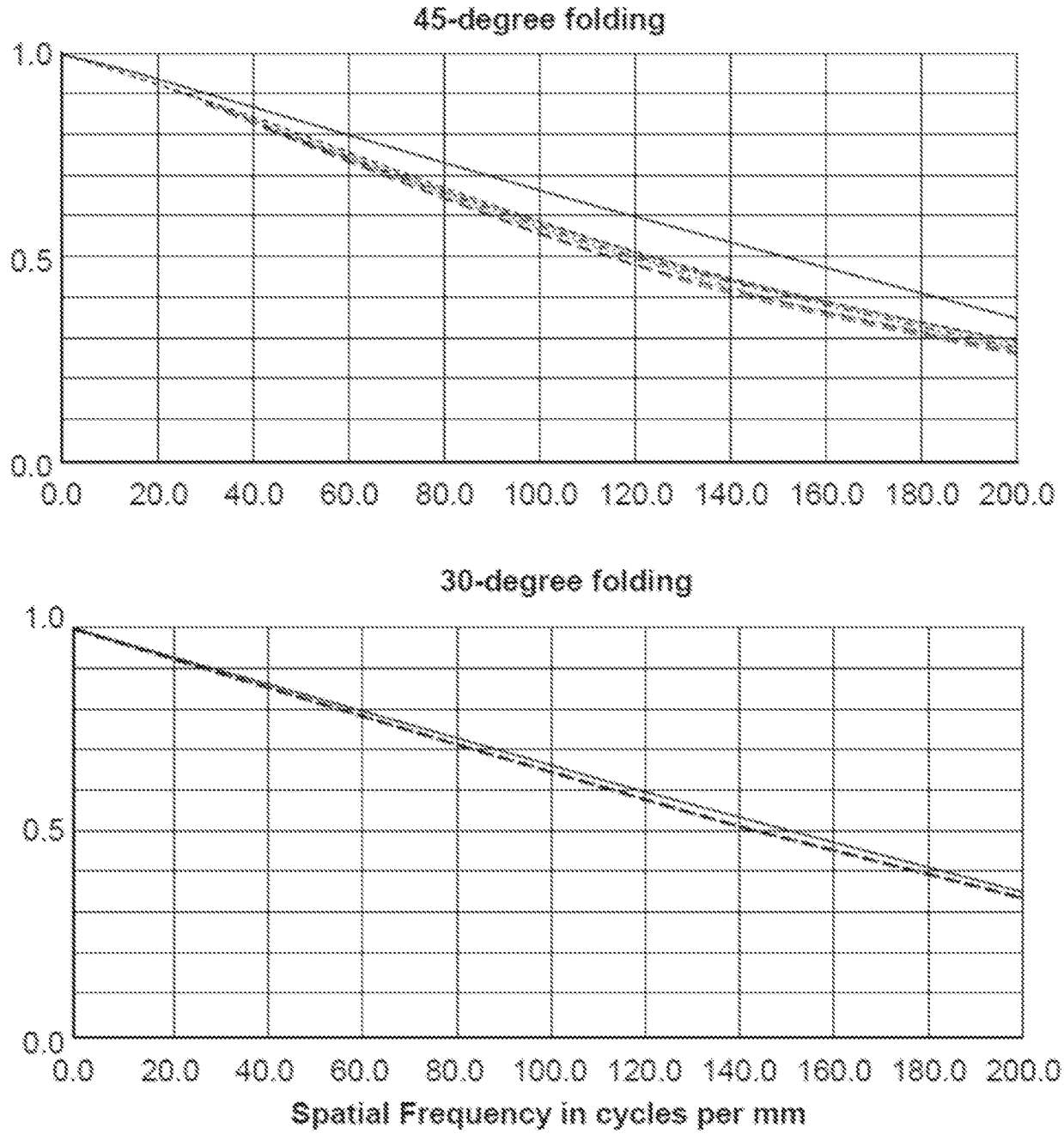
45-degree folding
1.0
0.5
0.0
0.0 20.0 40.0 60.0 80.0 100.0 120.0 140.0 160.0 180.0 200.0
30-degree folding
1.0
0.5
0.0
0.0 20.0 40.0 60.0 80.0 100.0 120.0 140.0 160.0 180.0 200.0
Spatial Frequency in cycles per mm

FIG. 9B

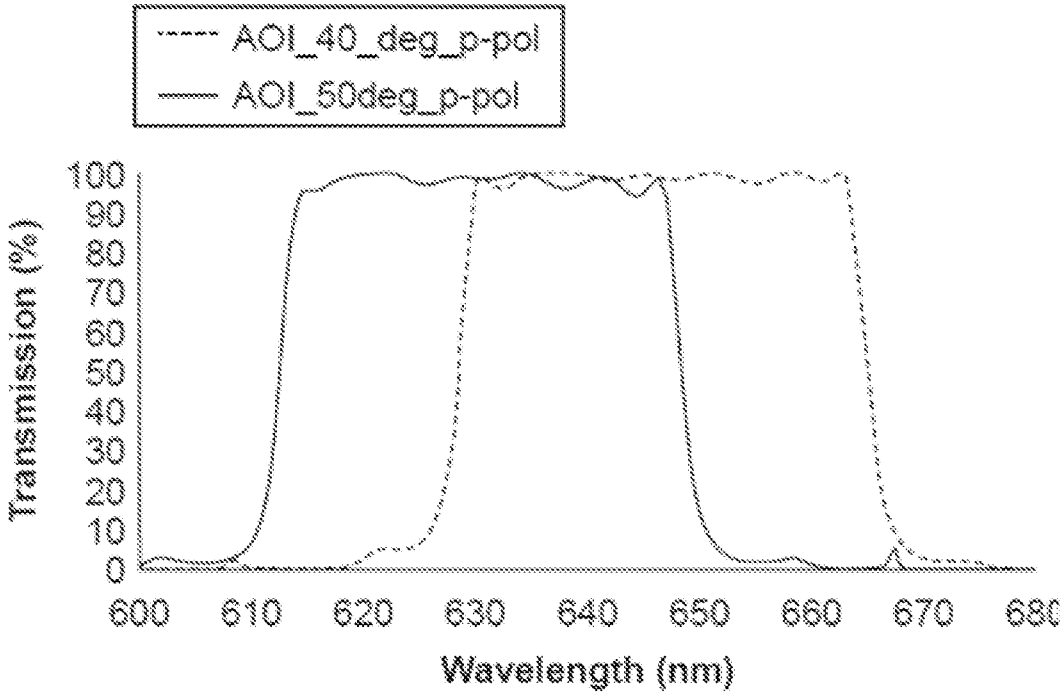


FIG. 10A

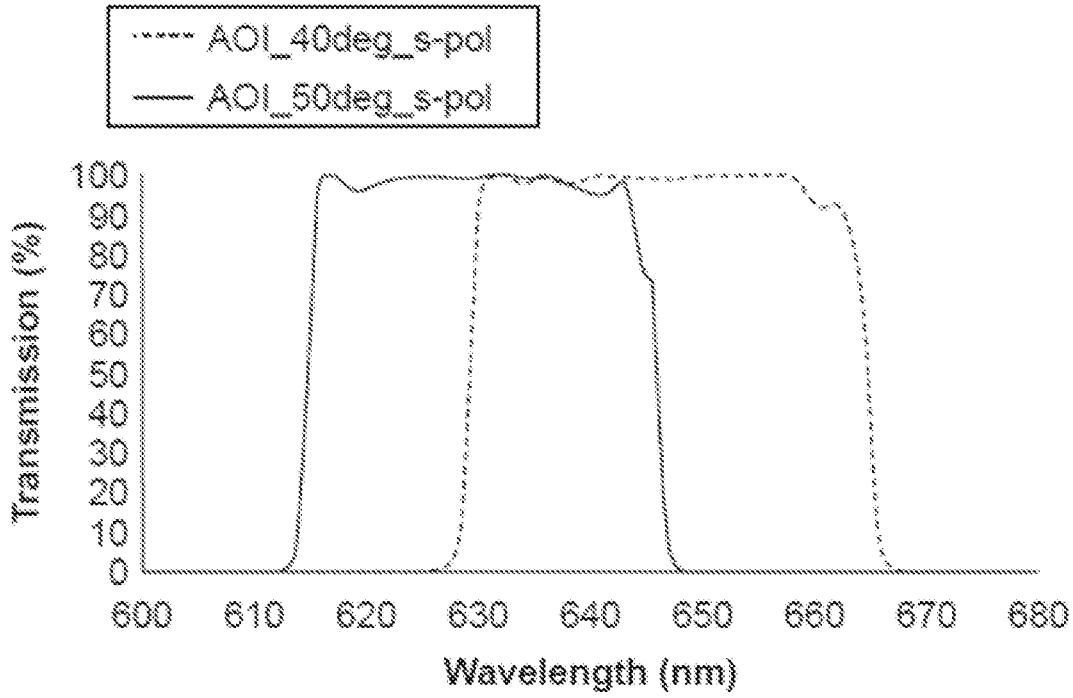


FIG. 10B

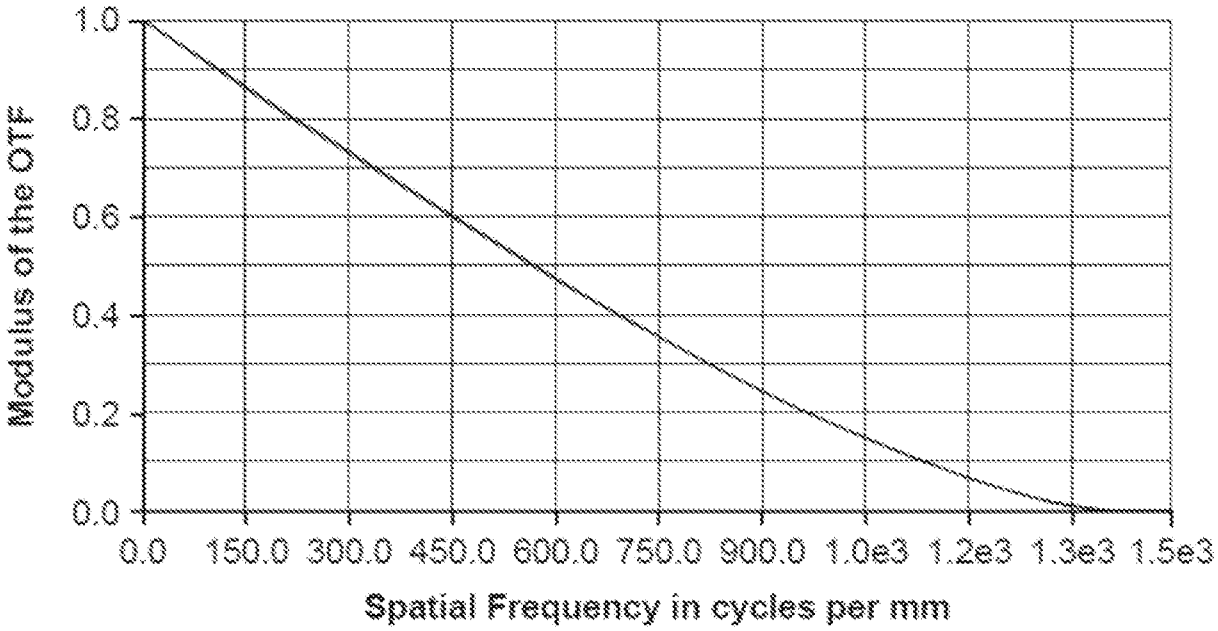


FIG. 11A

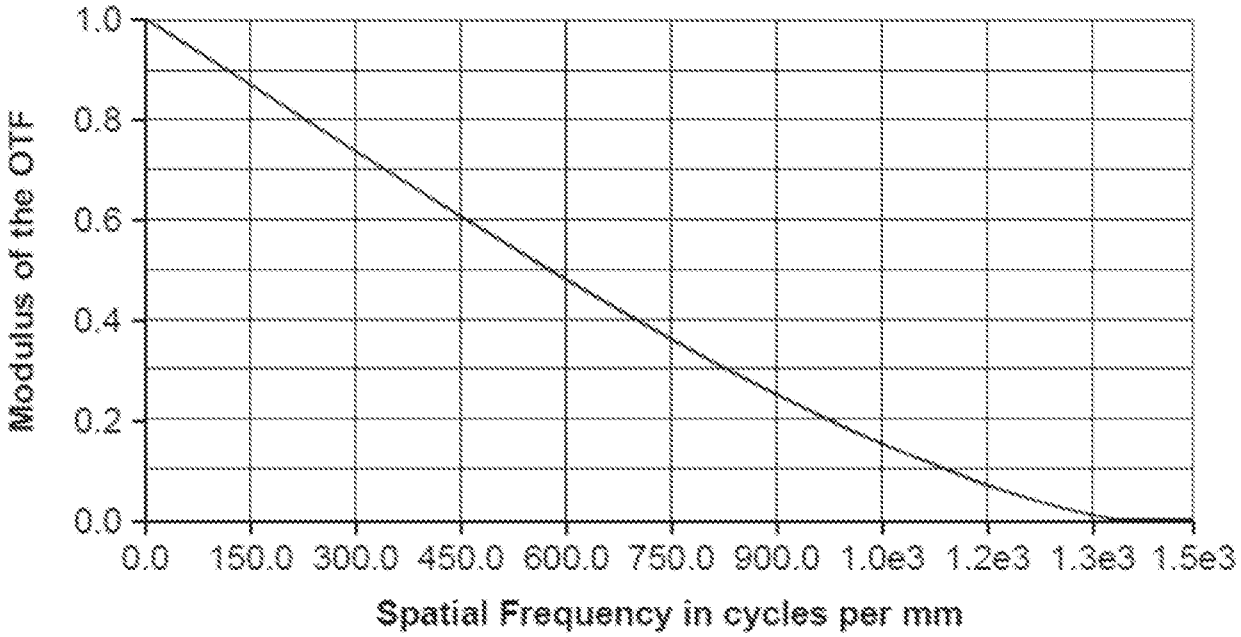


FIG. 11B

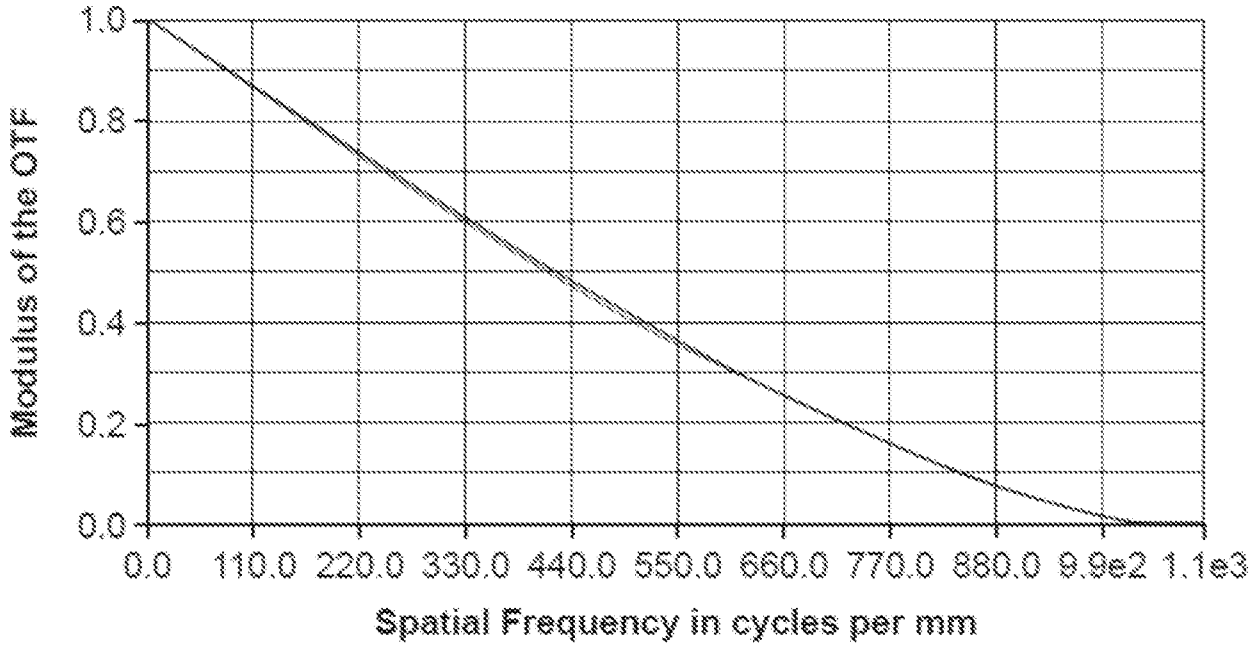


FIG. 12A

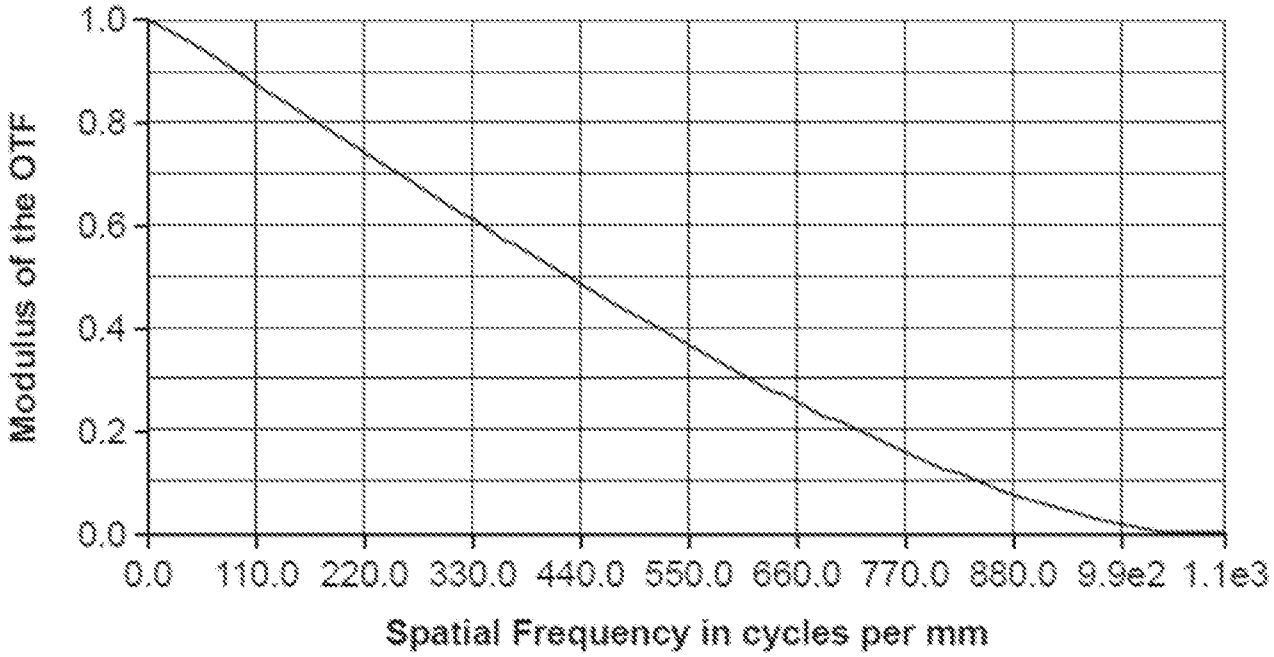


FIG. 12B

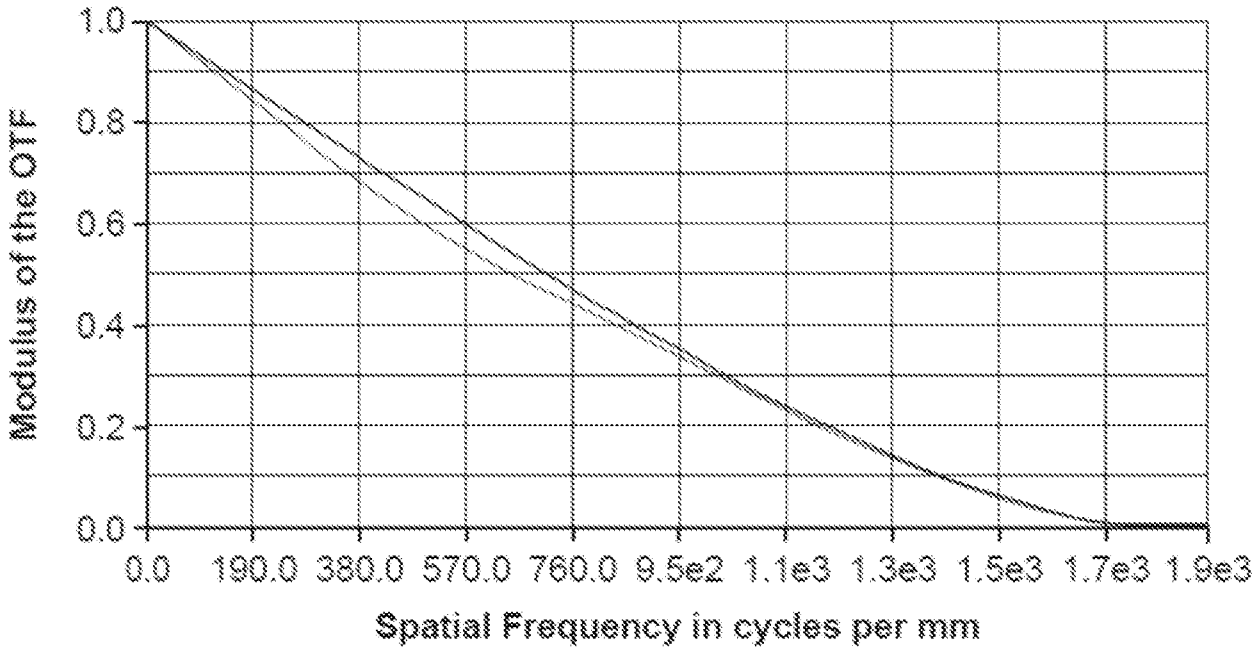


FIG. 13A

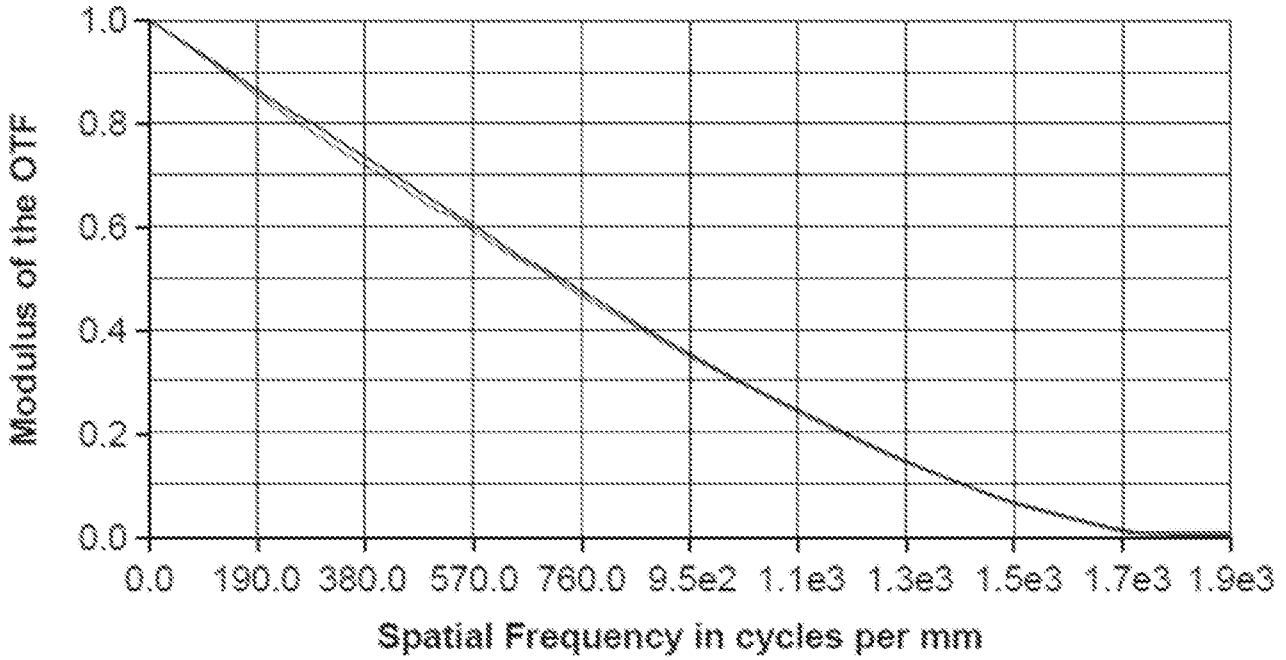


FIG. 13B

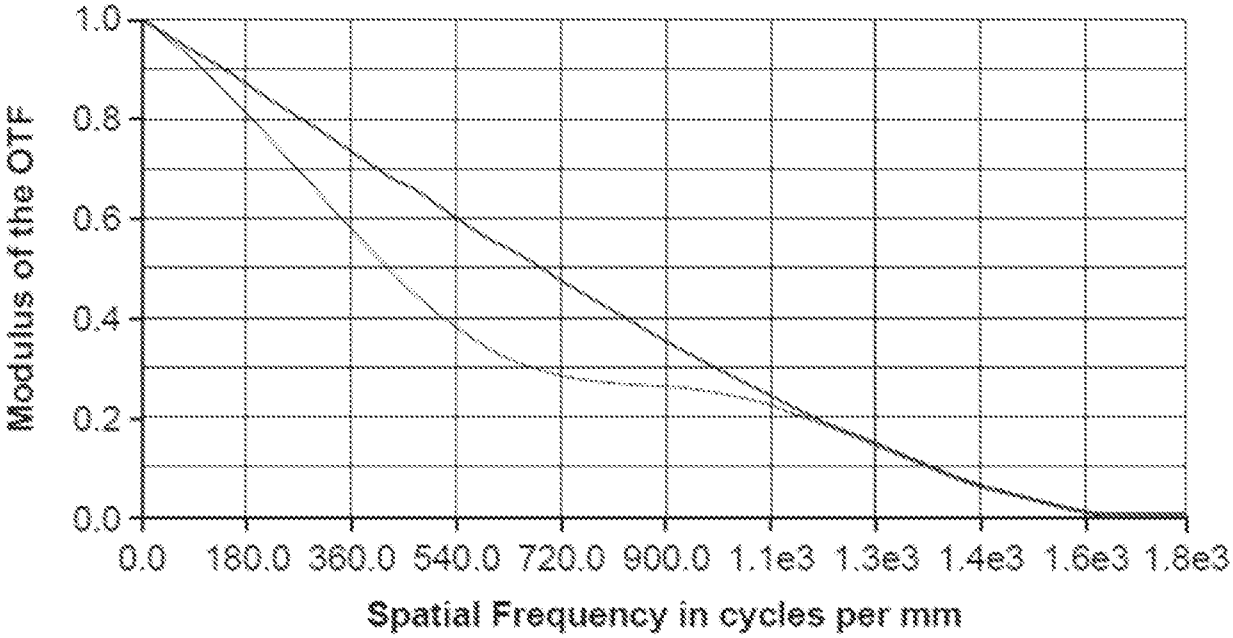


FIG. 14A

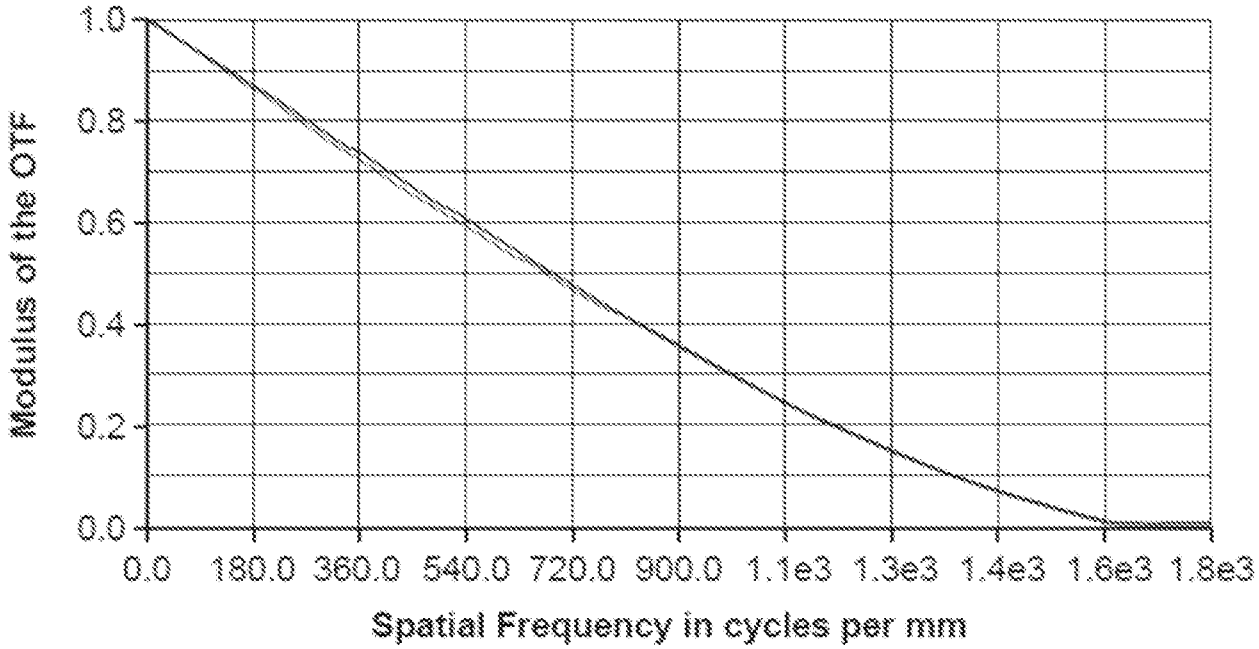


FIG. 14B

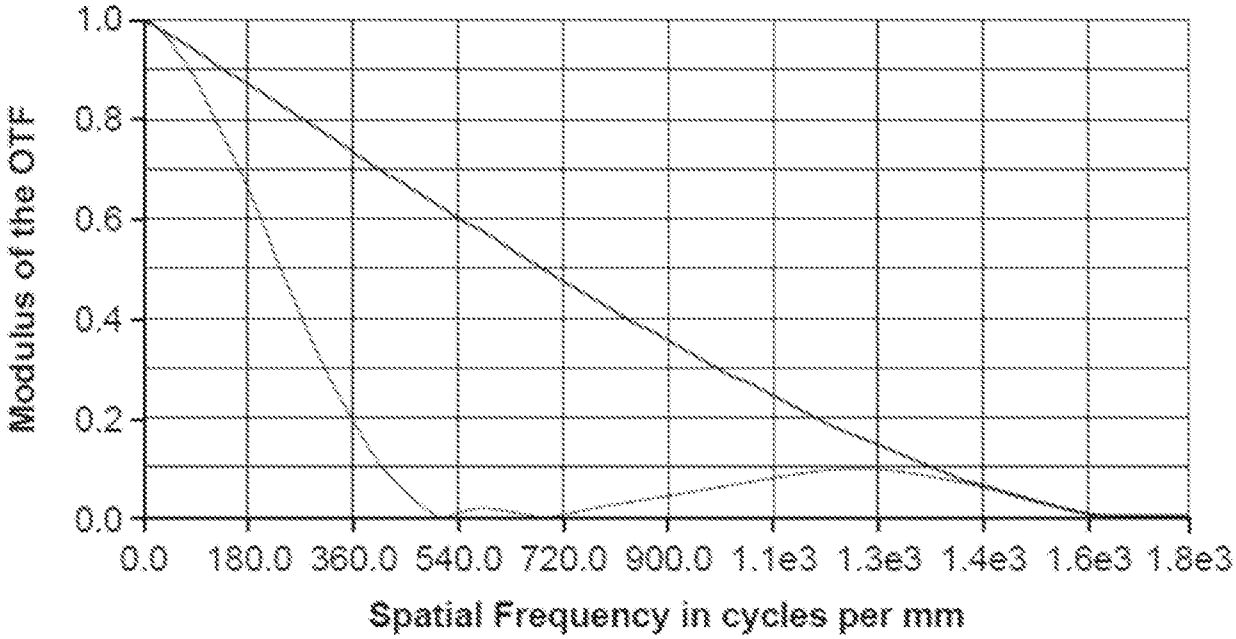


FIG. 15A

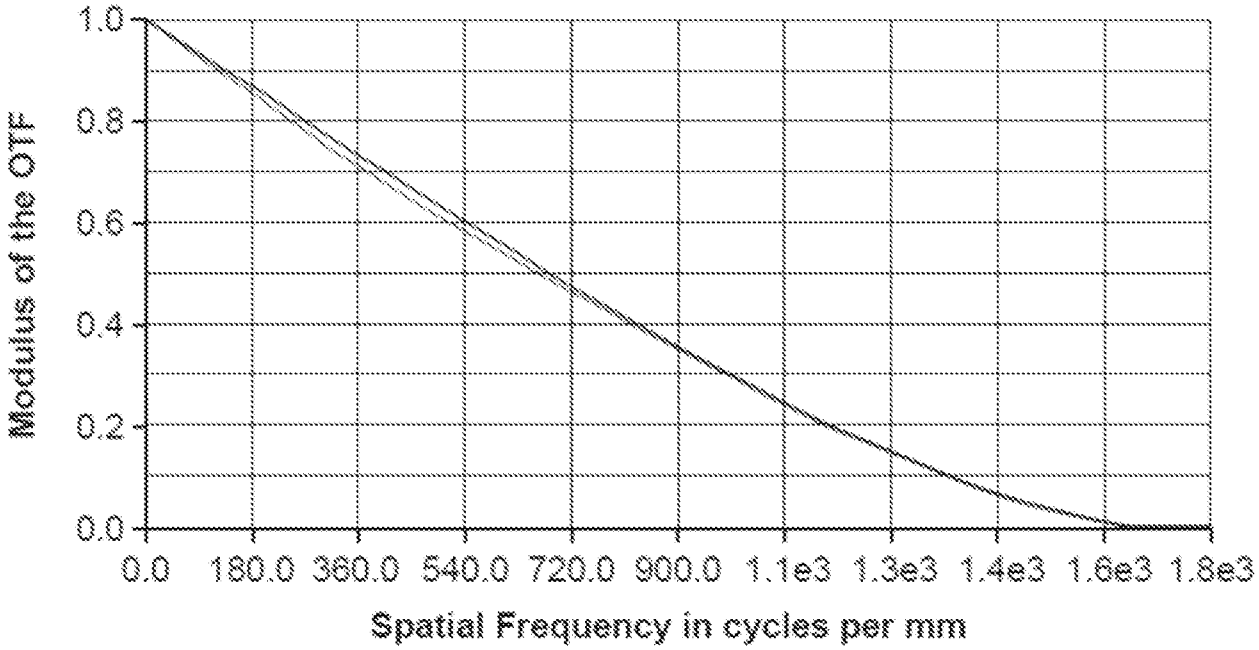


FIG. 15B

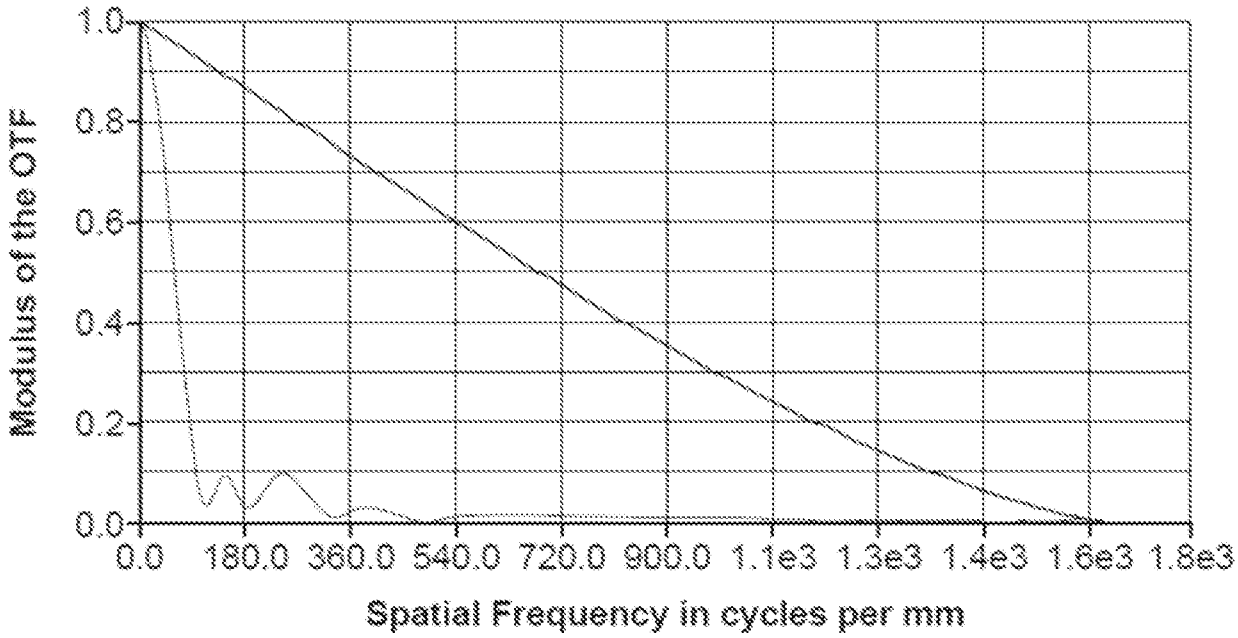


FIG. 16A

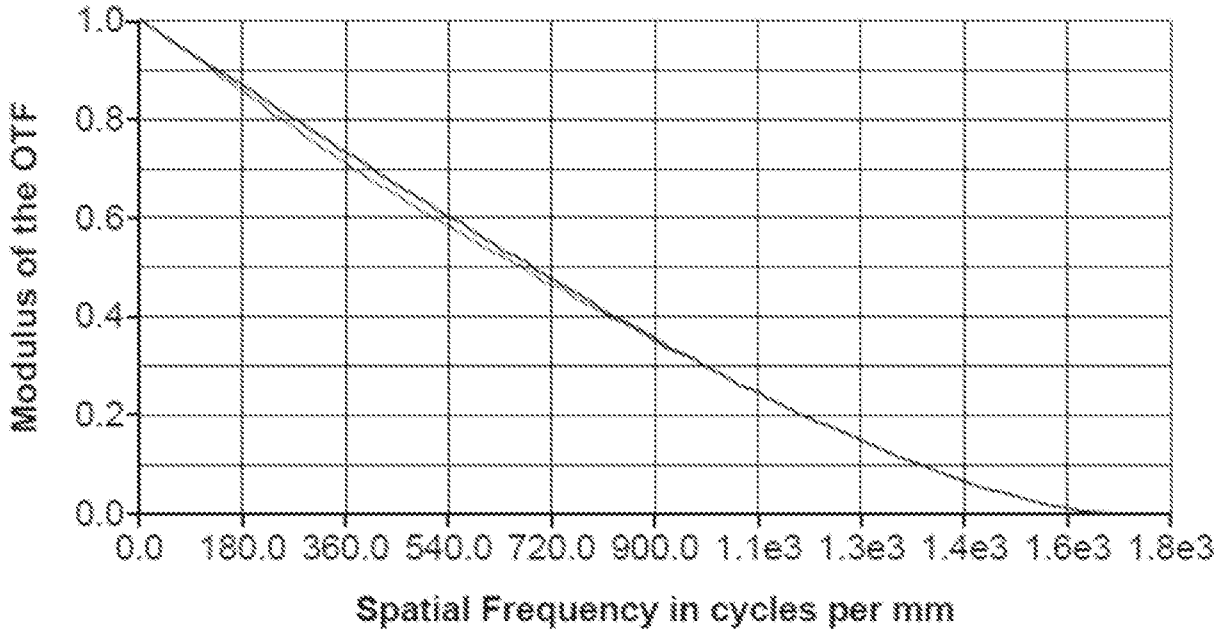


FIG. 16B

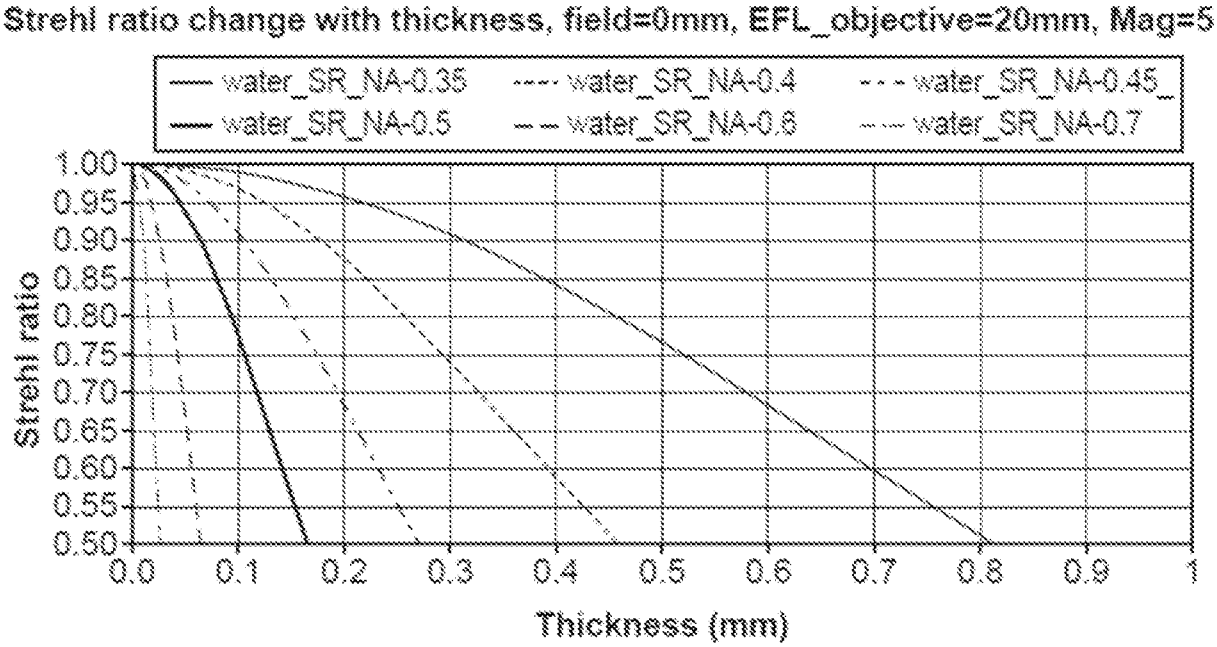


FIG. 17A

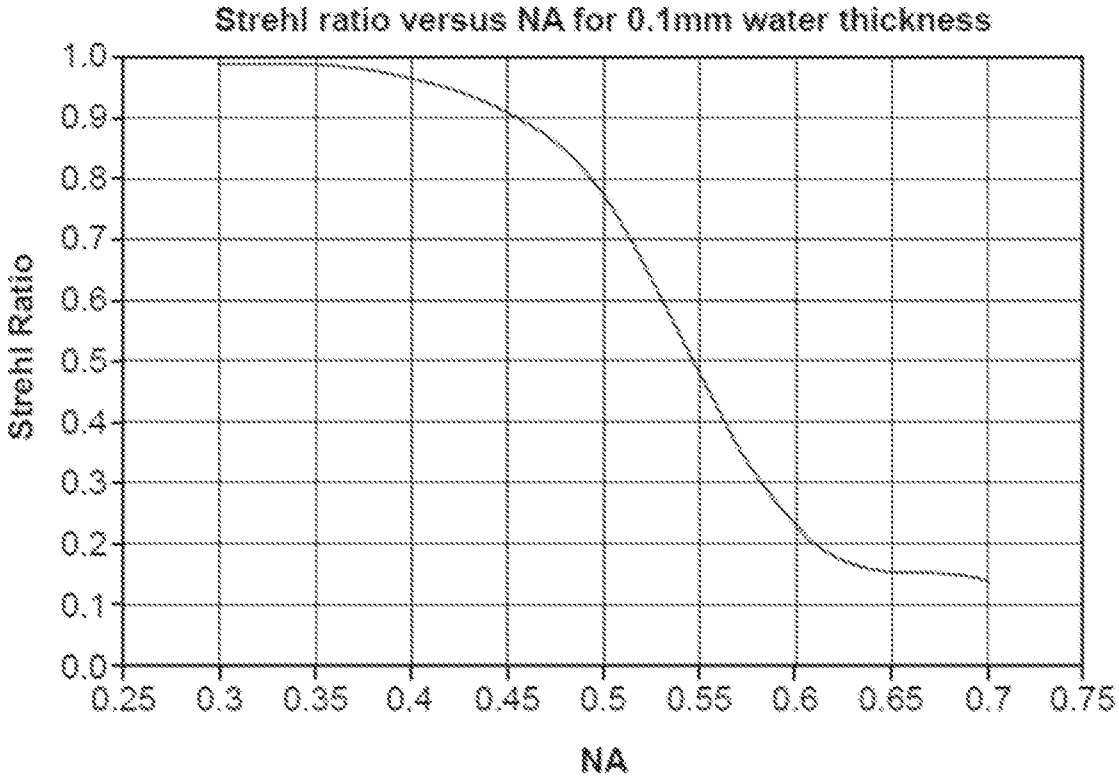


FIG. 17B

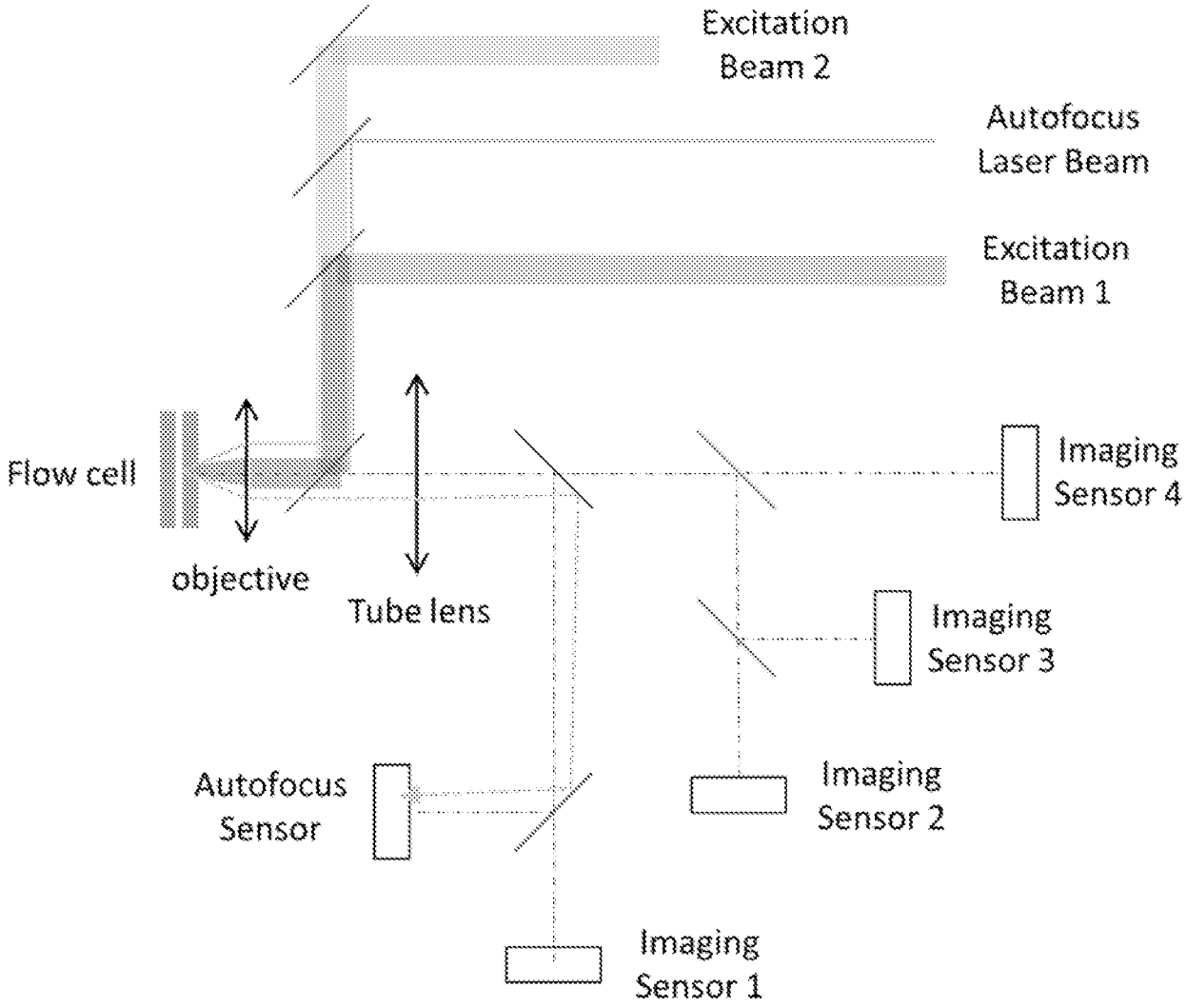
Excitation Beam 2
Autofocus Laser Beam
Excitation Beam 1
Flow cell
objective
Tube lens
Imaging Sensor 4
Imaging Sensor 3
Autofocus Sensor
Imaging Sensor 2
Imaging Sensor 1

FIG. 18

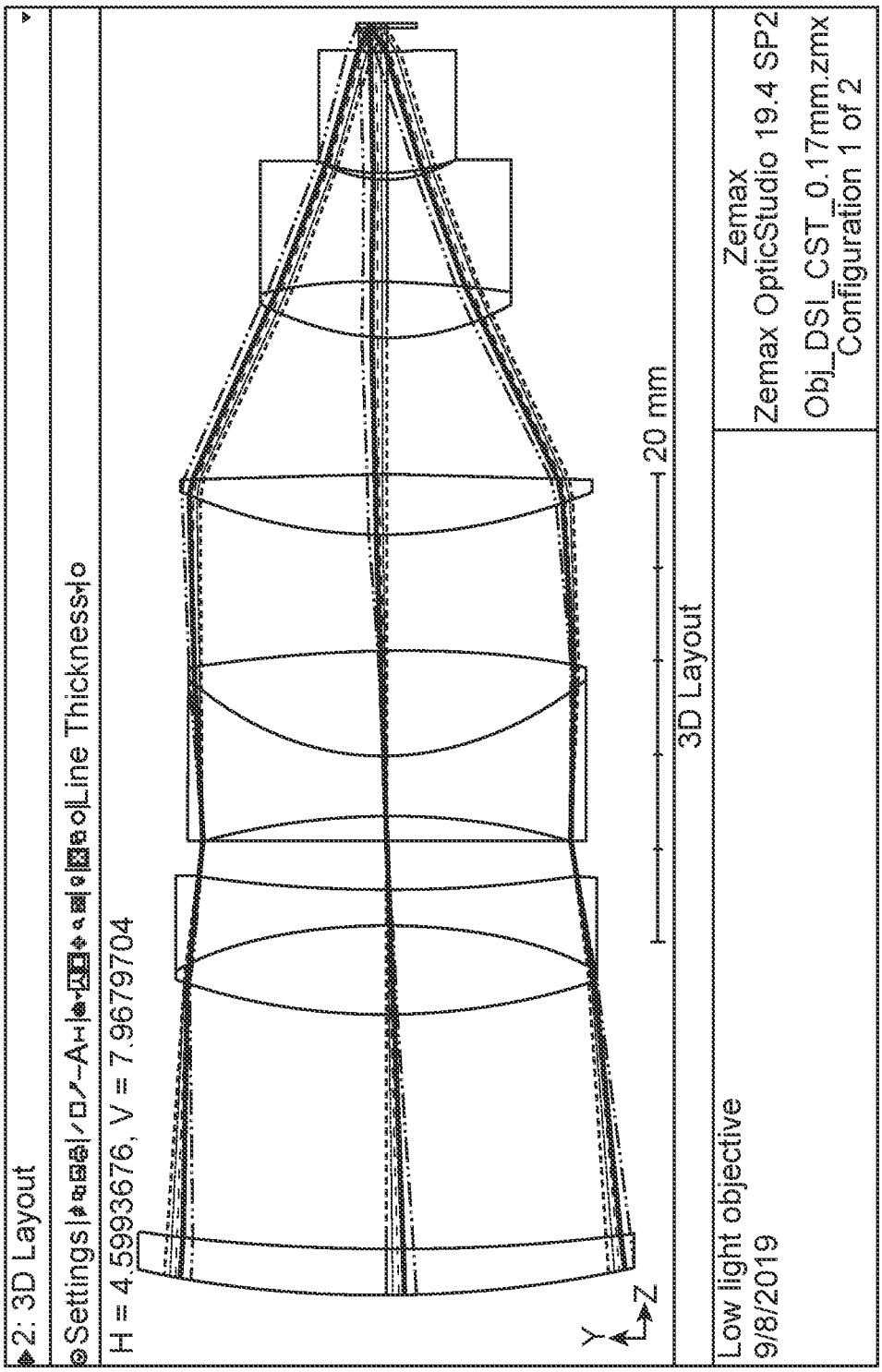
2: 3D Layout
Settings
Line Thickness
H = 4.5993676, V = 7.9679704
20 mm
Y
Z
3D Layout
Zemax
Zemax OpticStudio 19.4 SP2
Obj_DSI_CST_0.17mm.zmx
Configuration 1 of 2
Low light objective
9/8/2019

FIG. 19

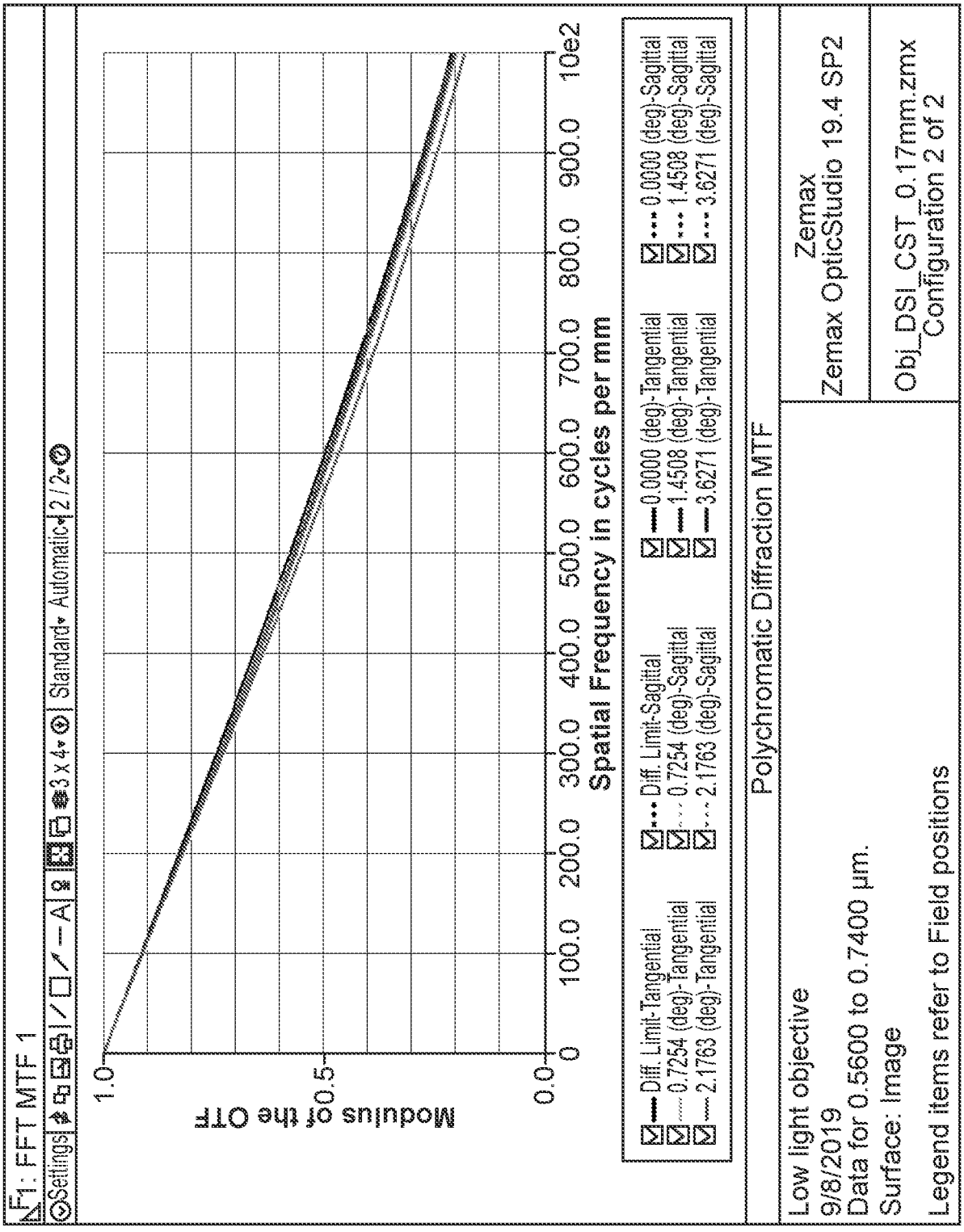
F1: FFT MTF 1
Settings
Standard
Automatic
2 / 2
3 x 4
Modulus of the OTF
1.0
0.5
0.0
0
100.0
200.0
300.0
400.0
500.0
600.0
700.0
800.0
900.0
10e2
Spatial Frequency in cycles per mm
Diff. Limit-Tangential
0.7254 (deg)-Tangential
2.1763 (deg)-Tangential
Diff. Limit-Sagittal
0.7254 (deg)-Sagittal
2.1763 (deg)-Sagittal
0.0000 (deg)-Tangential
1.4508 (deg)-Tangential
3.6271 (deg)-Tangential
0.0000 (deg)-Sagittal
1.4508 (deg)-Sagittal
3.6271 (deg)-Sagittal
Polychromatic Diffraction MTF
Low light objective
9/8/2019
Data for 0.5600 to 0.7400 µm.
Surface: Image
Legend items refer to Field positions
Zemax
Zemax OpticStudio 19.4 SP2
Obj_DSI_CST_0.17mm.zmx
Configuration 2 of 2

FIG. 20

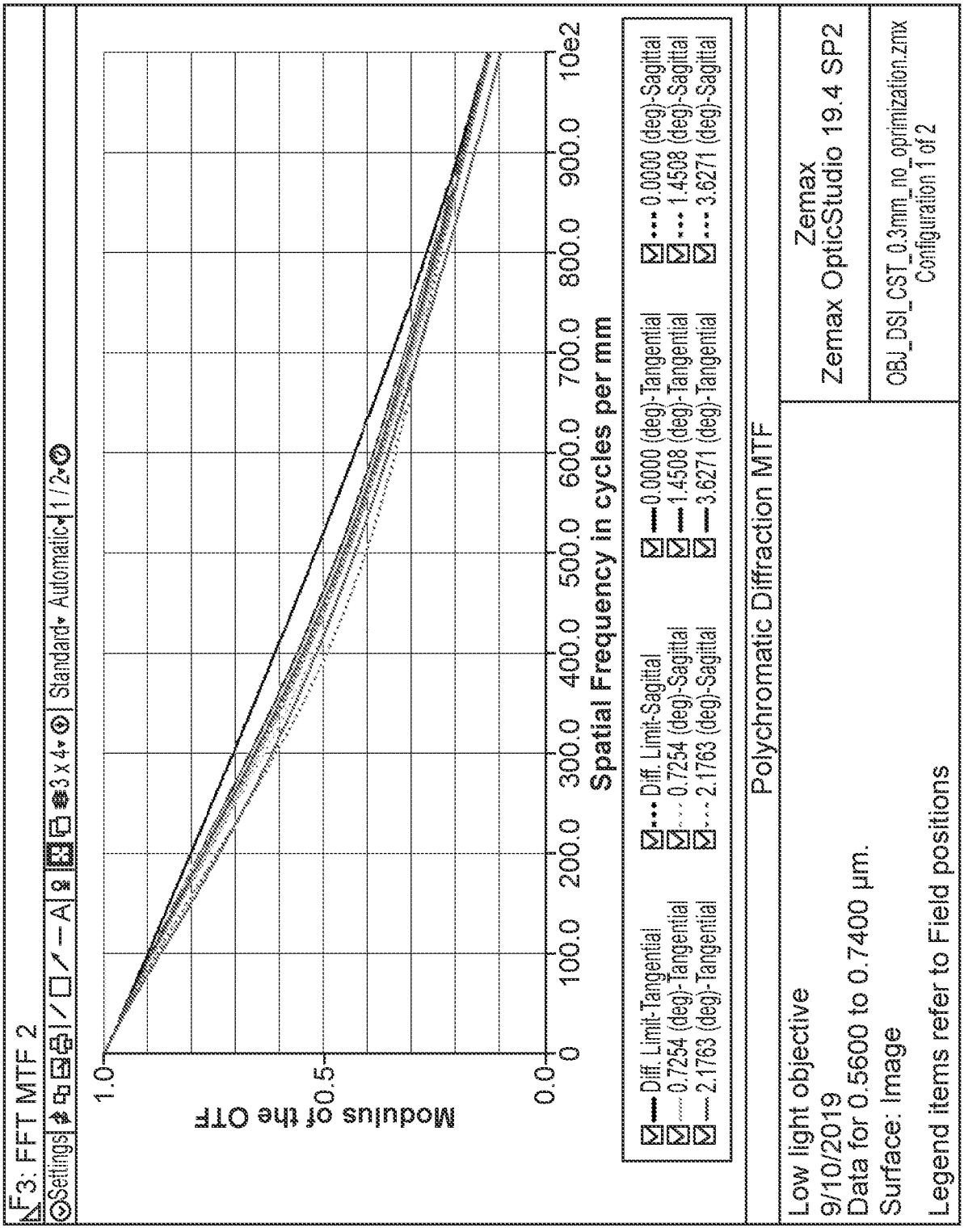
F3: FFT MTF 2
Settings
Standard
Automatic
1 / 2
3 x 4
Modulus of the OTF
1.0
0.5
0.0
0
100.0
200.0
300.0
400.0
500.0
600.0
700.0
800.0
900.0
10e2
Spatial Frequency in cycles per mm
Diff. Limit-Tangential
0.7254 (deg)-Tangential
2.1763 (deg)-Tangential
Diff. Limit-Sagittal
0.7254 (deg)-Sagittal
2.1763 (deg)-Sagittal
0.0000 (deg)-Tangential
1.4508 (deg)-Tangential
3.6271 (deg)-Tangential
0.0000 (deg)-Sagittal
1.4508 (deg)-Sagittal
3.6271 (deg)-Sagittal
Polychromatic Diffraction MTF
Zemax
Zemax OpticStudio 19.4 SP2
Low light objective
9/10/2019
Data for 0.5600 to 0.7400 µm.
Surface: Image
OBJ_DSI_CST_0.3mm_no_oprimization.zmx
Configuration 1 of 2
Legend items refer to Field positions

FIG. 21

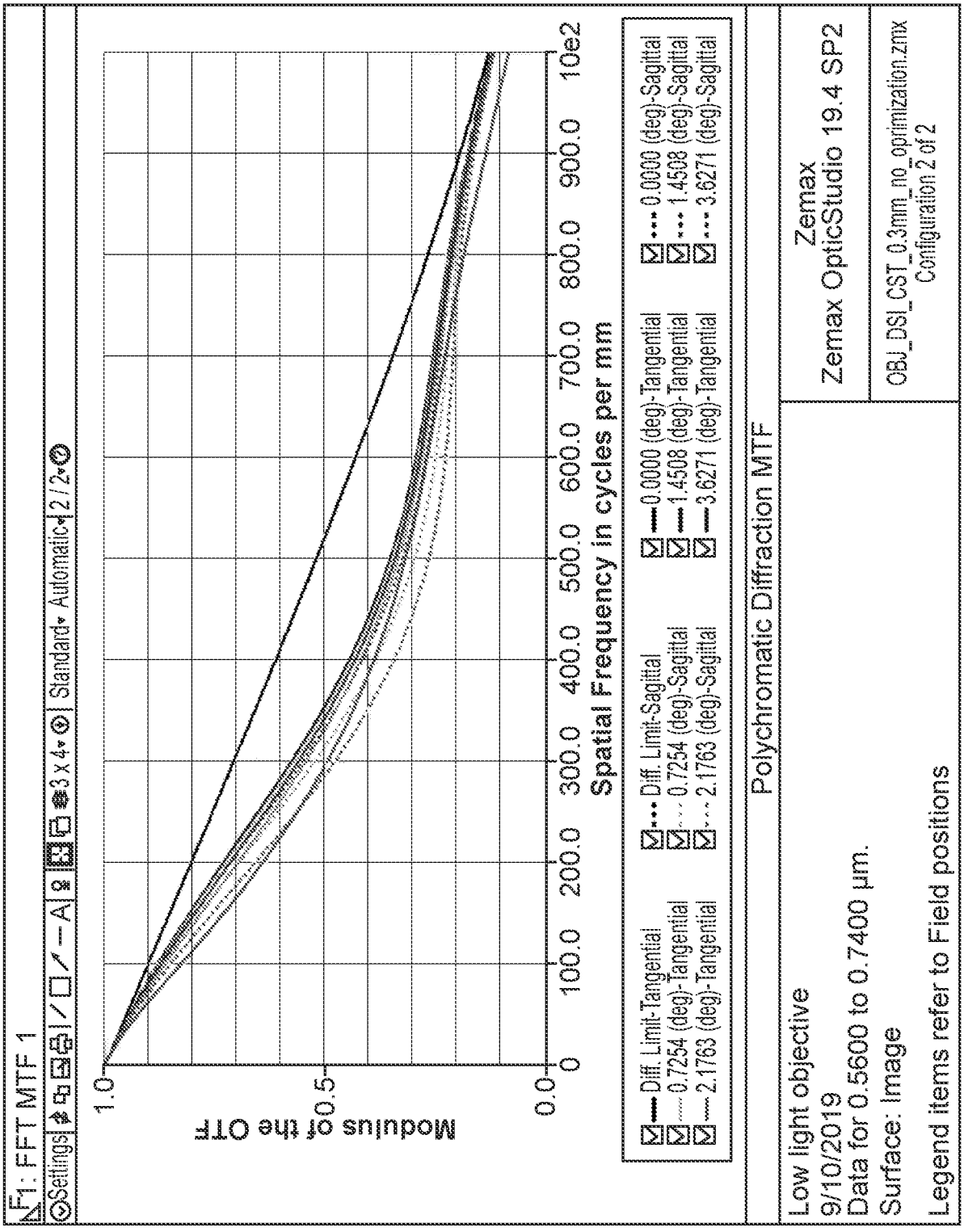
F1: FFT MTF 1
Settings
Standard
Automatic
2 / 2
Modulus of the OTF
1.0
0.5
0.0
0
100.0
200.0
300.0
400.0
500.0
600.0
700.0
800.0
900.0
10e2
Spatial Frequency in cycles per mm
Diff. Limit-Tangential
0.7254 (deg)-Tangential
2.1763 (deg)-Tangential
Diff. Limit-Sagittal
0.7254 (deg)-Sagittal
2.1763 (deg)-Sagittal
0.0000 (deg)-Tangential
1.4508 (deg)-Tangential
3.6271 (deg)-Tangential
0.0000 (deg)-Sagittal
1.4508 (deg)-Sagittal
3.6271 (deg)-Sagittal
Polychromatic Diffraction MTF
Zemax
Zemax OpticStudio 19.4 SP2
Low light objective
9/10/2019
Data for 0.5600 to 0.7400 µm.
Surface: Image
Legend items refer to Field positions
OBJ_DSI_CST_0.3mm_no_oprimization.zmx
Configuration 2 of 2

FIG. 22

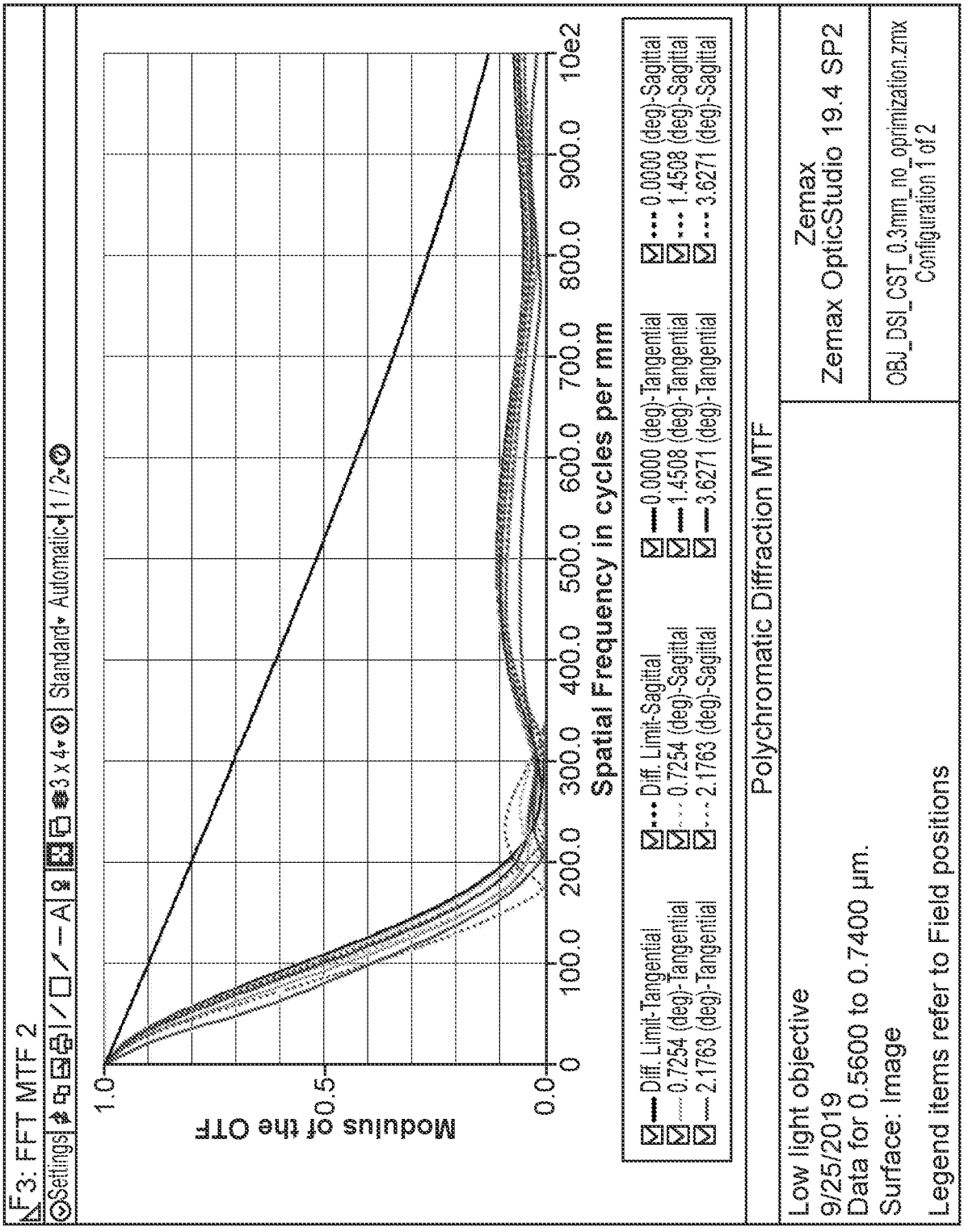
F3: FFT MTF 2
Settings
Standard
Automatic
1.0
0.5
0.0
Modulus of the OTF
0
100.0
200.0
300.0
400.0
500.0
600.0
700.0
800.0
900.0
10e2
Spatial Frequency in cycles per mm
Diff. Limit-Tangential
0.7254 (deg)-Tangential
2.1763 (deg)-Tangential
Diff. Limit-Sagittal
0.7254 (deg)-Sagittal
2.1763 (deg)-Sagittal
0.0000 (deg)-Tangential
1.4508 (deg)-Tangential
3.6271 (deg)-Tangential
0.0000 (deg)-Sagittal
1.4508 (deg)-Sagittal
3.6271 (deg)-Sagittal
Polychromatic Diffraction MTF
Zemax
Zemax OpticStudio 19.4 SP2
Low light objective
9/25/2019
Data for 0.5600 to 0.7400 µm.
Surface: Image
OBJ_DSI_CST_0.3mm_no_oprimization.zmx
Configuration 1 of 2
Legend items refer to Field positions

FIG. 23

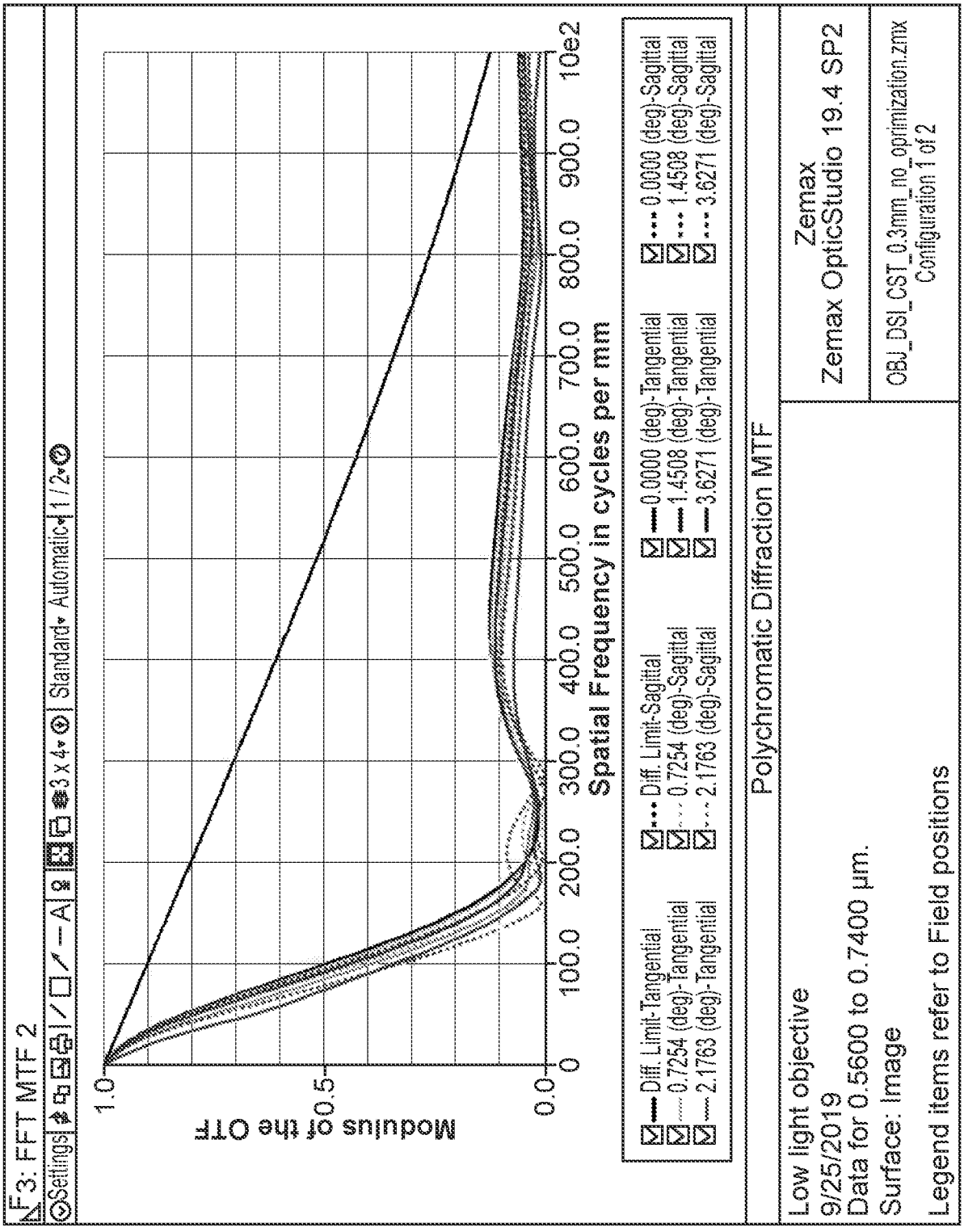
F3: FFT MTF 2
Settings
Standard
Automatic
1 / 2
3 x 4
Modulus of the OTF
1.0
0.5
0.0
0
100.0
200.0
300.0
400.0
500.0
600.0
700.0
800.0
900.0
10e2
Spatial Frequency in cycles per mm
Diff. Limit-Tangential
0.7254 (deg)-Tangential
2.1763 (deg)-Tangential
Diff. Limit-Sagittal
0.7254 (deg)-Sagittal
2.1763 (deg)-Sagittal
0.0000 (deg)-Tangential
1.4508 (deg)-Tangential
3.6271 (deg)-Tangential
0.0000 (deg)-Sagittal
1.4508 (deg)-Sagittal
3.6271 (deg)-Sagittal
Polychromatic Diffraction MTF
Zemax
Zemax OpticStudio 19.4 SP2
Low light objective
9/25/2019
Data for 0.5600 to 0.7400 µm.
Surface: Image
OBJ_DSI_CST_0.3mm_no_oprimization.zmx
Configuration 1 of 2
Legend items refer to Field positions

FIG. 24

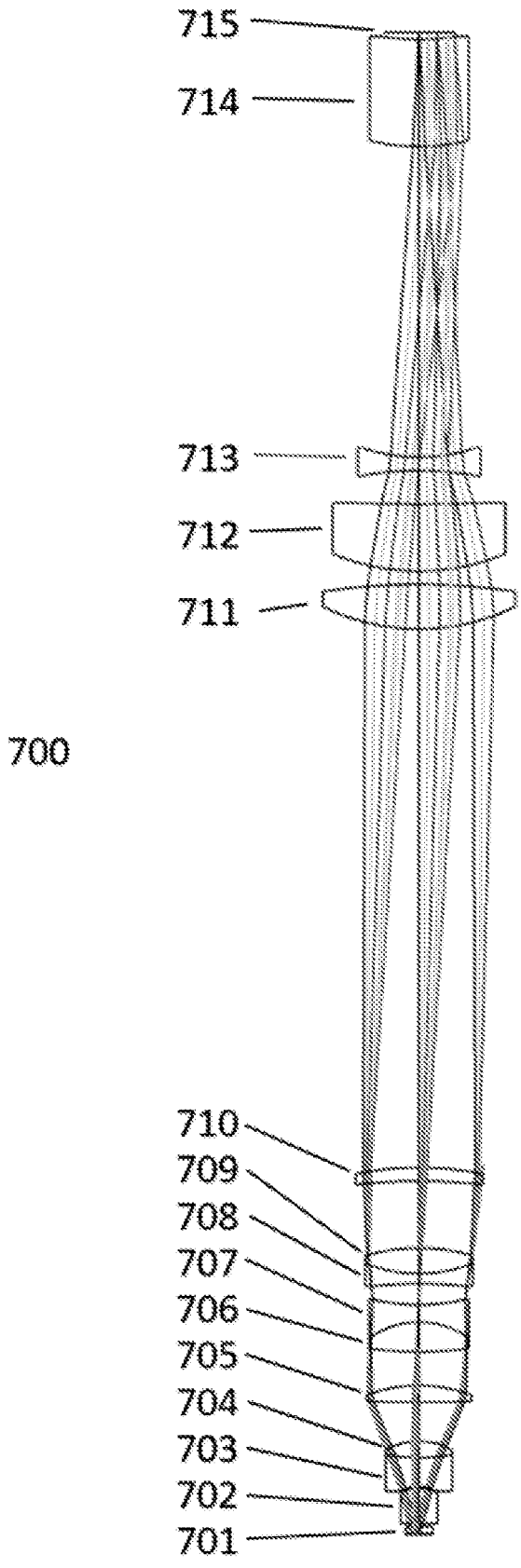


FIG. 25

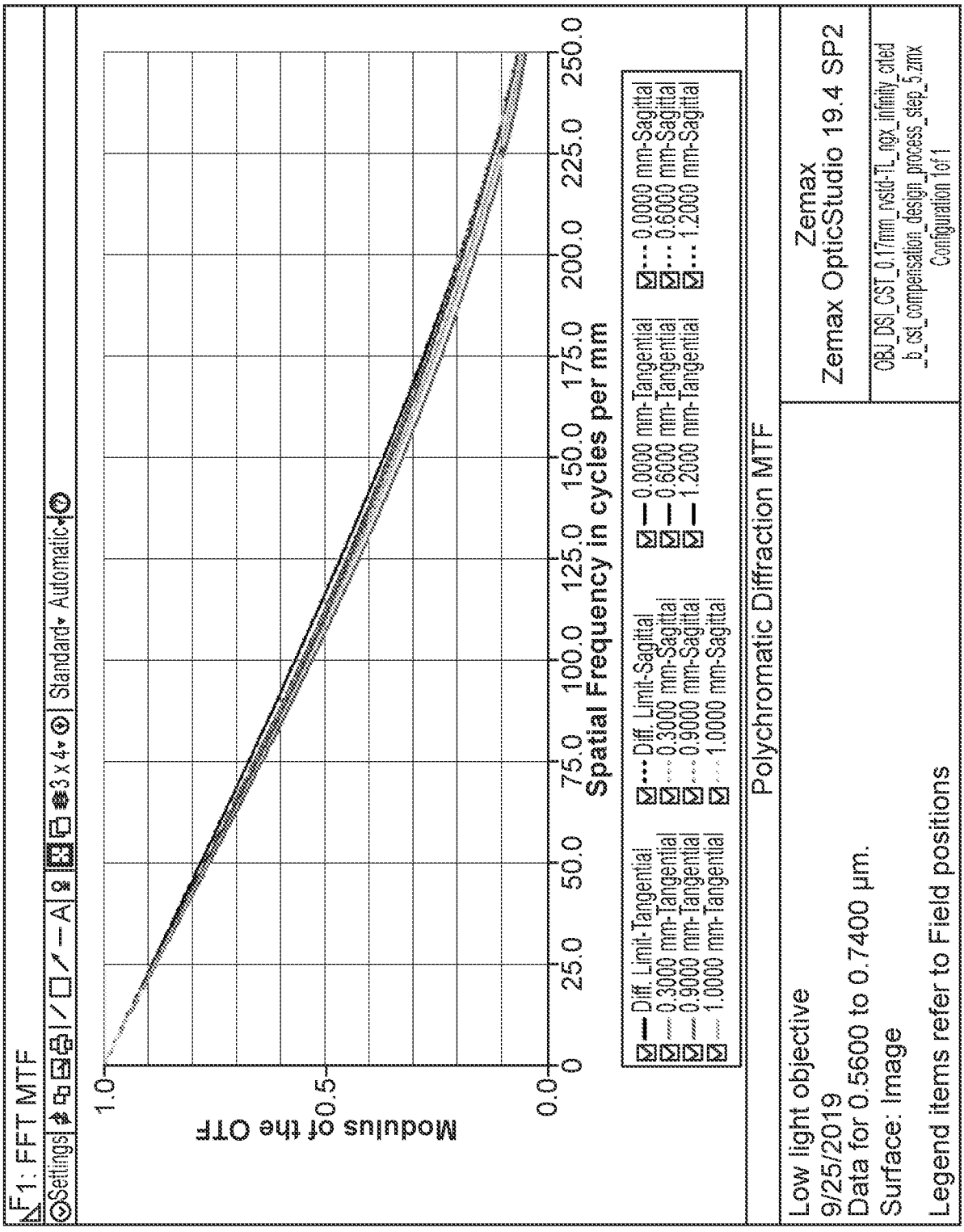
1: FFT MTF
Settings
Standard
Automatic
3 x 4
A
Modulus of the OTF
1.0
0.5
0.0
0
25.0
50.0
75.0
100.0
125.0
150.0
175.0
200.0
225.0
250.0
Spatial Frequency in cycles per mm
Diff. Limit-Tangential
0.3000 mm-Tangential
0.9000 mm-Tangential
1.0000 mm-Tangential
Diff. Limit-Sagittal
0.3000 mm-Sagittal
0.9000 mm-Sagittal
1.0000 mm-Sagittal
0.0000 mm-Tangential
0.6000 mm-Tangential
1.2000 mm-Tangential
0.0000 mm-Sagittal
0.6000 mm-Sagittal
1.2000 mm-Sagittal
Polychromatic Diffraction MTF
Zemax
Zemax OpticStudio 19.4 SP2
OBJ_DSI_CST_0.17mm_nstd-TL_ngx_infinity_cted_b_cst_compensation_design_process_step_5.zmx
Configuration 1 of 1
Low light objective
9/25/2019
Data for 0.5600 to 0.7400 µm.
Surface: Image
Legend items refer to Field positions

FIG. 26

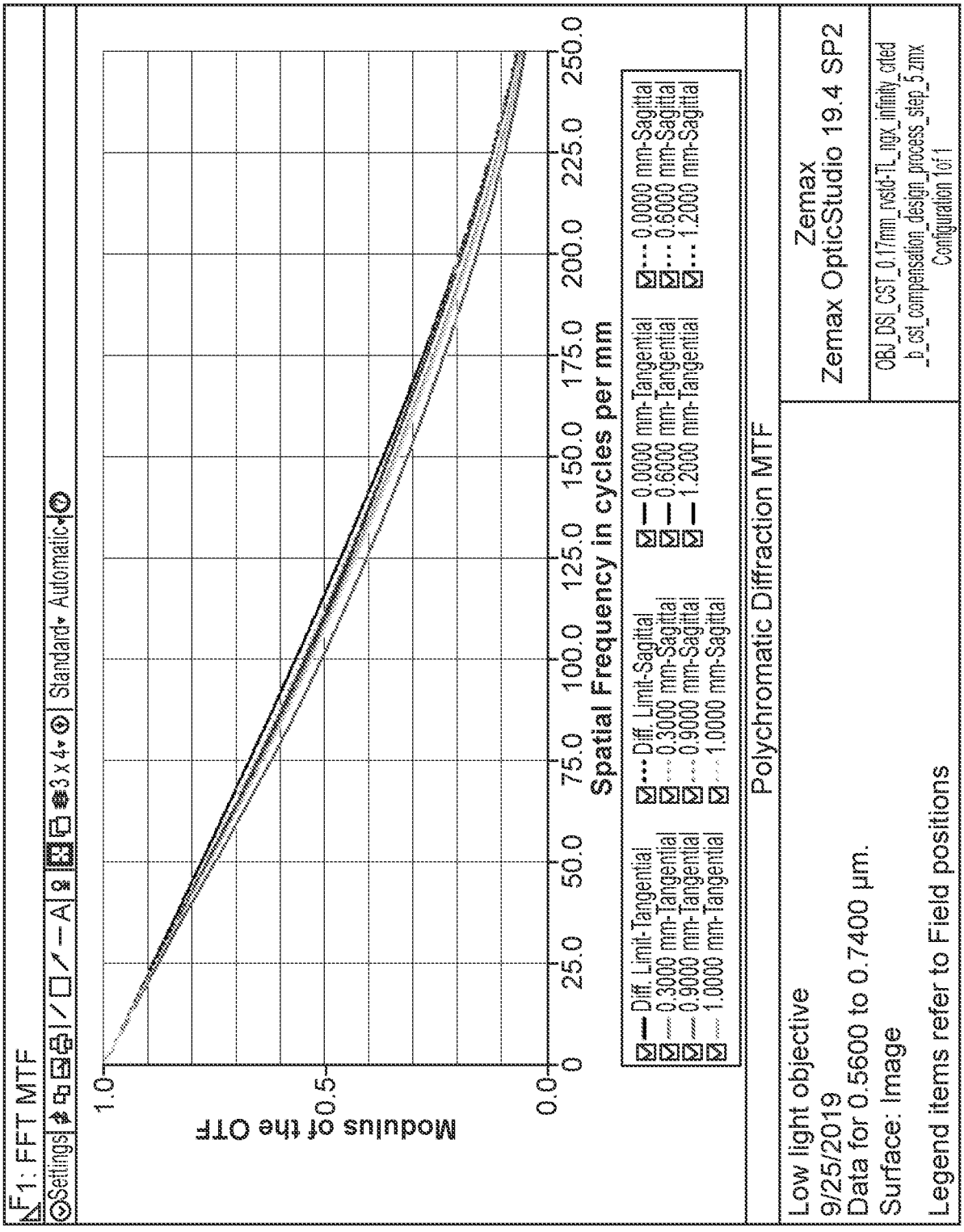
F1: FFT MTF
Settings
Standard
Automatic
3 x 4
Modulus of the OTF
1.0
0.5
0.0
0
25.0
50.0
75.0
100.0
125.0
150.0
175.0
200.0
225.0
250.0
Spatial Frequency in cycles per mm
Diff. Limit-Tangential
0.3000 mm-Tangential
0.9000 mm-Tangential
1.0000 mm-Tangential
Diff. Limit-Sagittal
0.3000 mm-Sagittal
0.9000 mm-Sagittal
1.0000 mm-Sagittal
0.0000 mm-Tangential
0.6000 mm-Tangential
1.2000 mm-Tangential
0.0000 mm-Sagittal
0.6000 mm-Sagittal
1.2000 mm-Sagittal
Polychromatic Diffraction MTF
Zemax
Zemax OpticStudio 19.4 SP2
OBJ_DSI_CST_0.17mm_nstd-TL_ngx_infinity_cited
_b_cst_compensation_design_process_step_5.zmx
Configuration 1 of 1
Low light objective
9/25/2019
Data for 0.5600 to 0.7400 µm.
Surface: Image
Legend items refer to Field positions

FIG. 27

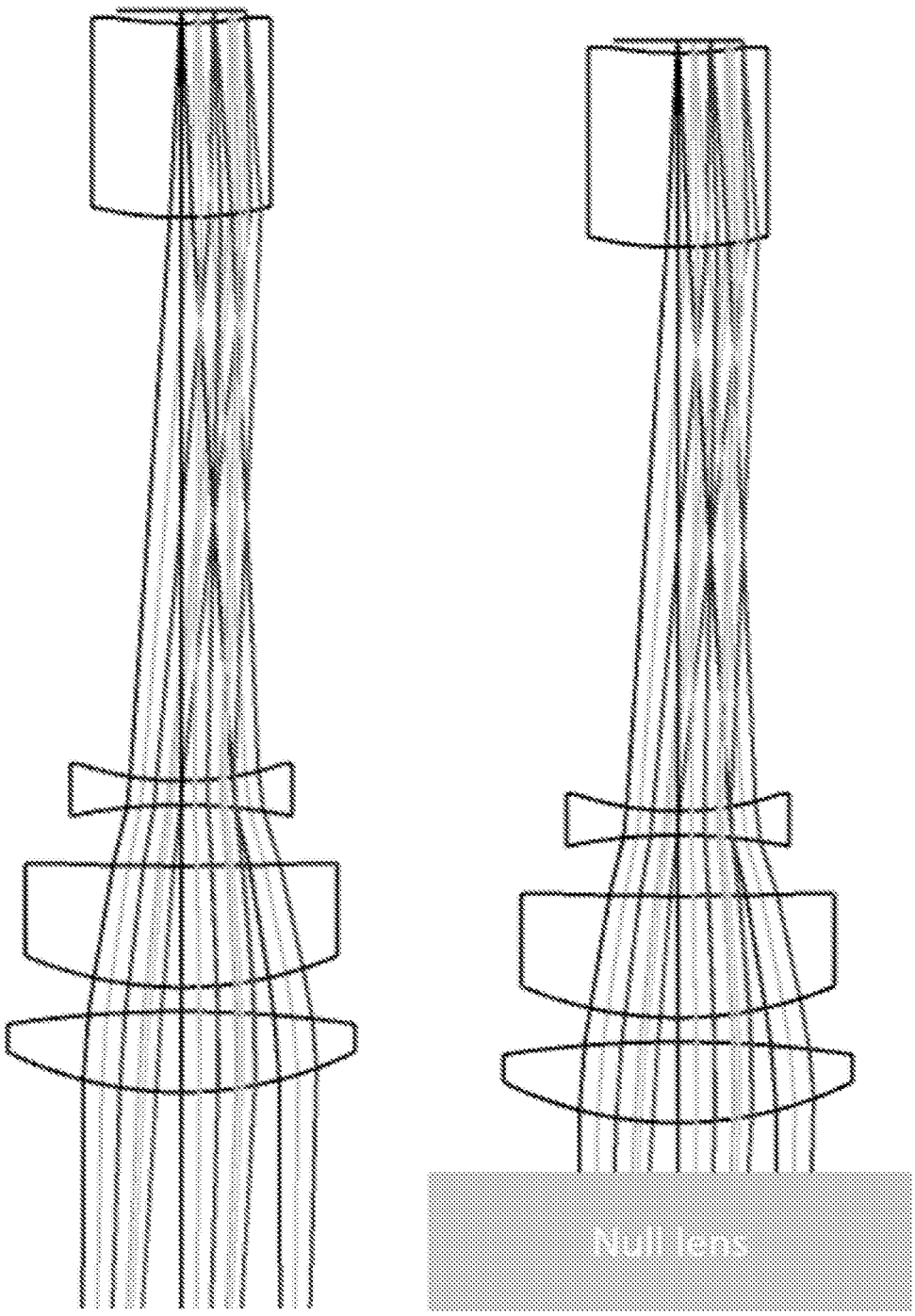


FIG. 28

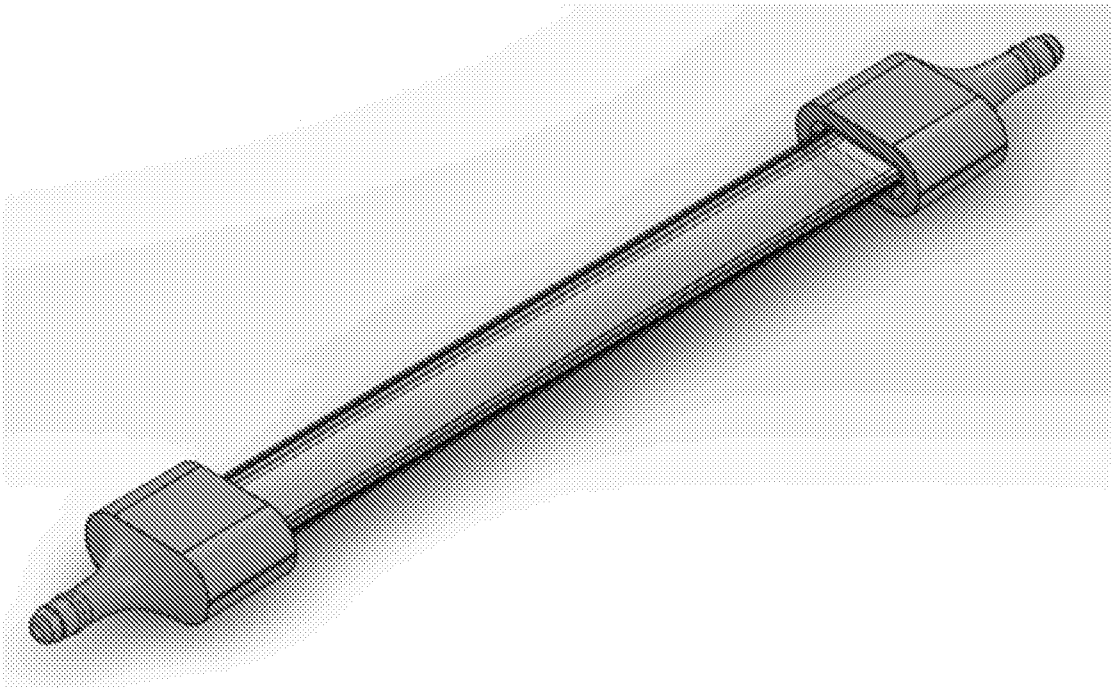

FIG. 29

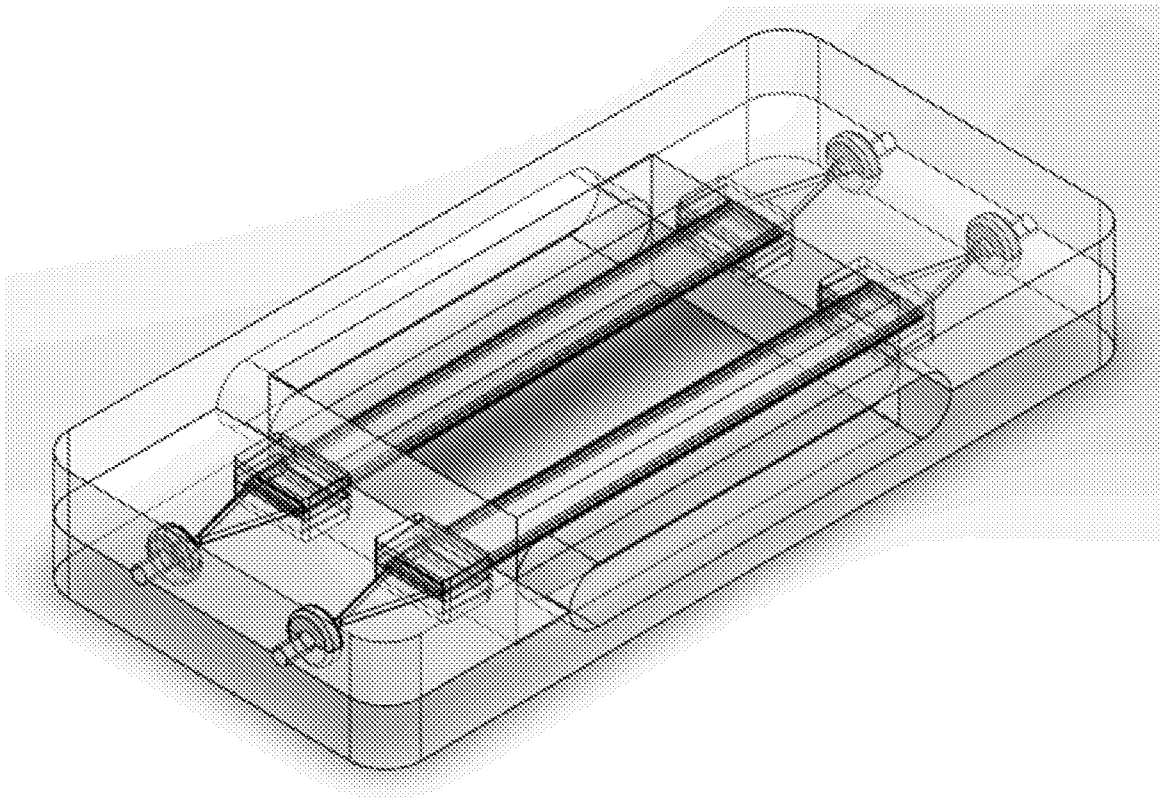

FIG. 30

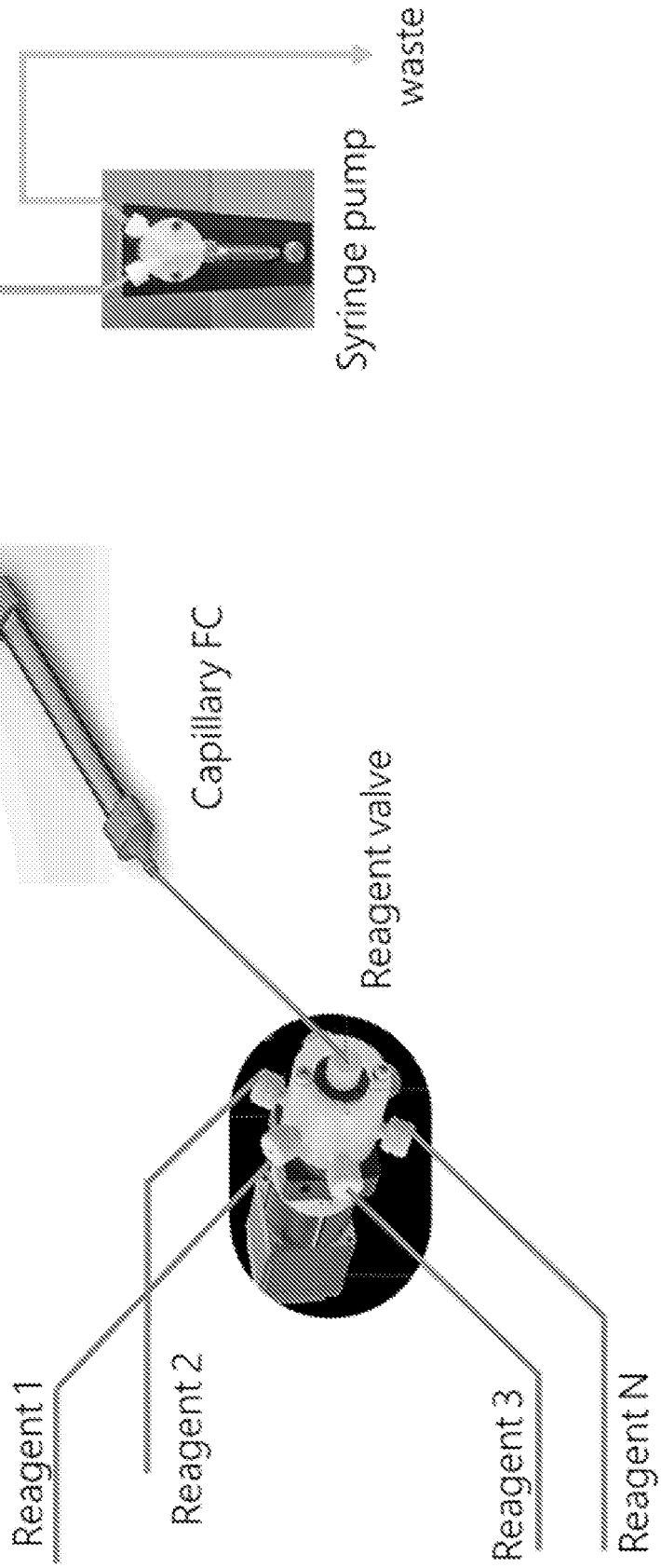
waste
Syringe pump
Capillary FC
Reagent valve
Reagent 1
Reagent 2
Reagent 3
Reagent N

FIG. 31

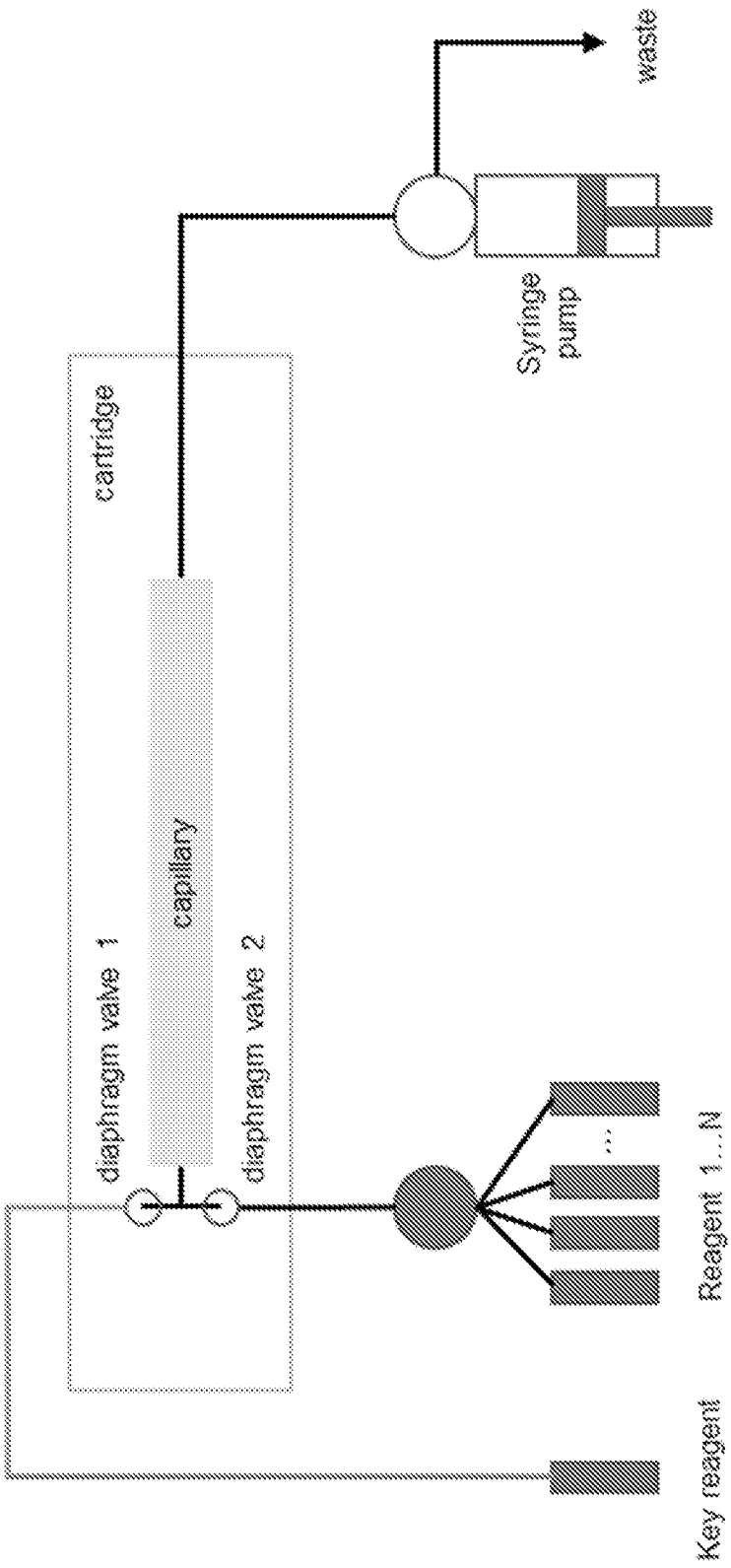
waste
Syringe pump
cartridge
capillary
diaphragm valve 1
diaphragm valve 2
...
Reagent 1...N
Key reagent

FIG. 32

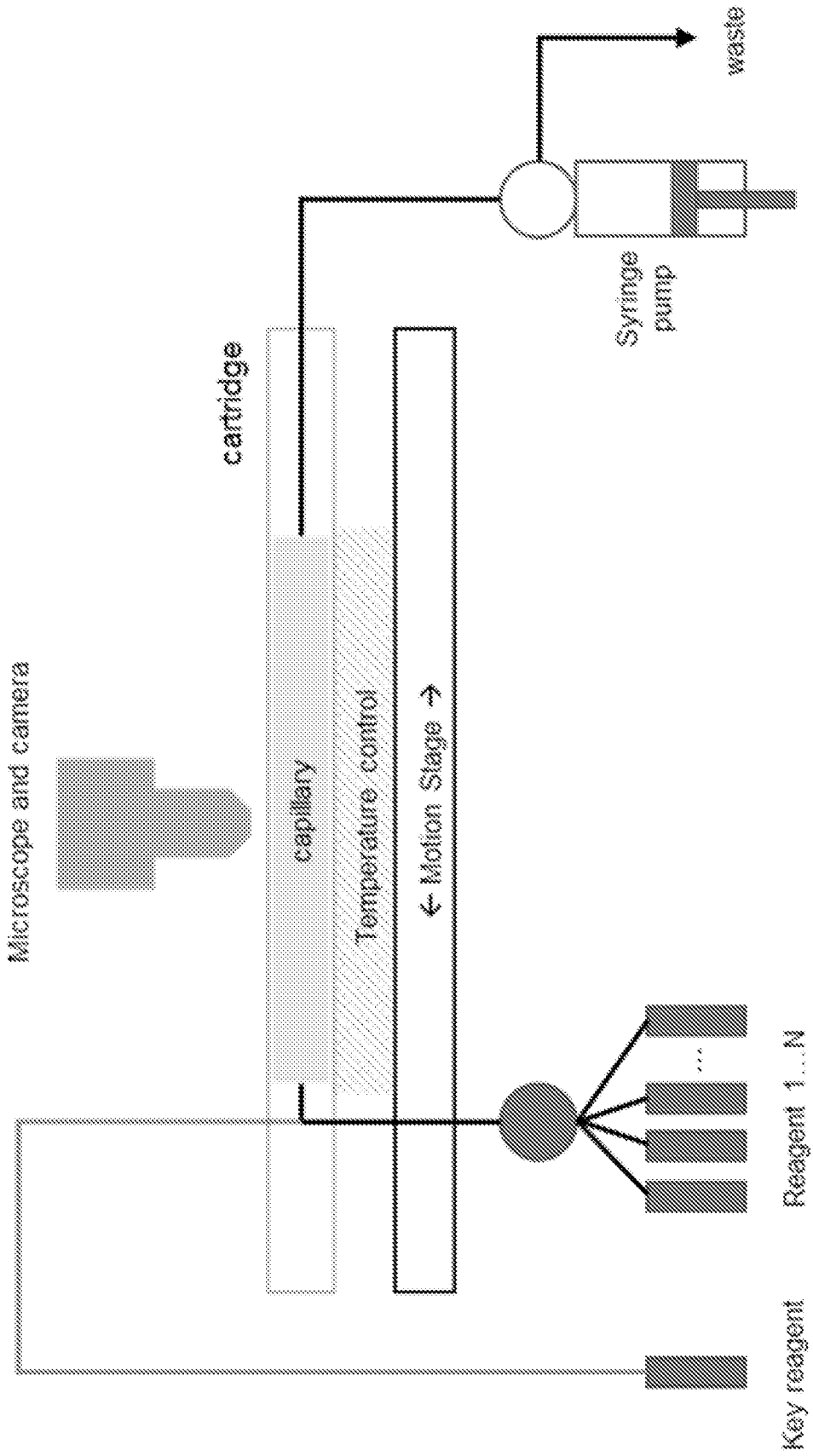
waste
Syringe pump
cartridge
capillary
Temperature control
← Motion Stage →
Microscope and camera
Key reagent
Reagent 1...N
...

FIG. 33

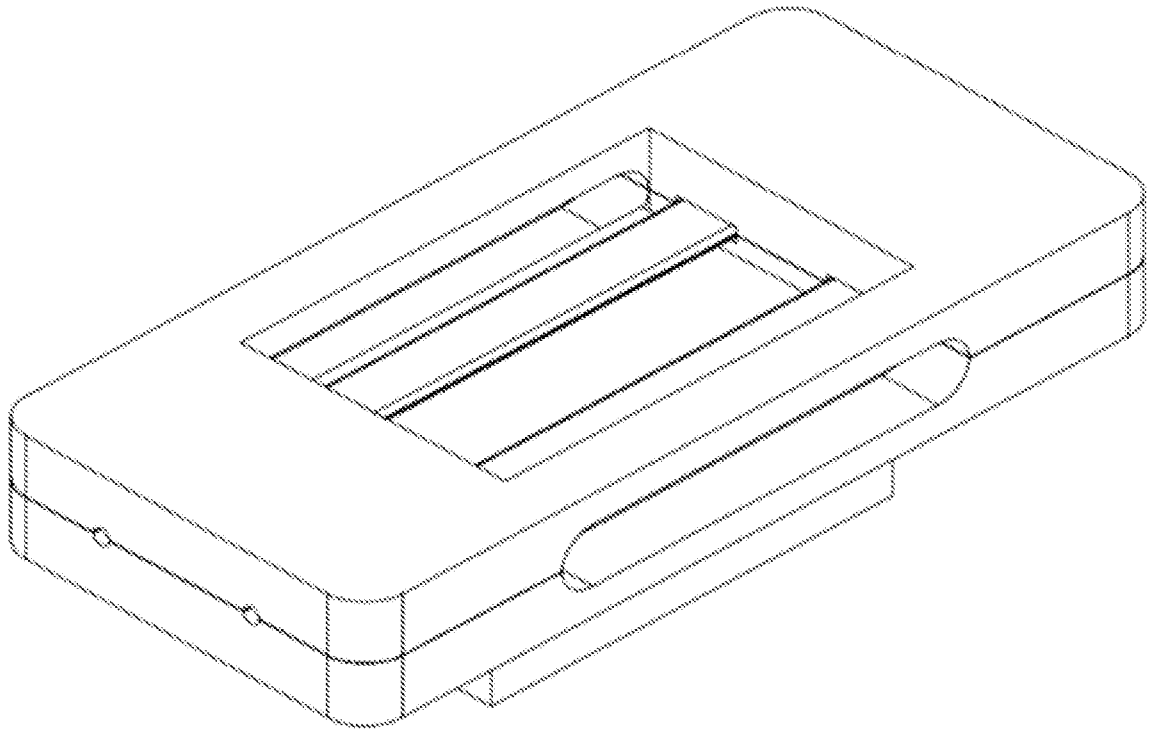

FIG. 34

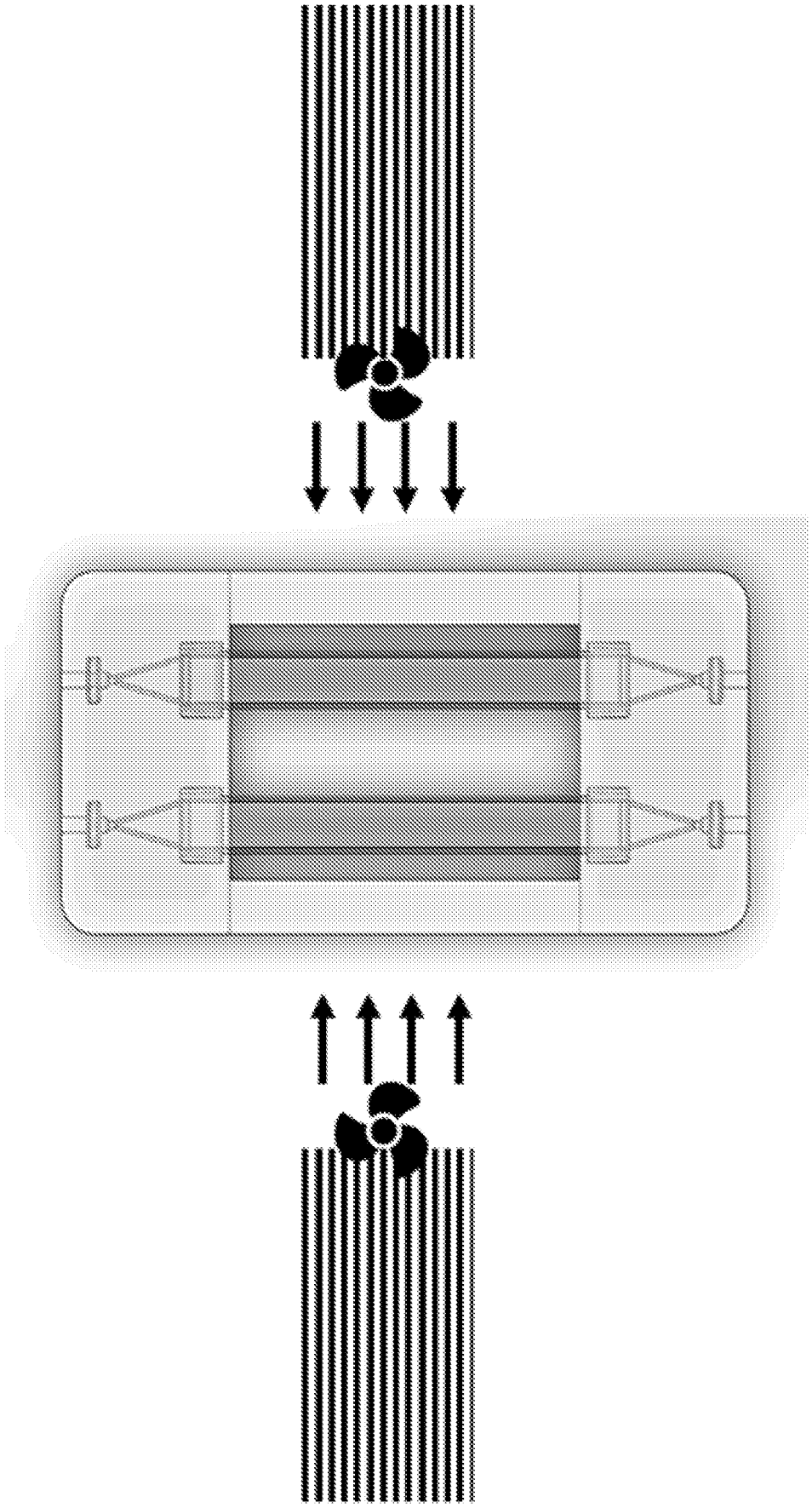

FIG. 35

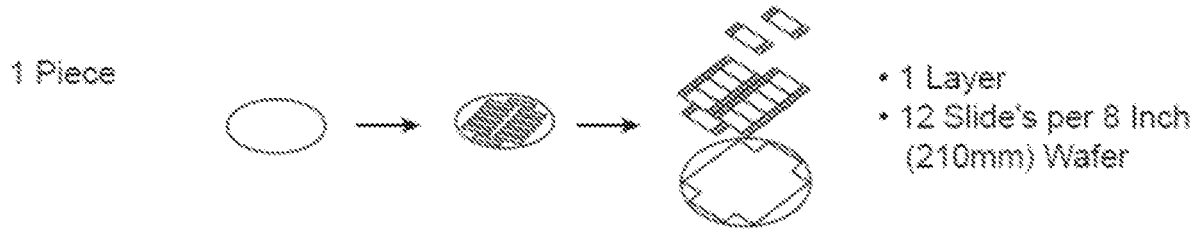


FIG. 36A

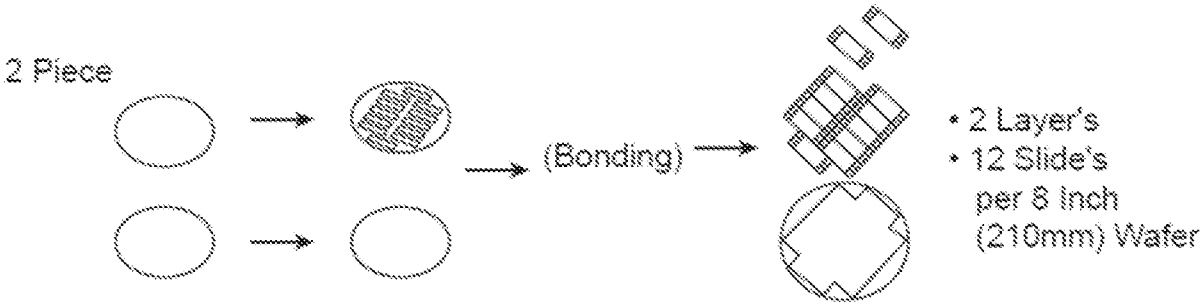


FIG. 36B

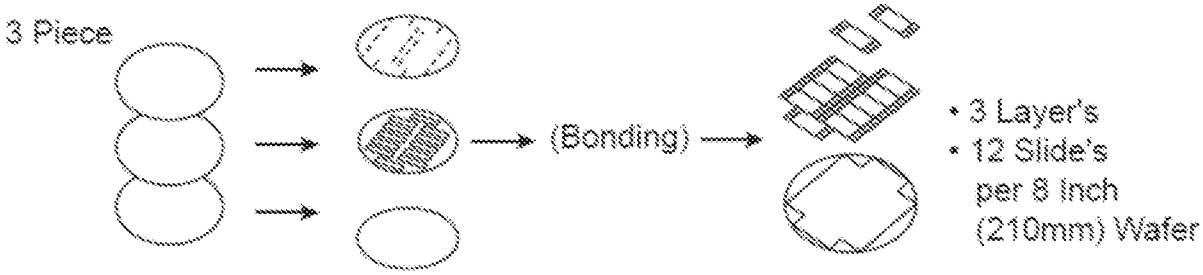


FIG. 36C

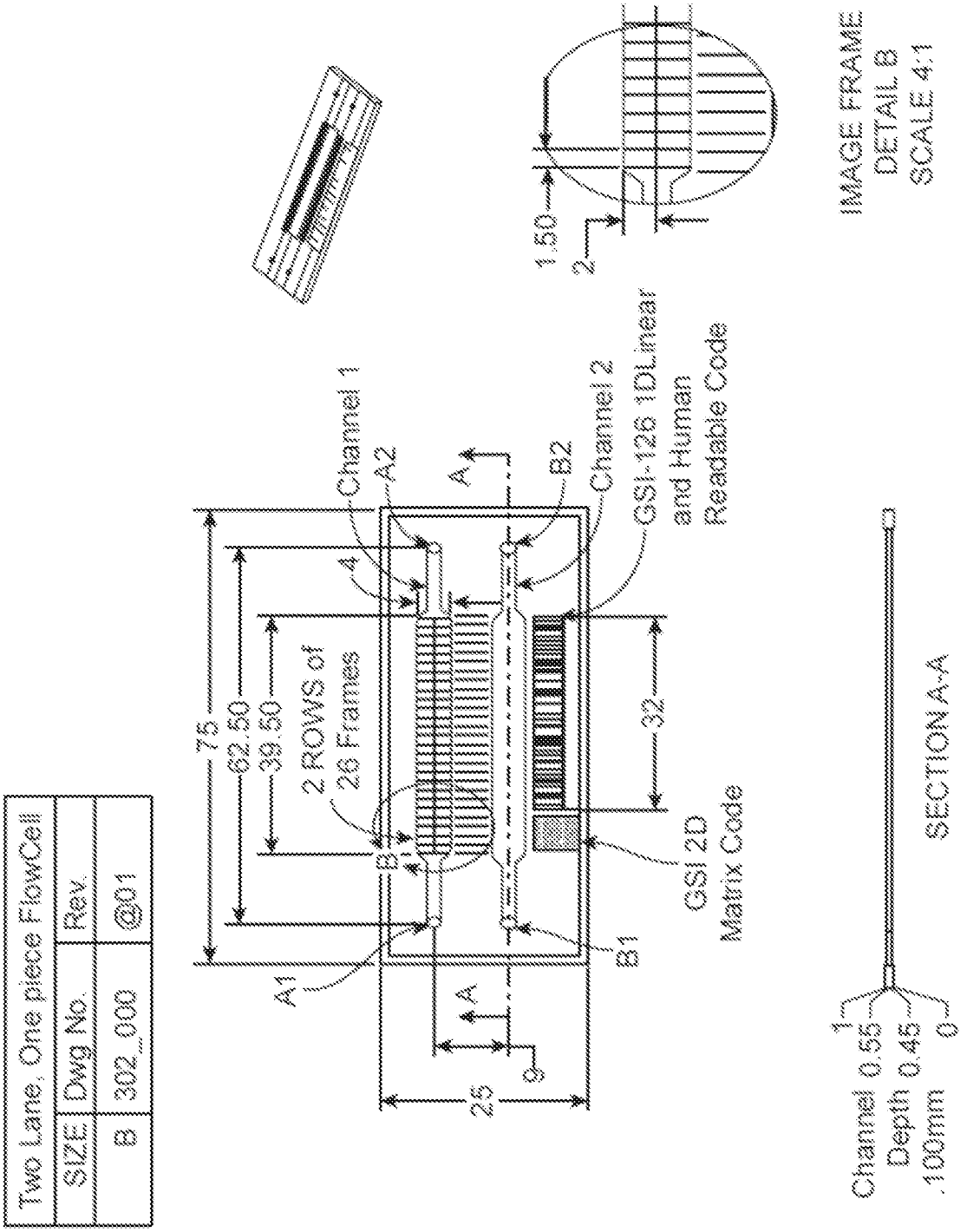
Two Lane, One piece FlowCell
SIZE
Dwg No.
Rev.
B
302_000
@01
75
62.50
39.50
2 ROWS of
26 Frames
Channel 1
A2
A
B2
Channel 2
GSI-126 1DLinear
and Human
Readable Code
4
32
B
A1
B1
GSI 2D
Matrix Code
A
25
9
1.50
2
IMAGE FRAME
DETAIL B
SCALE 4:1
Channel
Depth
.100mm
1
0.55
0.45
0
SECTION A-A

FIG. 37A

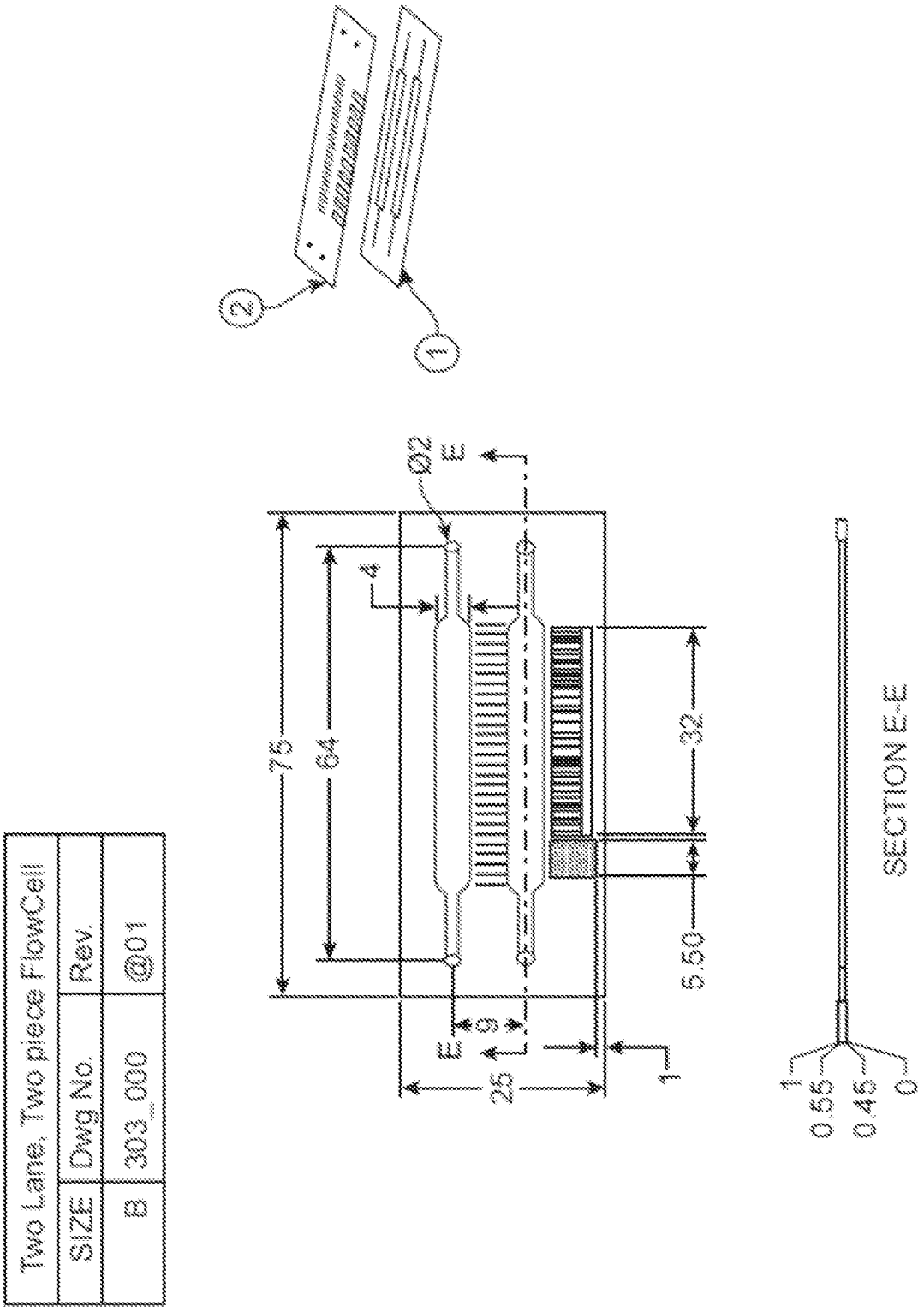
Two Lane, Two piece FlowCell
SIZE
Dwg No.
Rev.
B
303_000
@01
2
1
Ø2
E
4
75
64
32
5.50
9
25
1
SECTION E-E
1
0.55
0.45
0

FIG. 37B

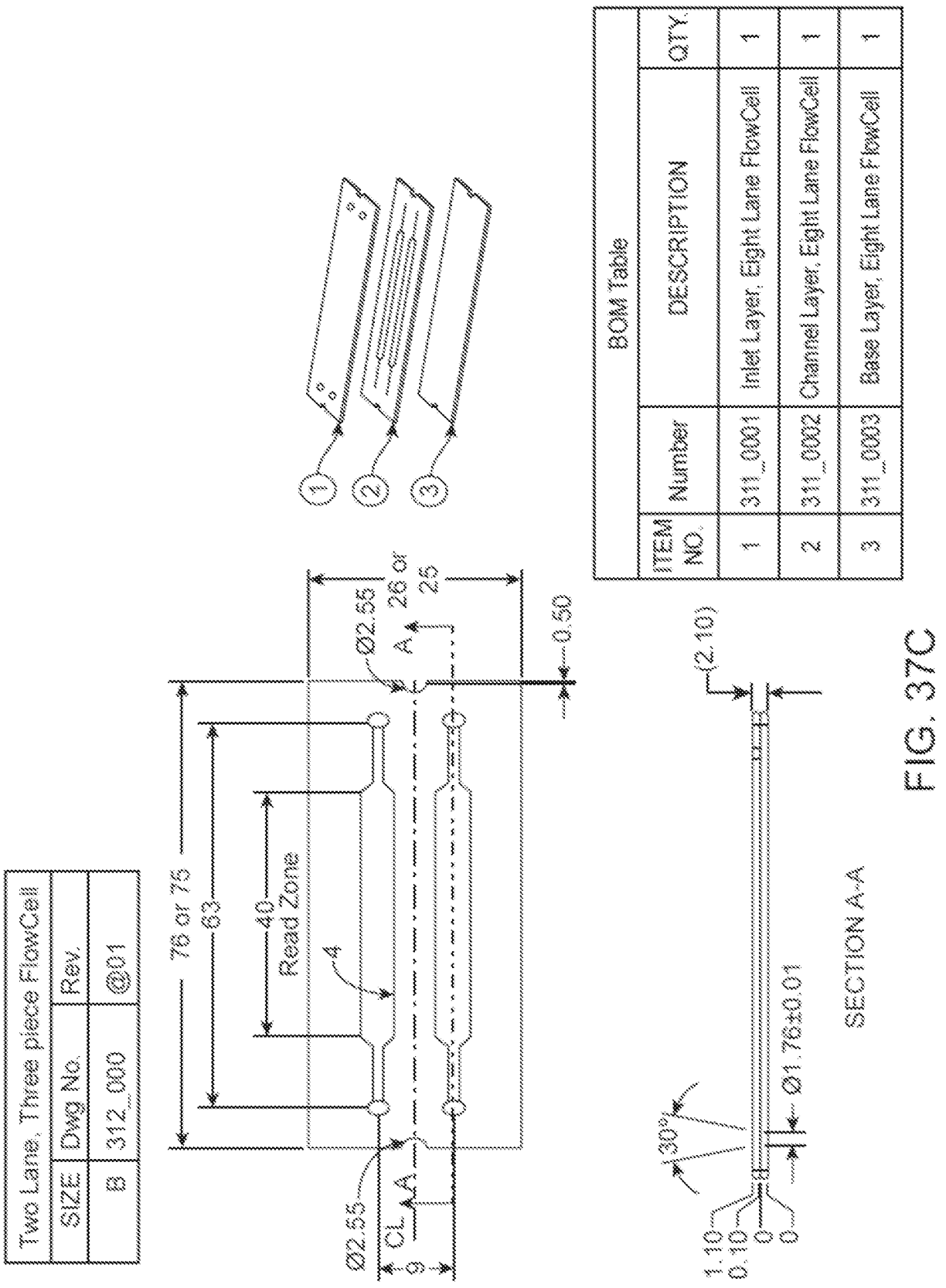
Two Lane, Three piece FlowCell
SIZE
Dwg No.
Rev.
B
312_000
@01
BOM Table
ITEM NO.
Number
DESCRIPTION
QTY.
1
311_0001
Inlet Layer, Eight Lane FlowCell
1
2
311_0002
Channel Layer, Eight Lane FlowCell
1
3
311_0003
Base Layer, Eight Lane FlowCell
1
76 or 75
63
40
Read Zone
4
Ø2.55
A
26 or 25
0.50
Ø2.55
CL
A
9
(2.10)
30°
1.10
0.10
0
0
Ø1.76±0.01
SECTION A-A

FIG. 37C

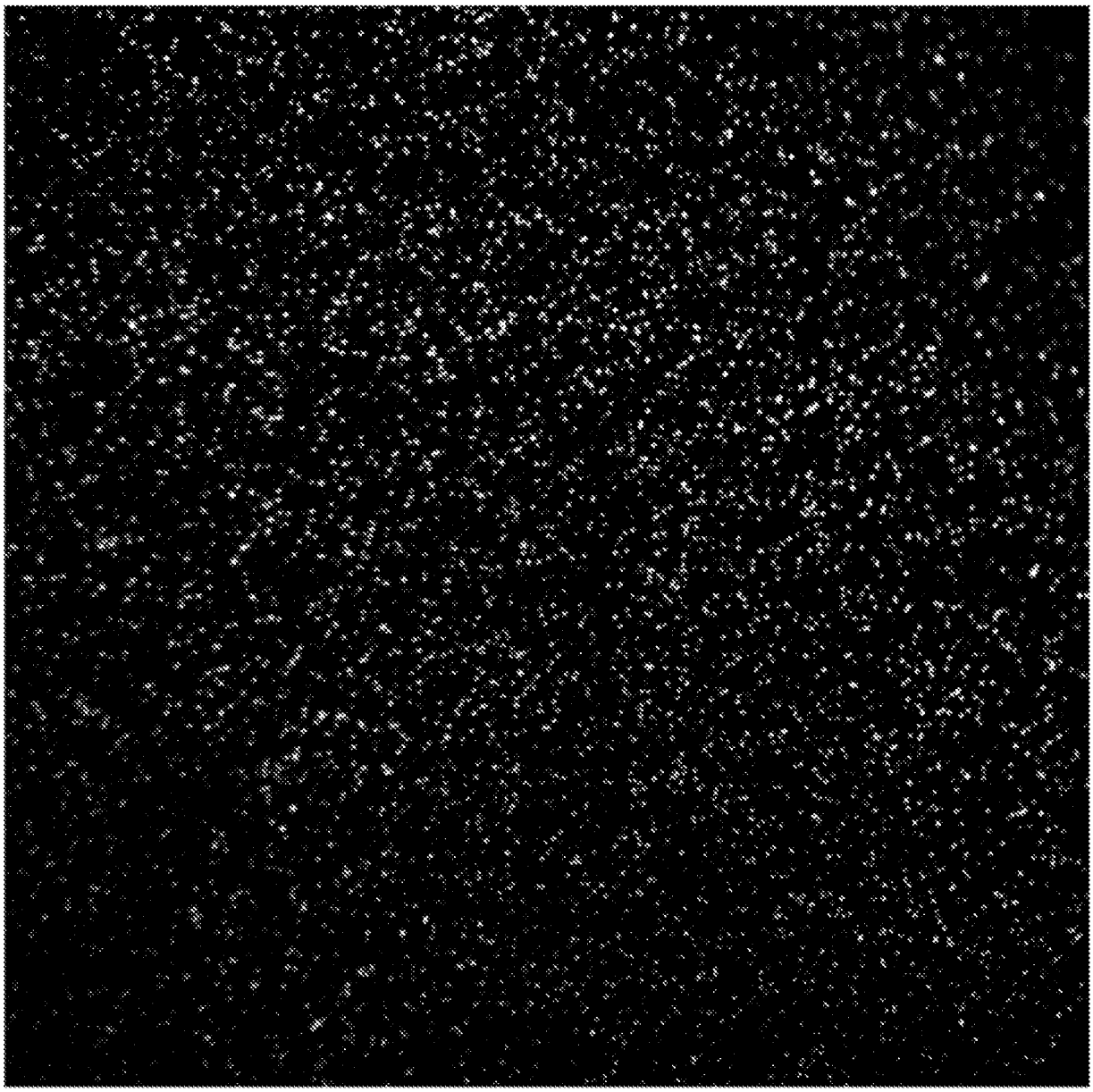

FIG. 38

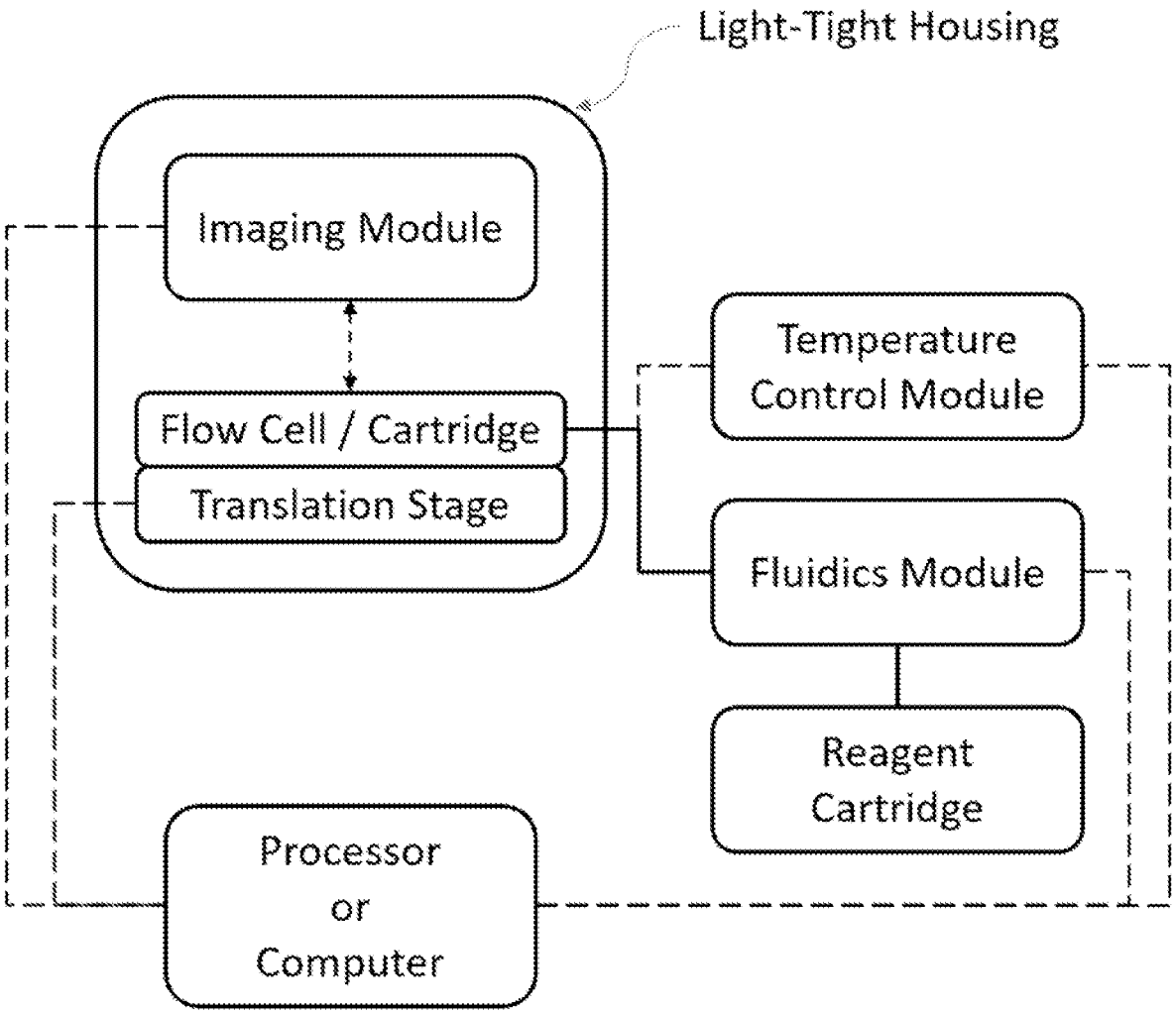
Light-Tight Housing
Imaging Module
Flow Cell / Cartridge
Translation Stage
Temperature Control Module
Fluidics Module
Reagent Cartridge
Processor or Computer

FIG. 39

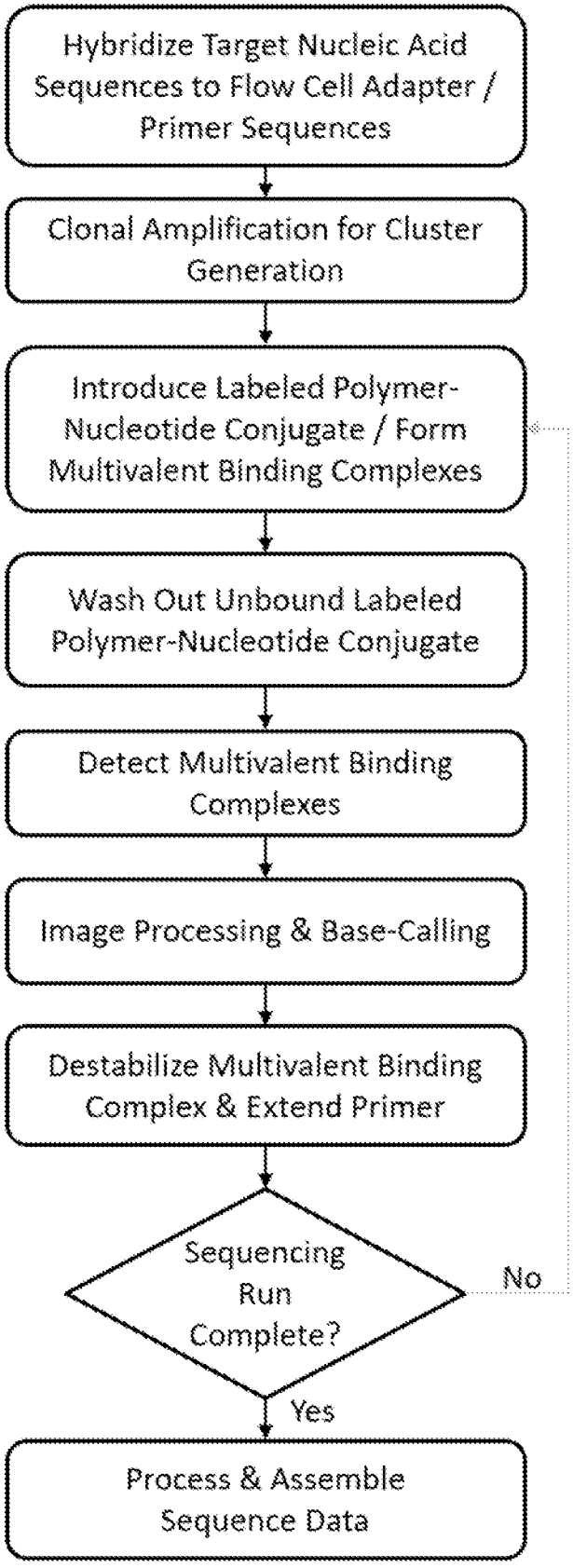
Hybridize Target Nucleic Acid Sequences to Flow Cell Adapter / Primer Sequences
Clonal Amplification for Cluster Generation
Introduce Labeled Polymer-Nucleotide Conjugate / Form Multivalent Binding Complexes
Wash Out Unbound Labeled Polymer-Nucleotide Conjugate
Detect Multivalent Binding Complexes
Image Processing & Base-Calling
Destabilize Multivalent Binding Complex & Extend Primer
Sequencing Run Complete?
No
Yes
Process & Assemble Sequence Data

FIG. 40

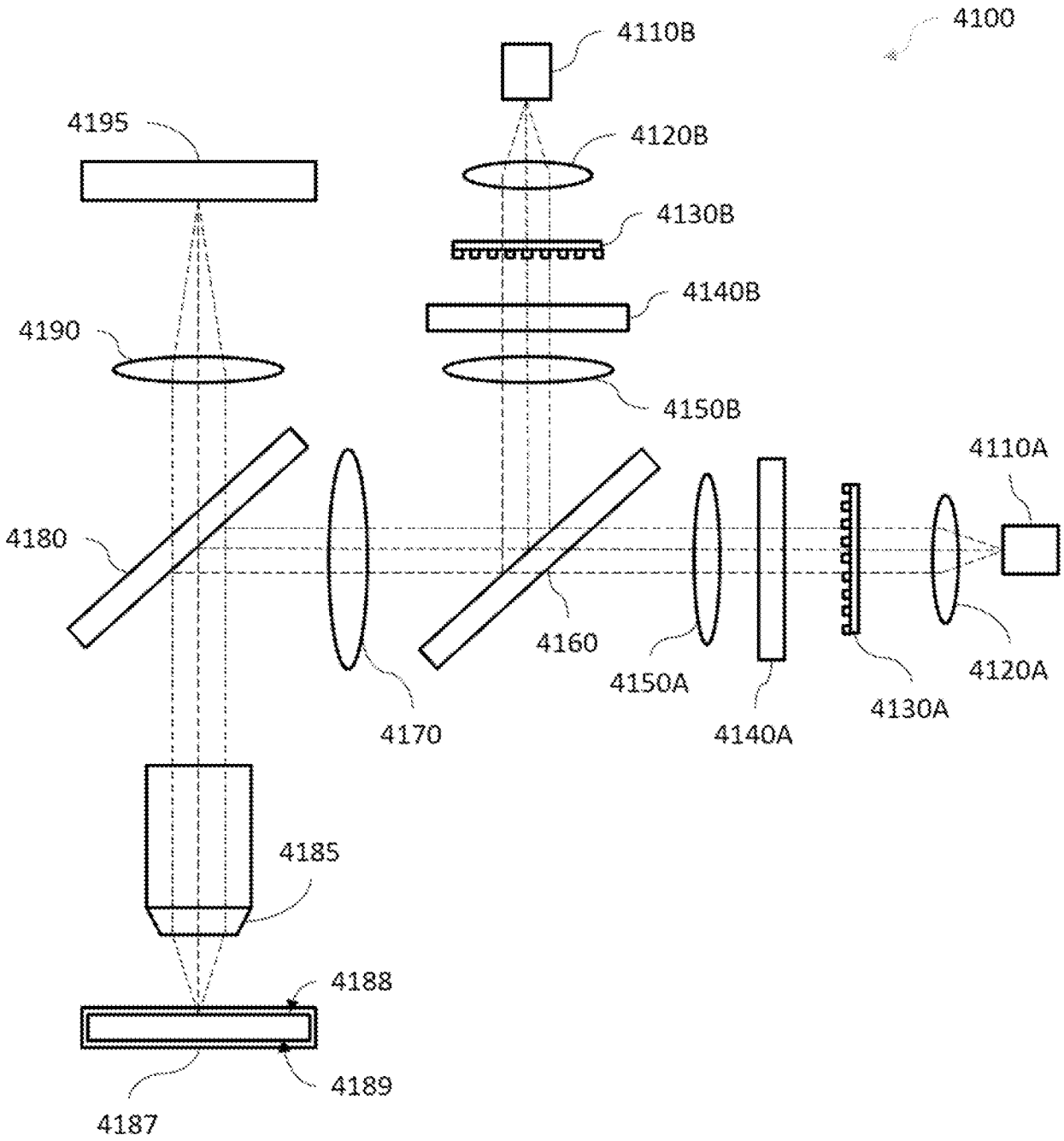
4100
4110B
4195
4120B
4130B
4140B
4190
4150B
4110A
4180
4160
4150A
4120A
4170
4140A
4130A
4185
4188
4189
4187

FIG. 41

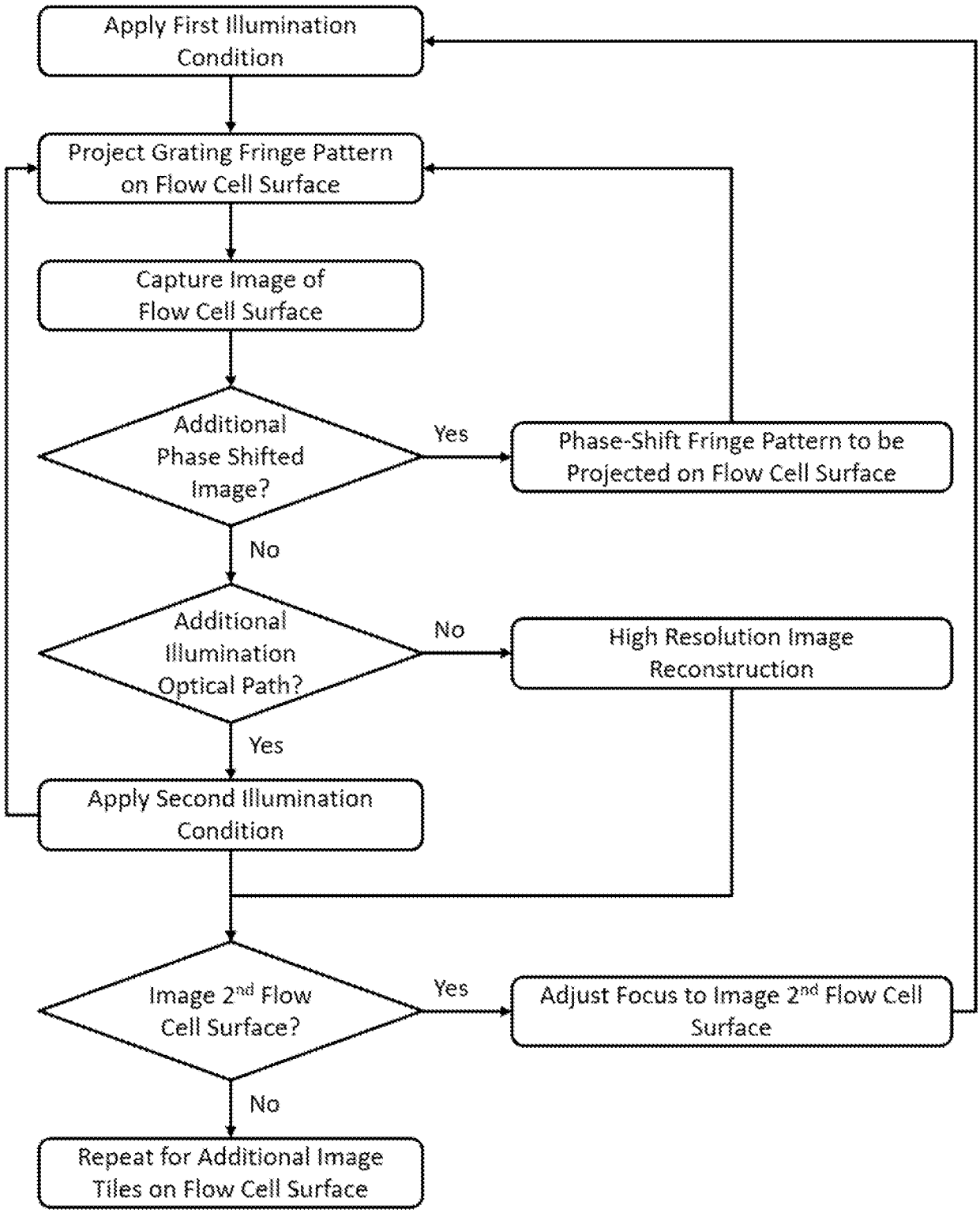
Apply First Illumination Condition
Project Grating Fringe Pattern on Flow Cell Surface
Capture Image of Flow Cell Surface
Additional Phase Shifted Image?
Yes
Phase-Shift Fringe Pattern to be Projected on Flow Cell Surface
No
Additional Illumination Optical Path?
No
High Resolution Image Reconstruction
Yes
Apply Second Illumination Condition
Image 2nd Flow Cell Surface?
Yes
Adjust Focus to Image 2nd Flow Cell Surface
No
Repeat for Additional Image Tiles on Flow Cell Surface

FIG. 42

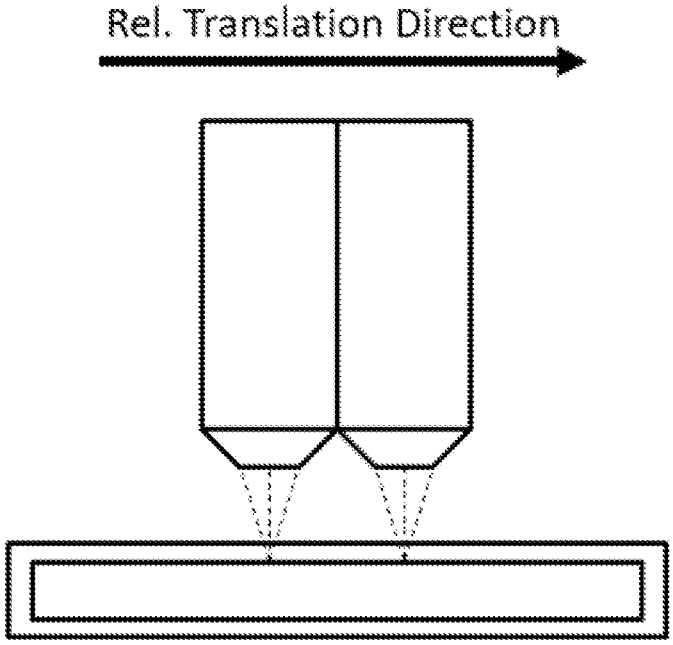


FIG. 43A

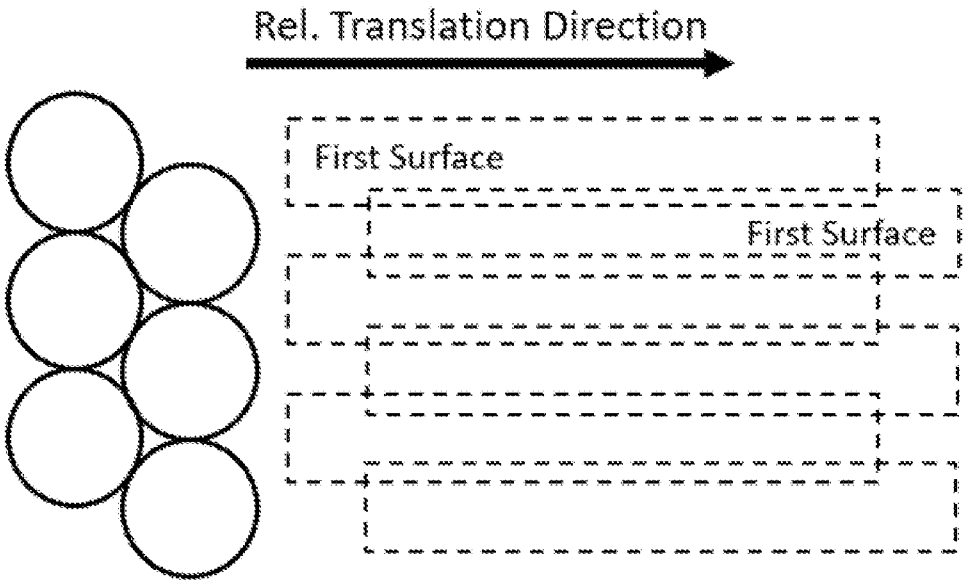


FIG. 43B

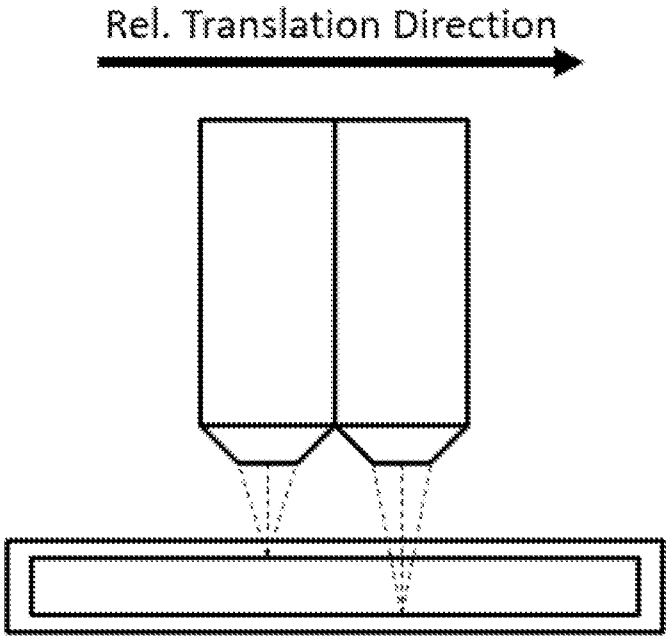


FIG. 44A

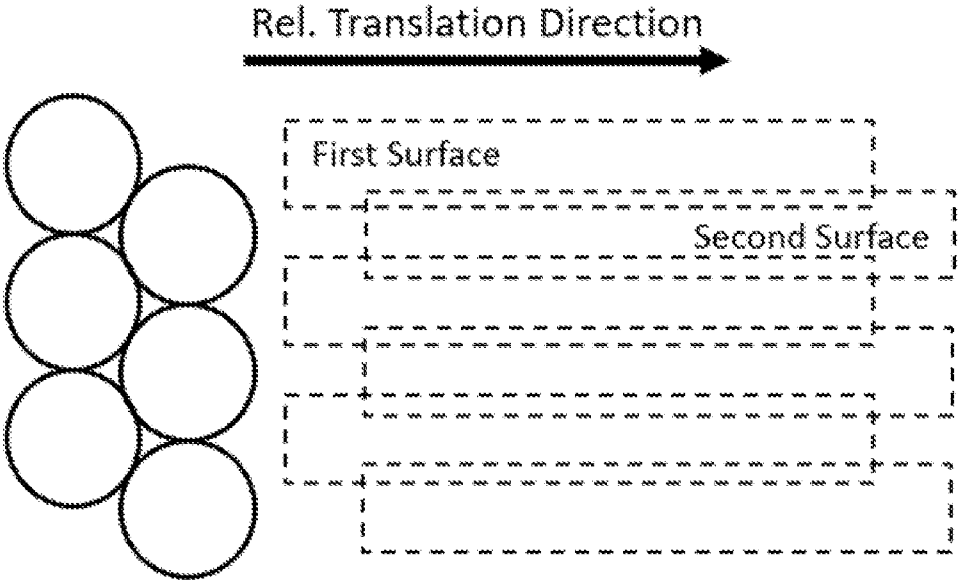


FIG. 44B