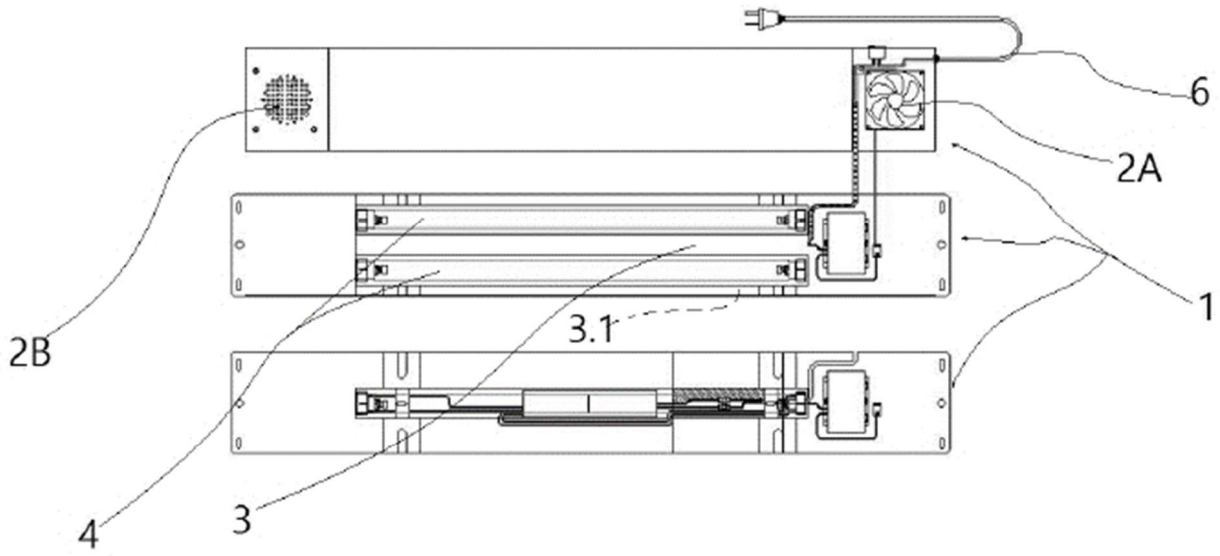

Figure 1

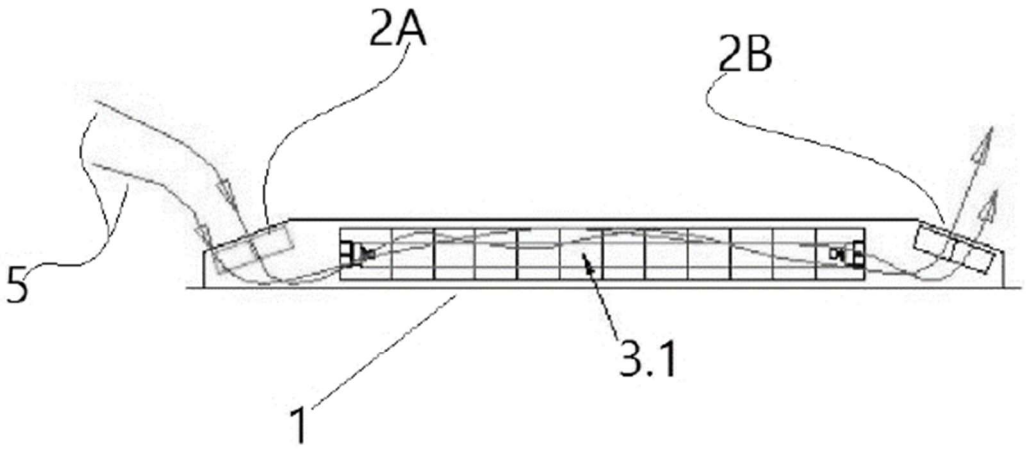

Figure 2

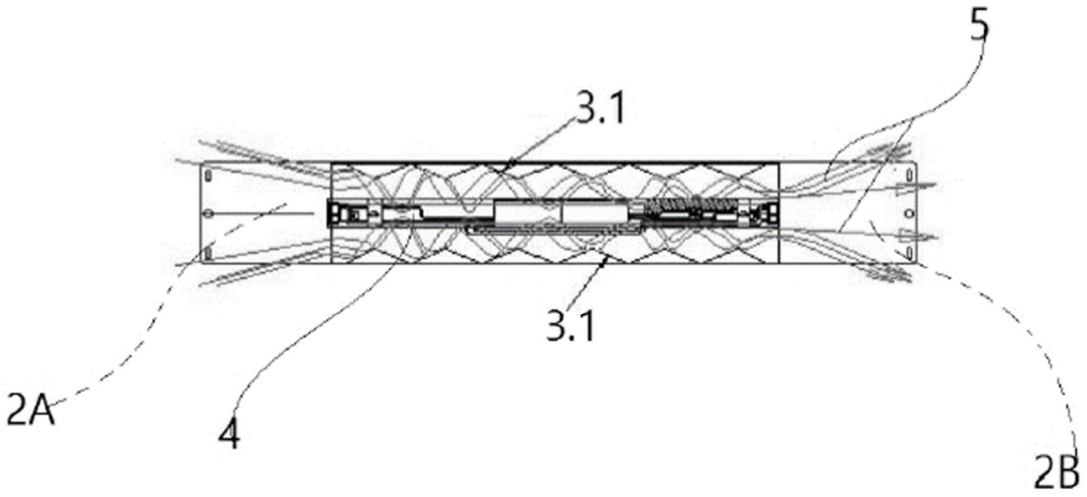

Figure 3

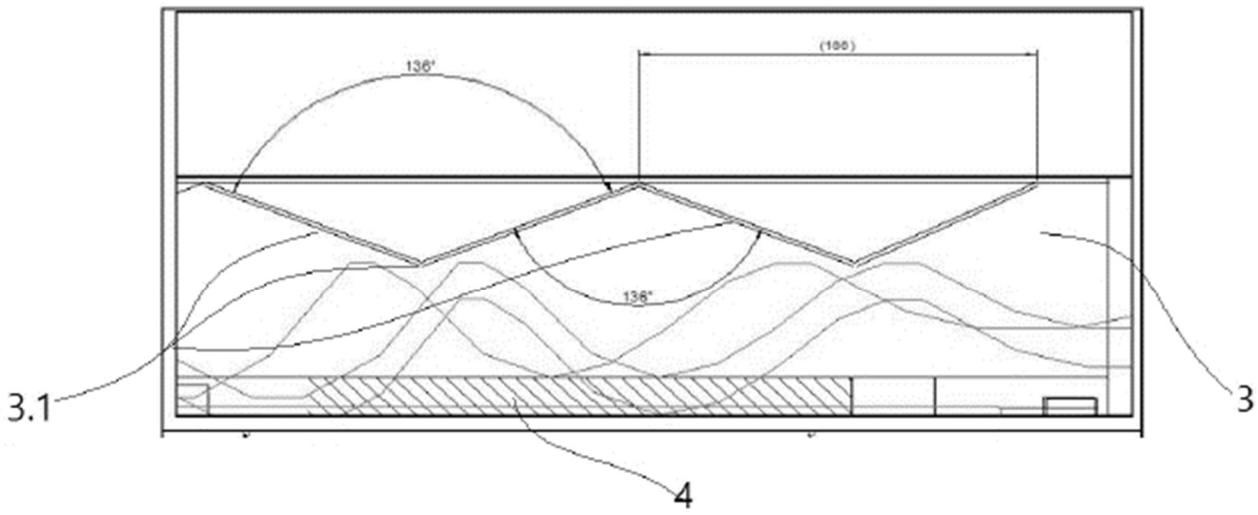

Figure 4