## Drawings

Figure 1: Front elevation of apparatus

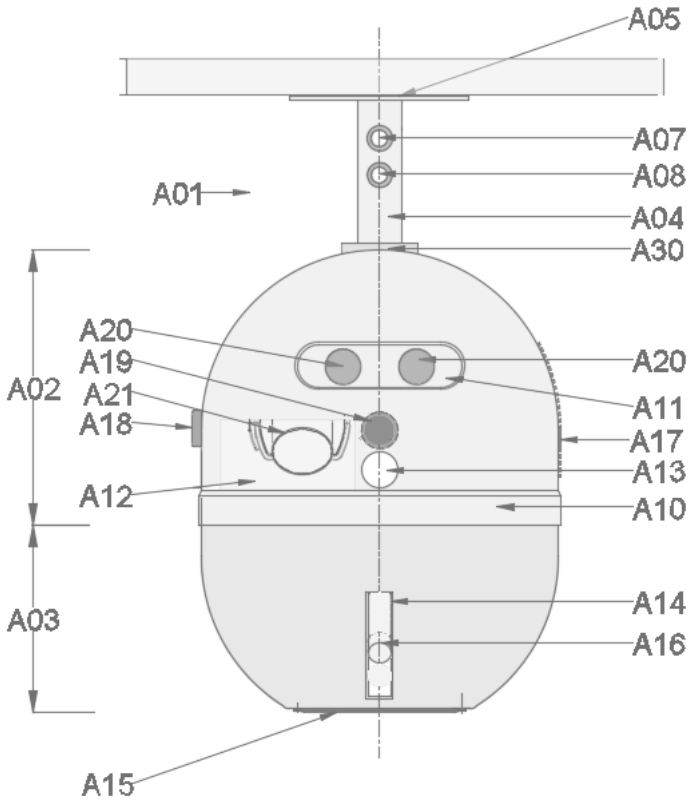


Figure 2: Section (exposed) view across front elevation of apparatus

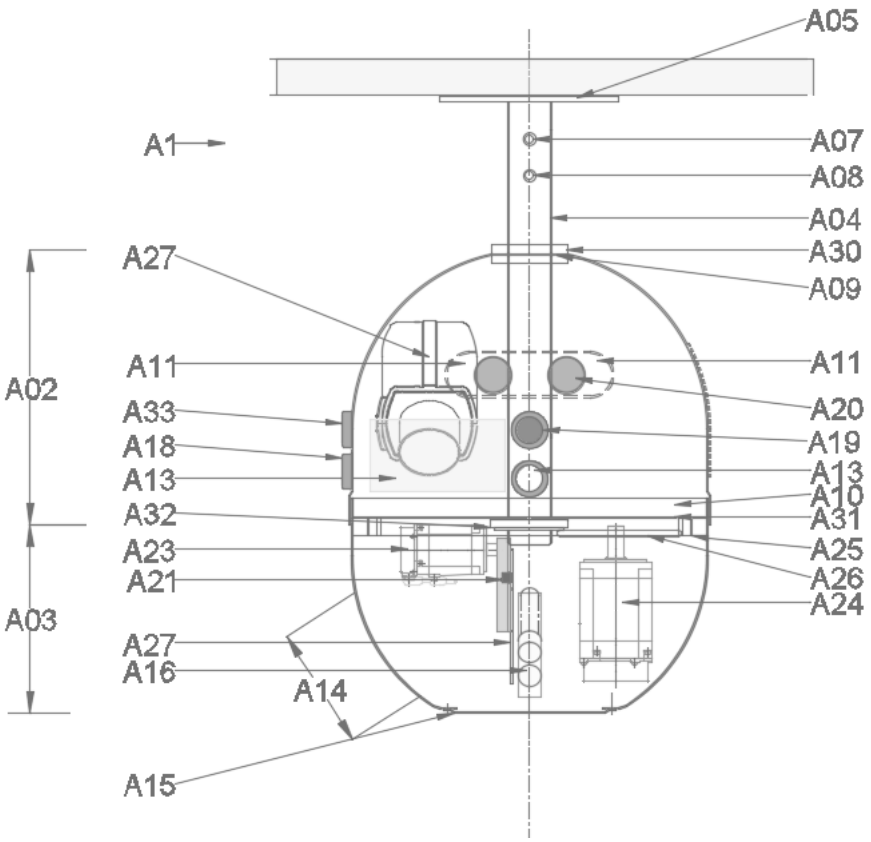

Figure 3: Side elevation of apparatus

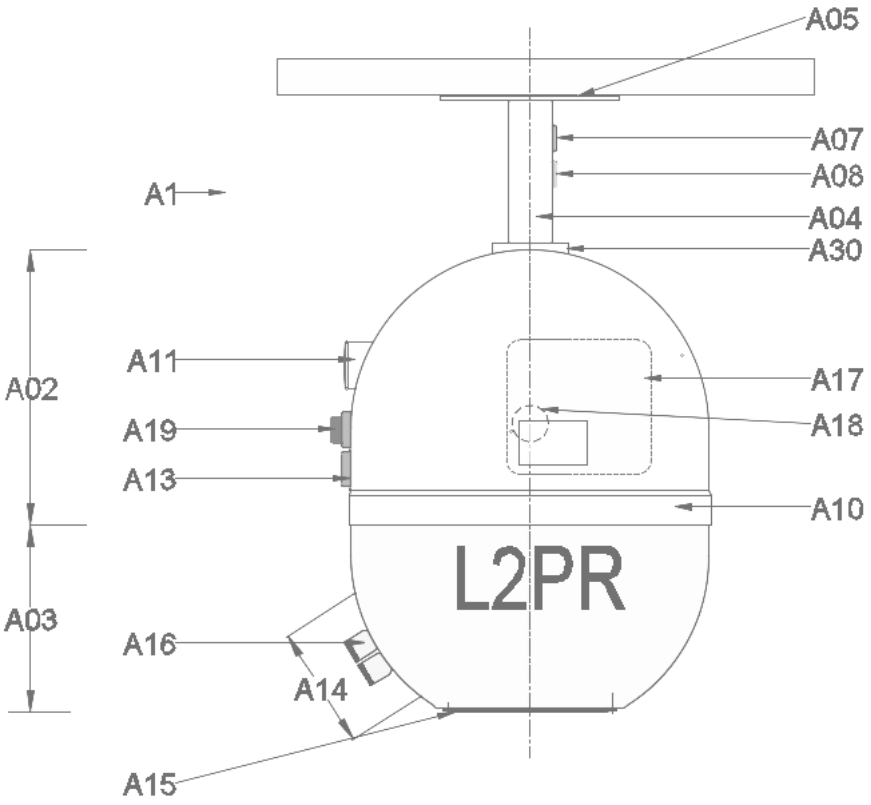


Figure 4: Section (exposed) view across side elevation of apparatus

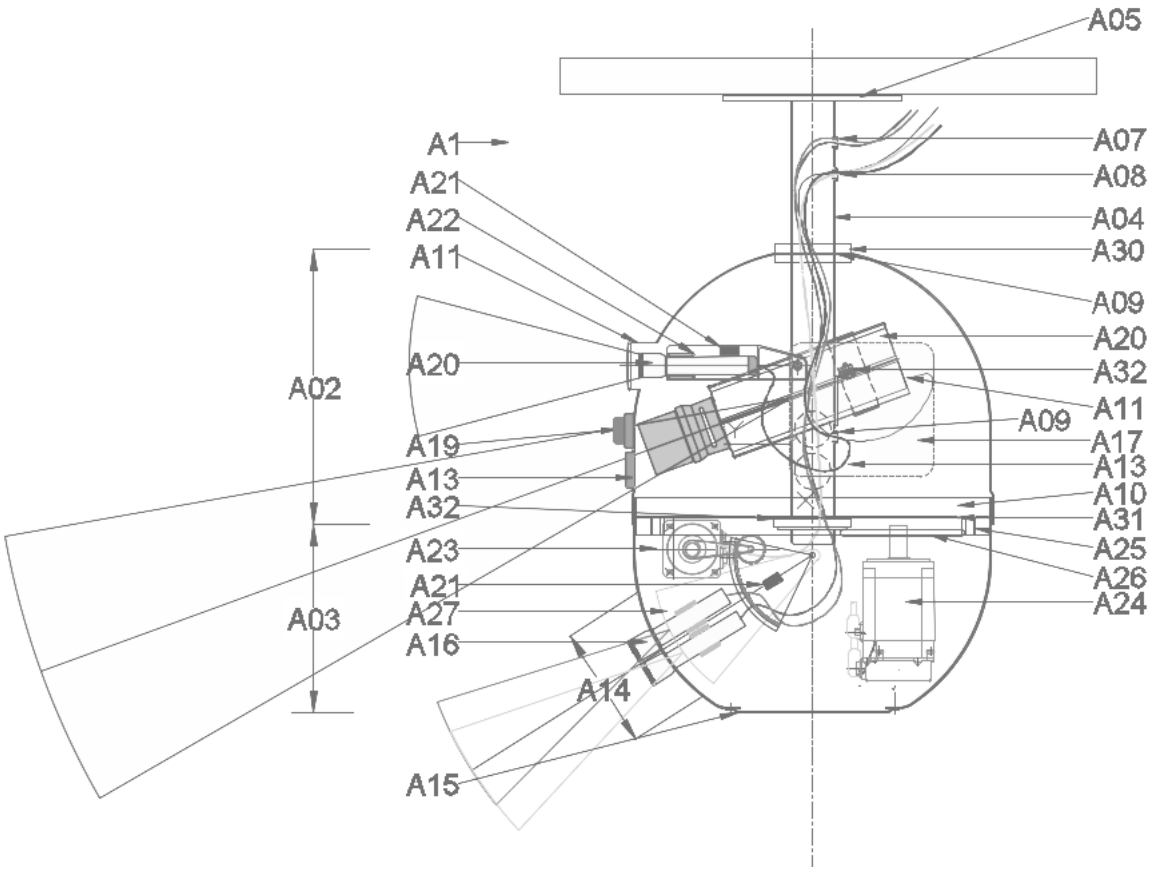

Figure 5: Sectional (exposed) pan view of apparatus across turret base

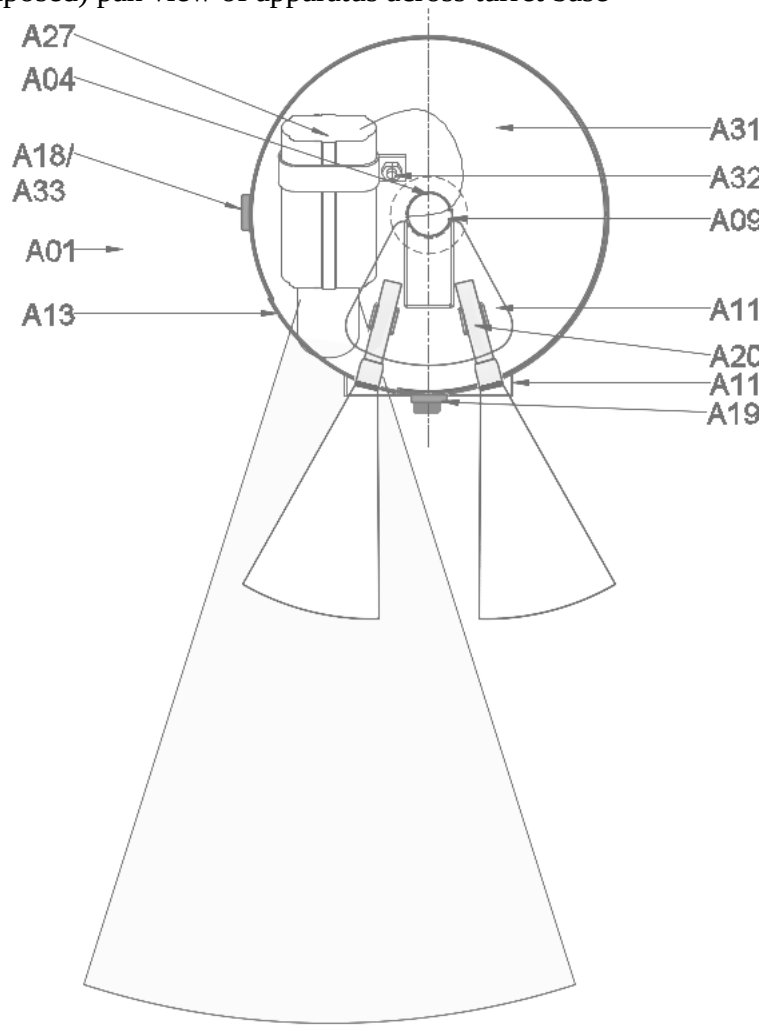


Figure 6: Sectional (exposed) pan view of apparatus across turret

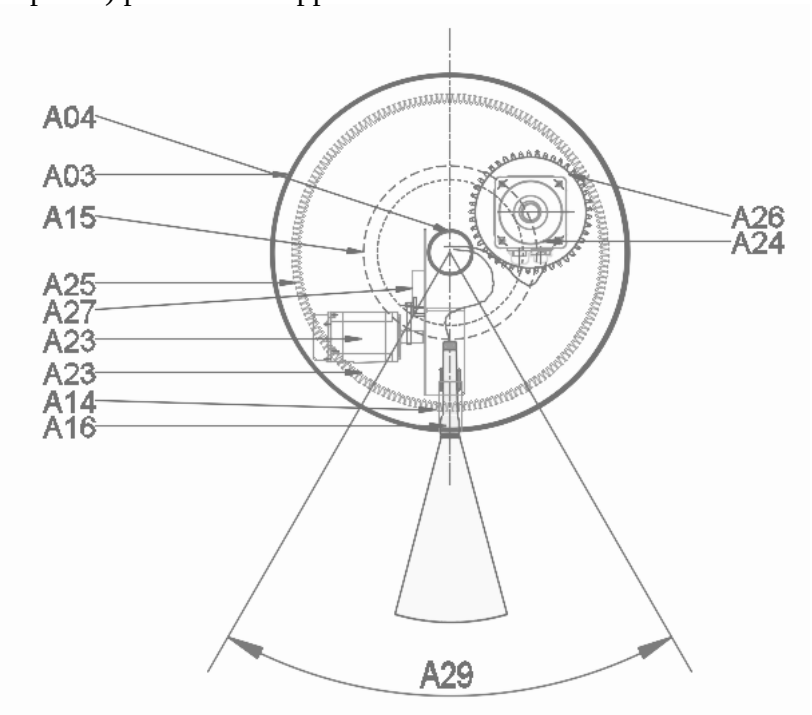

Figure 7: Section view of Area of Protection with single apparatus (Bounding Box illustrated)

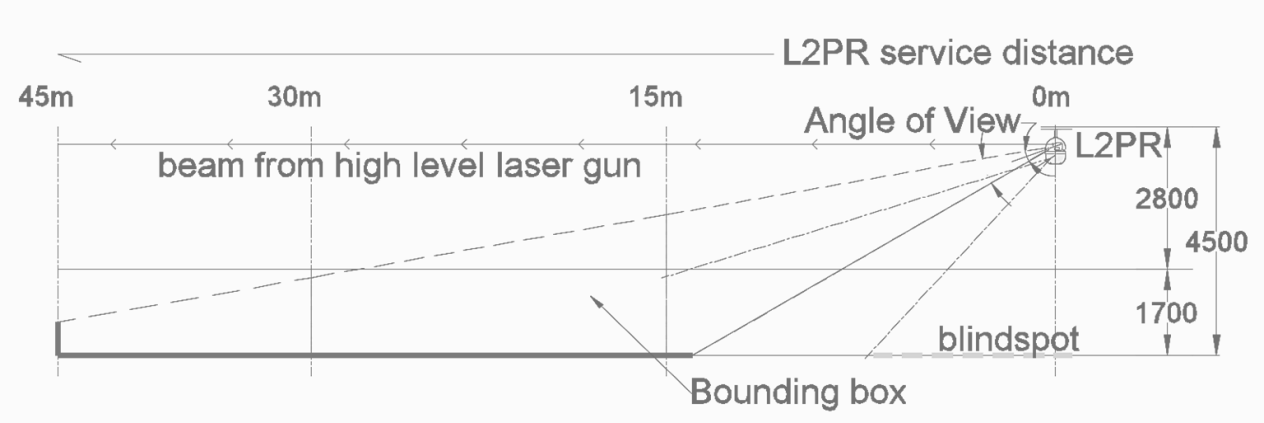


Figure 8: Plan view of Area of Protection (Camera lined to center of Bounding Box illustrated)

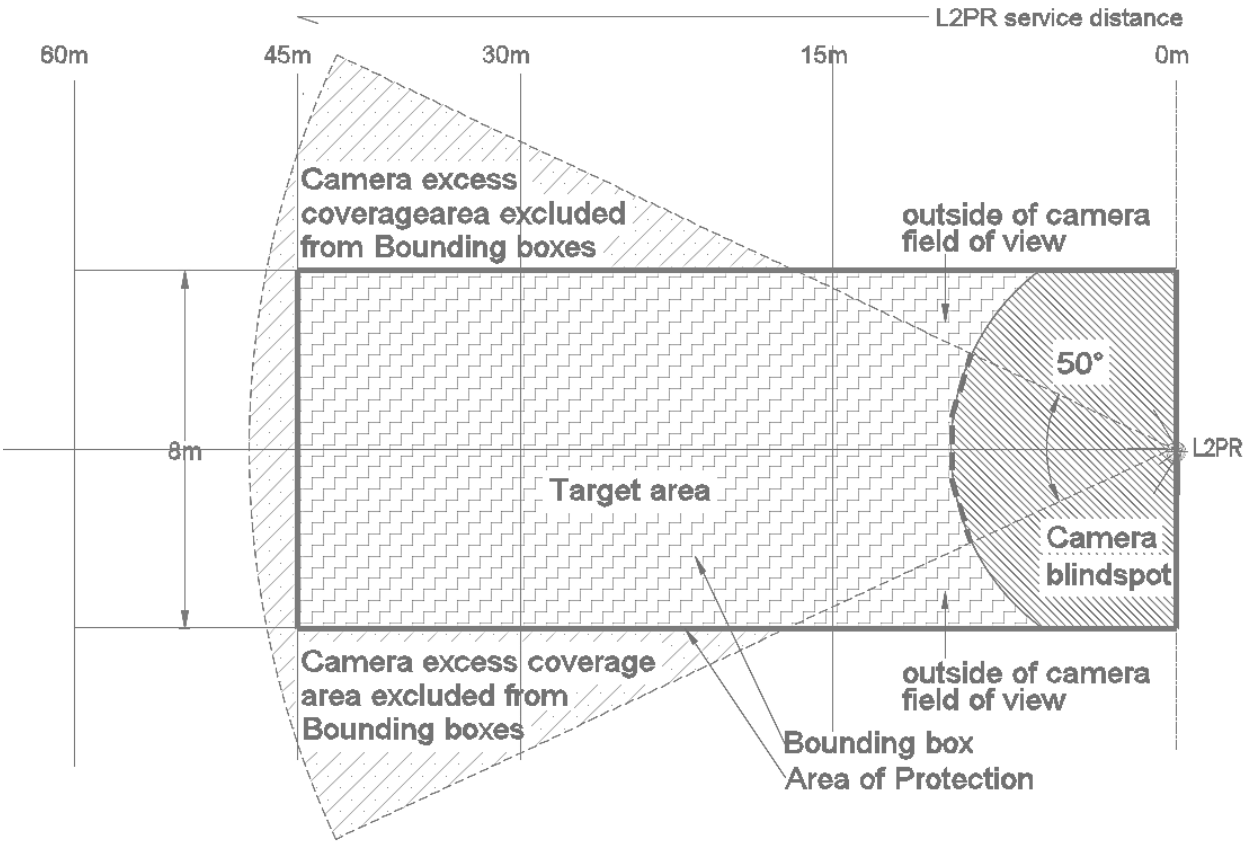

Figure 9: Plan view of Area of Protection (Camera lined to edge of Bounding Box illustrated)

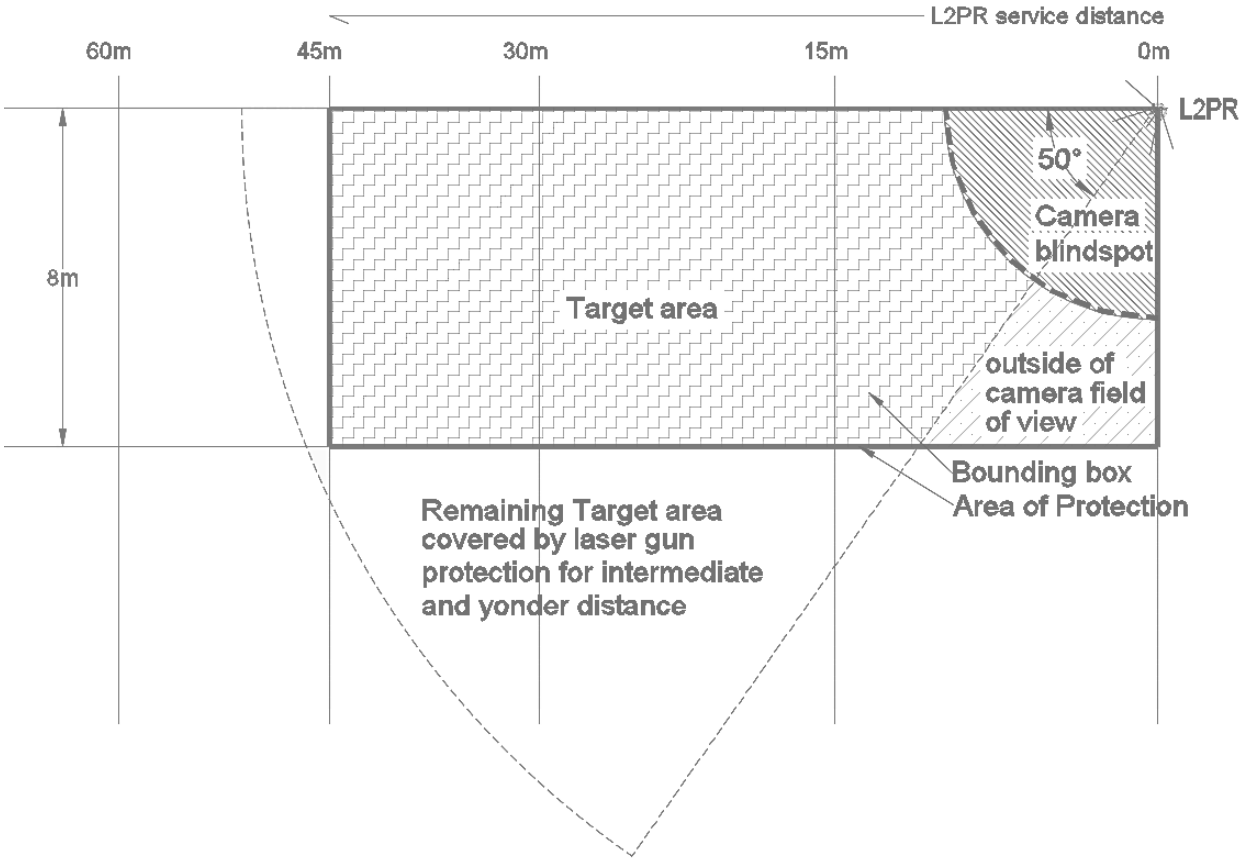

Figure 10: Section view of Area of Protection with two apparatus (Bounding Box illustrated)

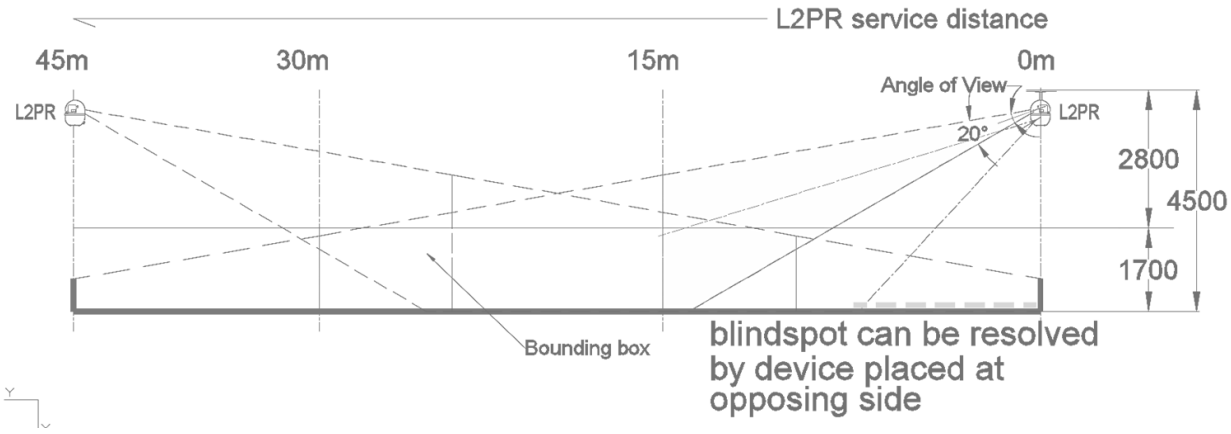


Figure 11: Plan view of Area of Protection with 2 apparatus (Bounding Box illustrated)

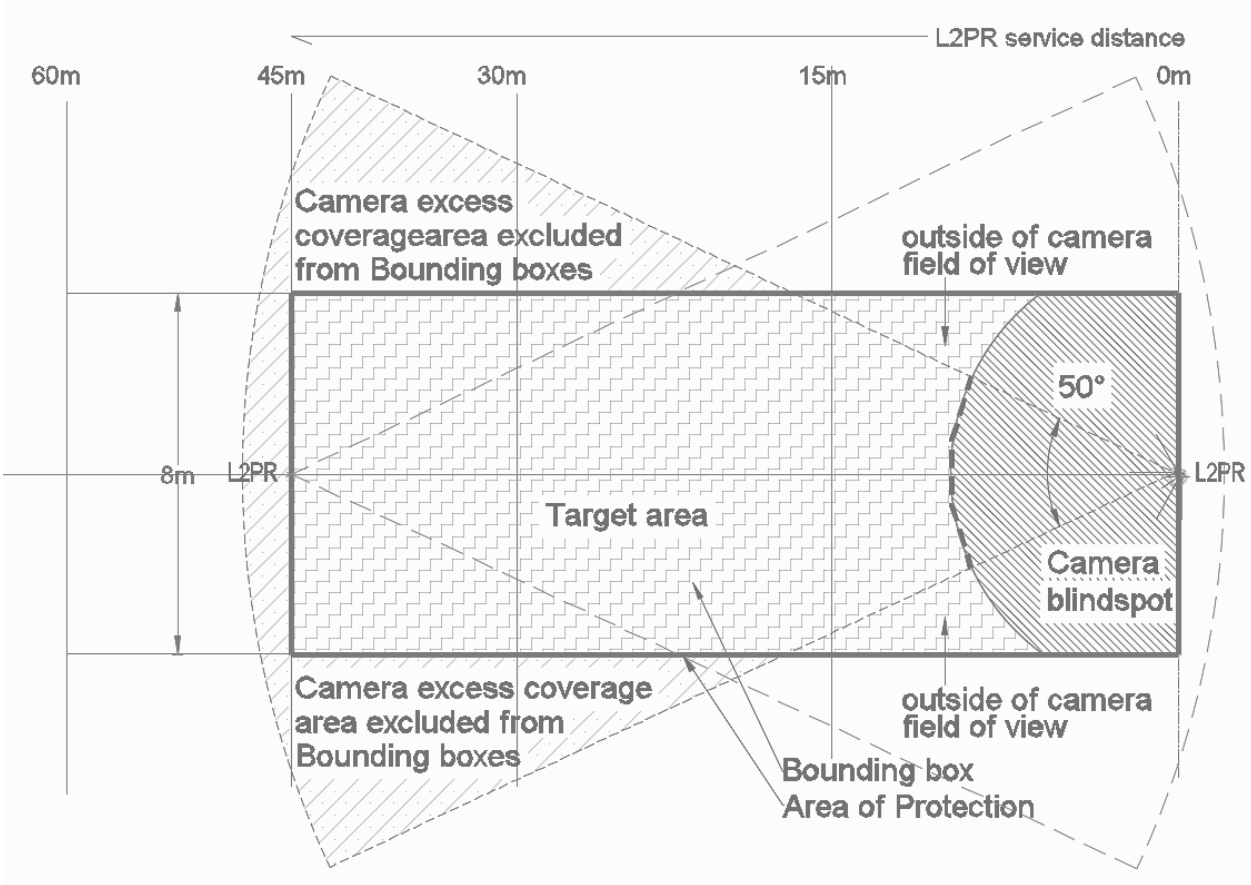

Figure 12: Section view of Area of Protection with Spot Target area (close distance illustrated)

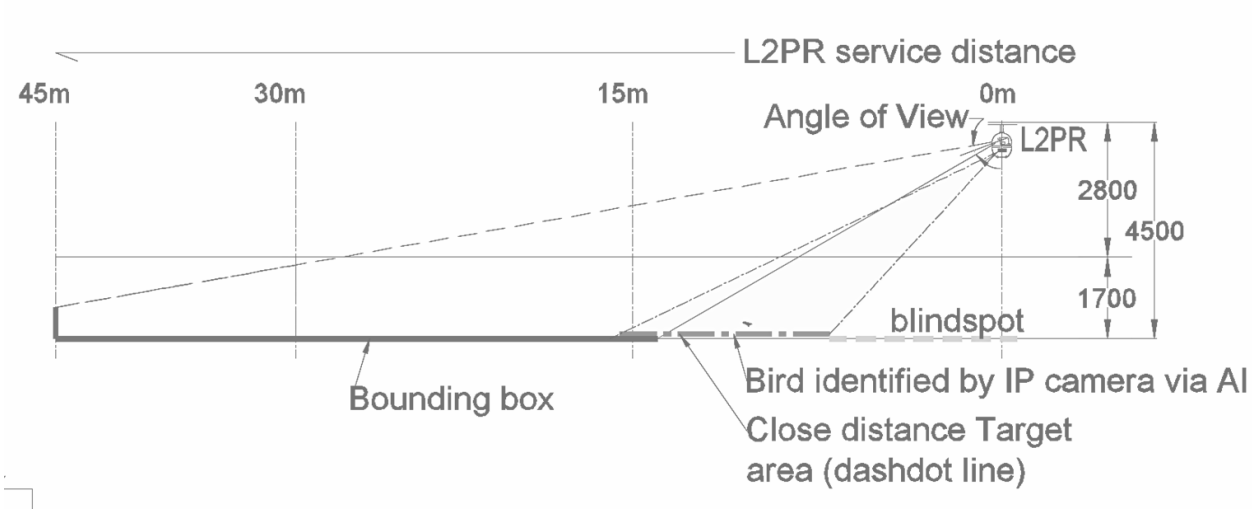


Figure 13: Plan view of Area of Protection with Spot Target area (close distance target area illustrated)

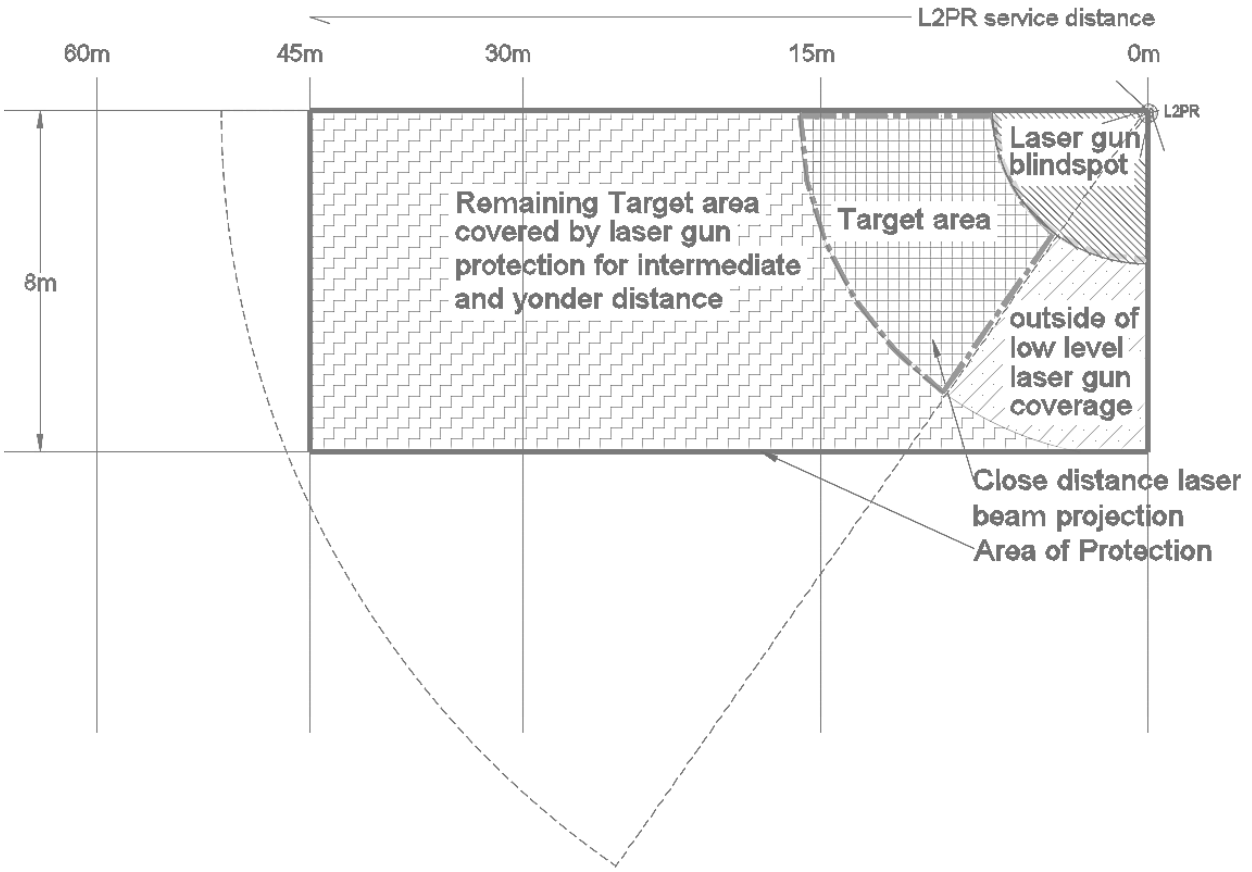

Figure 14 Section view of Area of Protection with Spot Target area (intermediate distance illustrated)

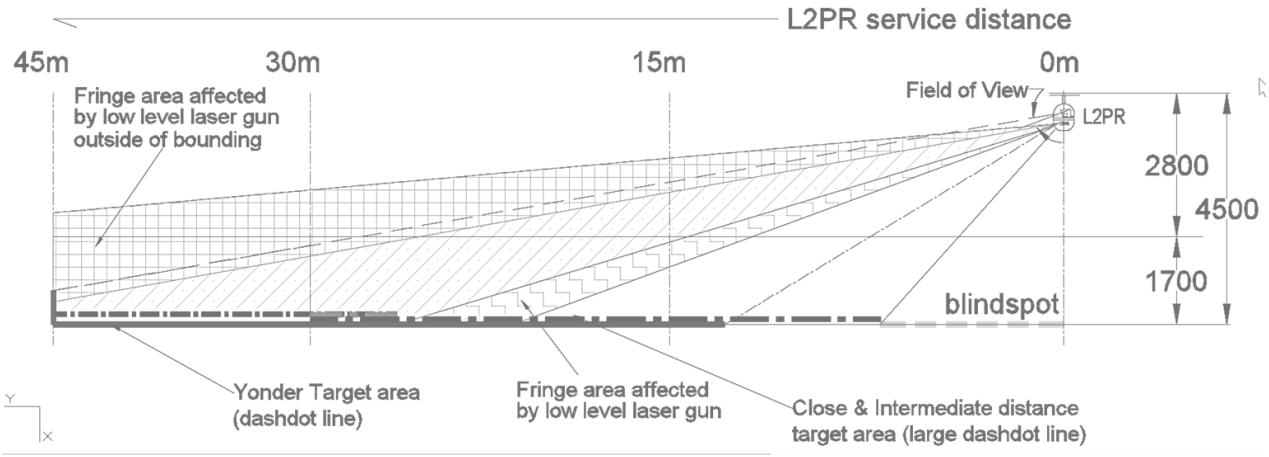


Figure 15 Plan view of Area of Protection with Spot Target area (intermediate distance illustrated)

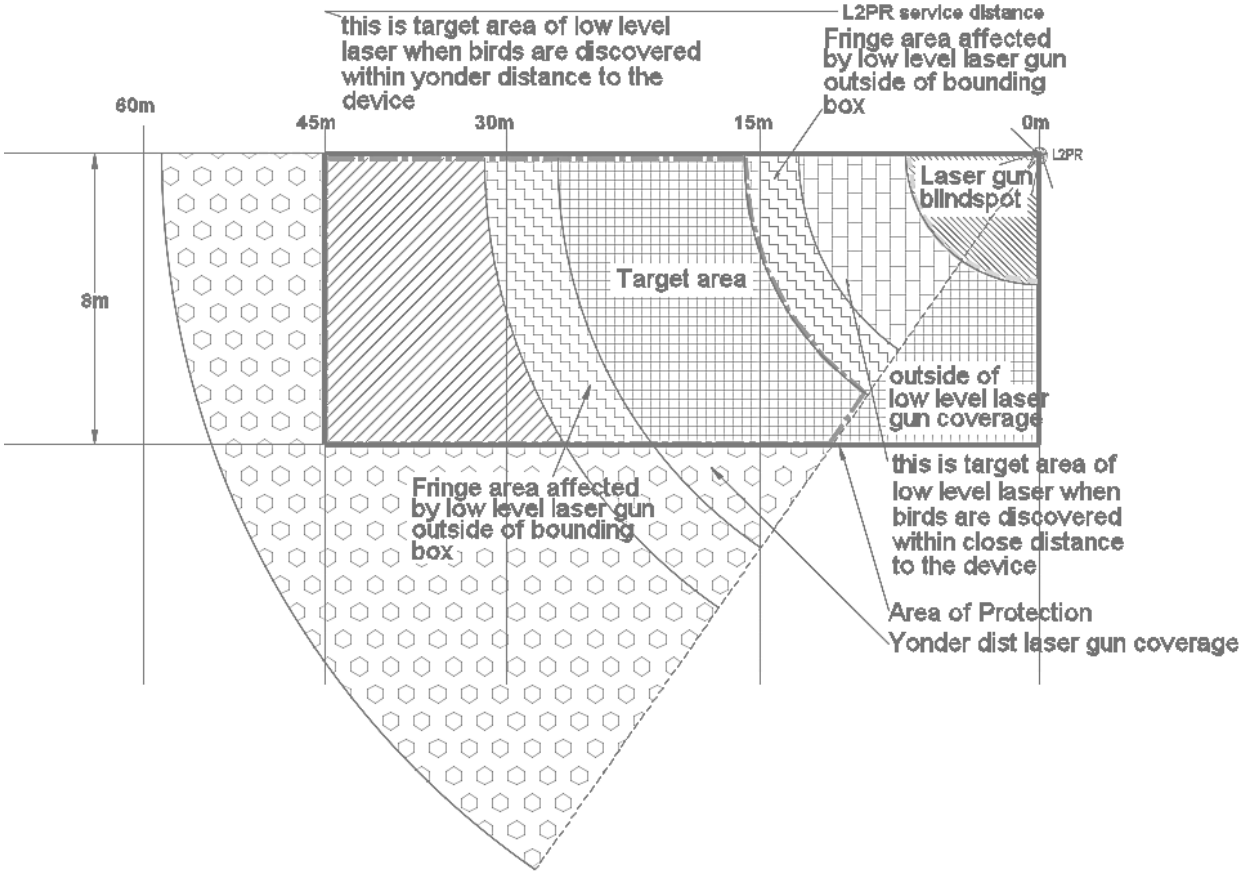

Figure 16 Section view of Area of Protection with Spot Target area (Yonder distance illustrated)

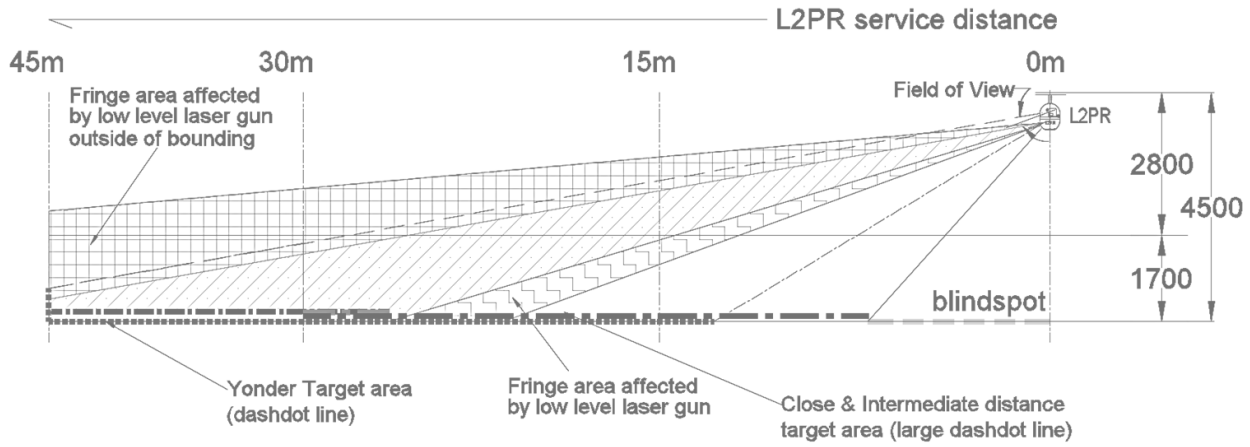


Figure 17 Plan view of Area of Protection with Spot Target area (Yonder distance illustrated)

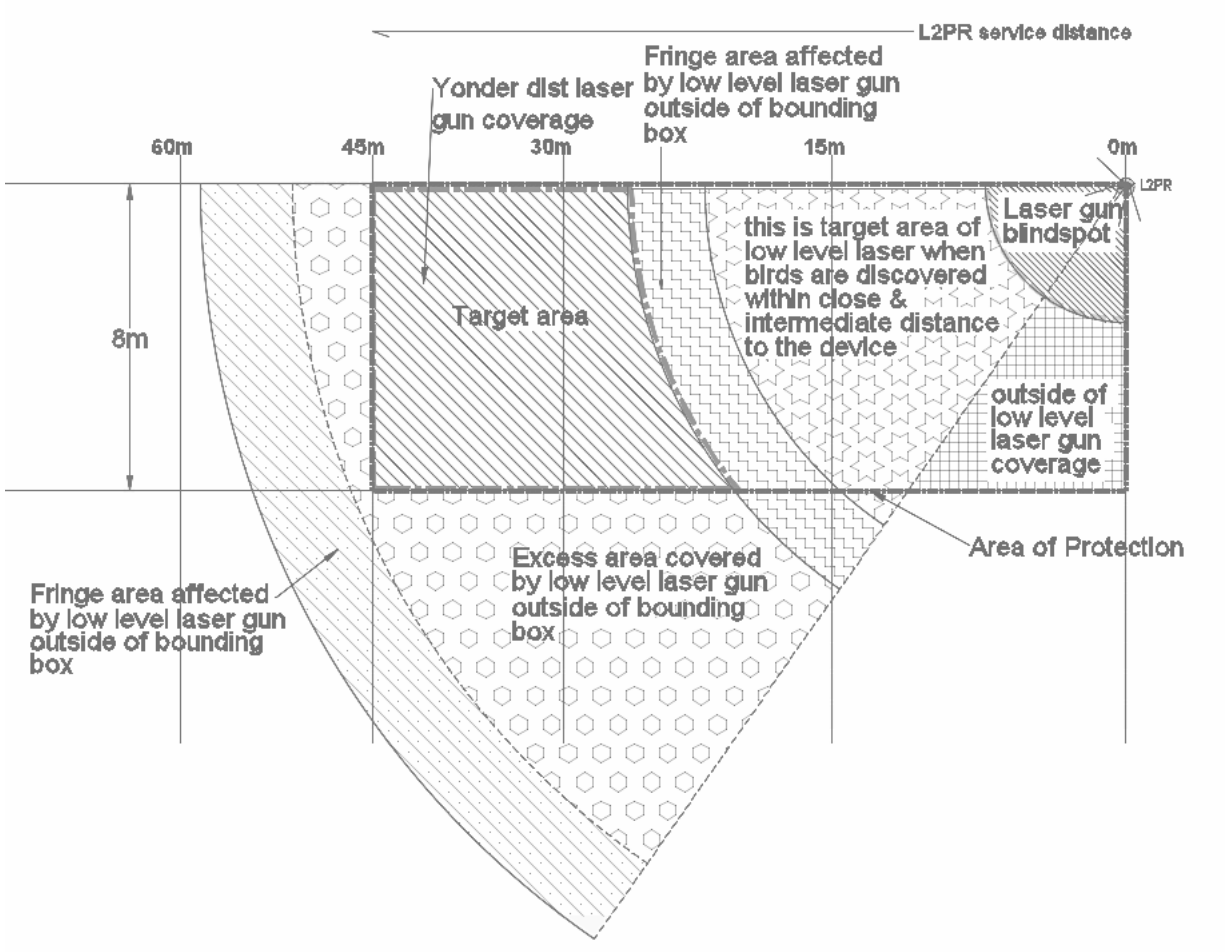

Figure 18 High level laser beam projection

