FIG. 1

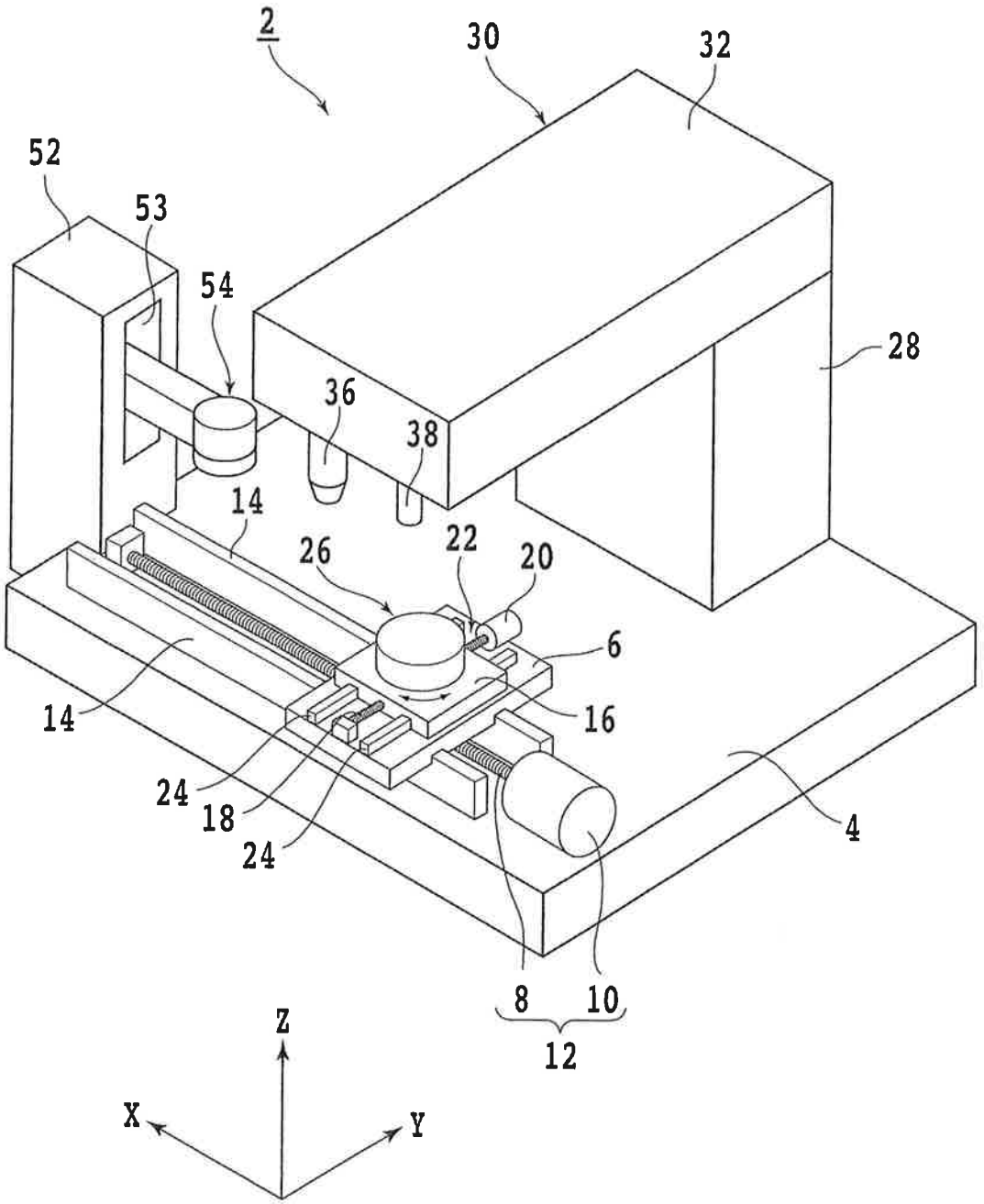

FIG. 2

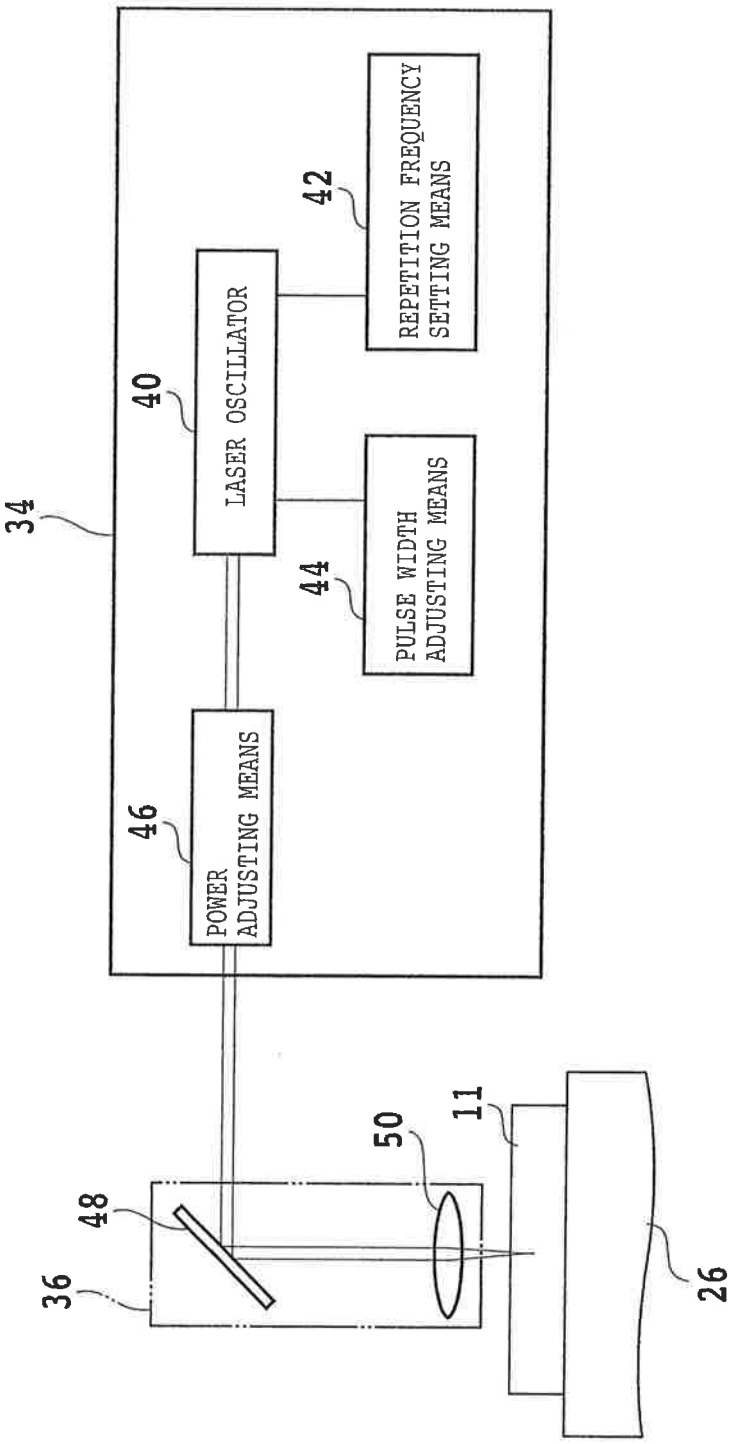
34
LASER OSCILLATOR
40
REPETITION FREQUENCY SETTING MEANS
42
PULSE WIDTH ADJUSTING MEANS
44
POWER ADJUSTING MEANS
46
36
48
50
11
26

FIG.3A

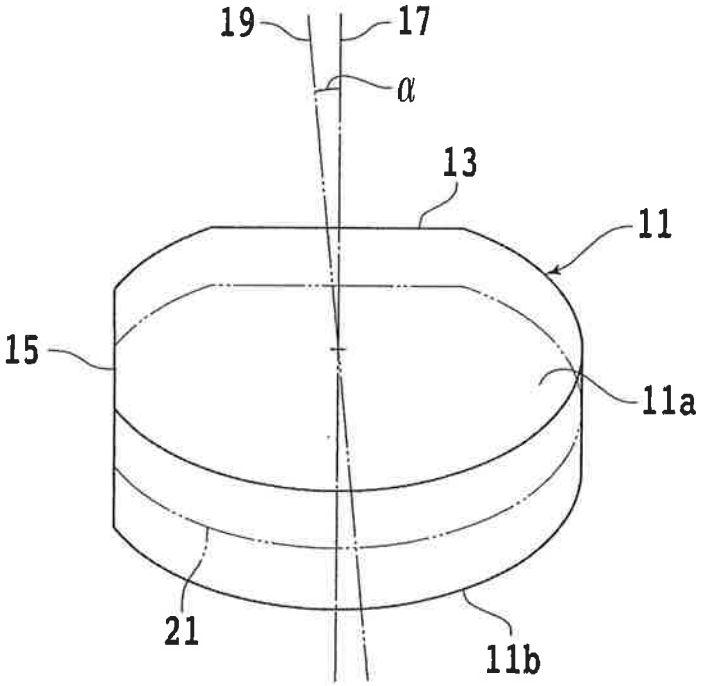

FIG.3B

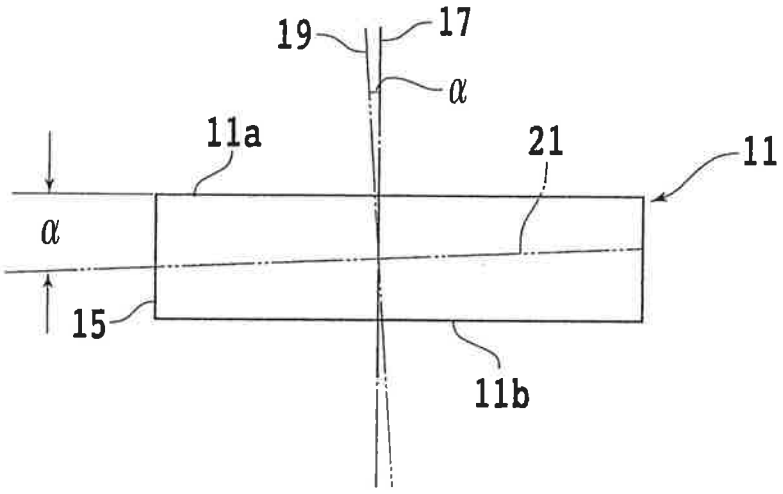

FIG. 4

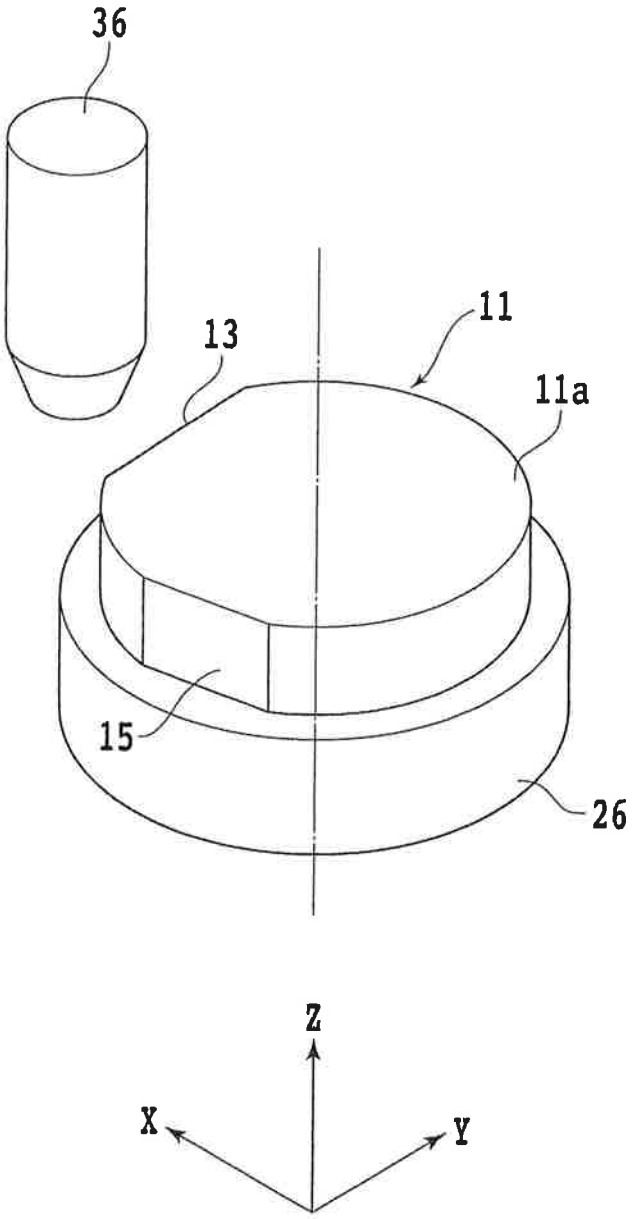

FIG.5

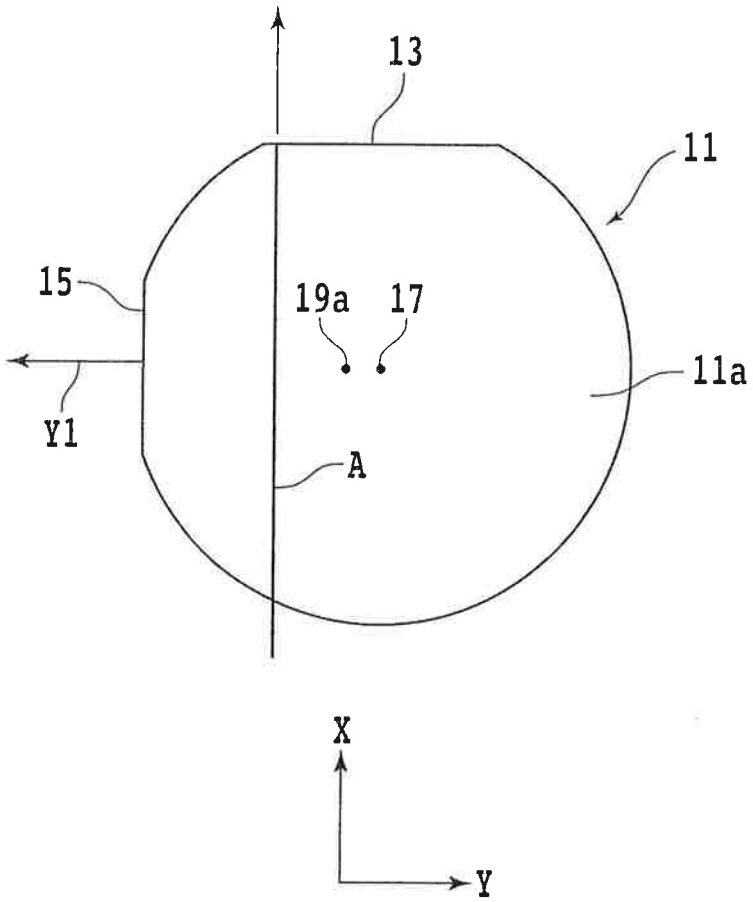

FIG.6

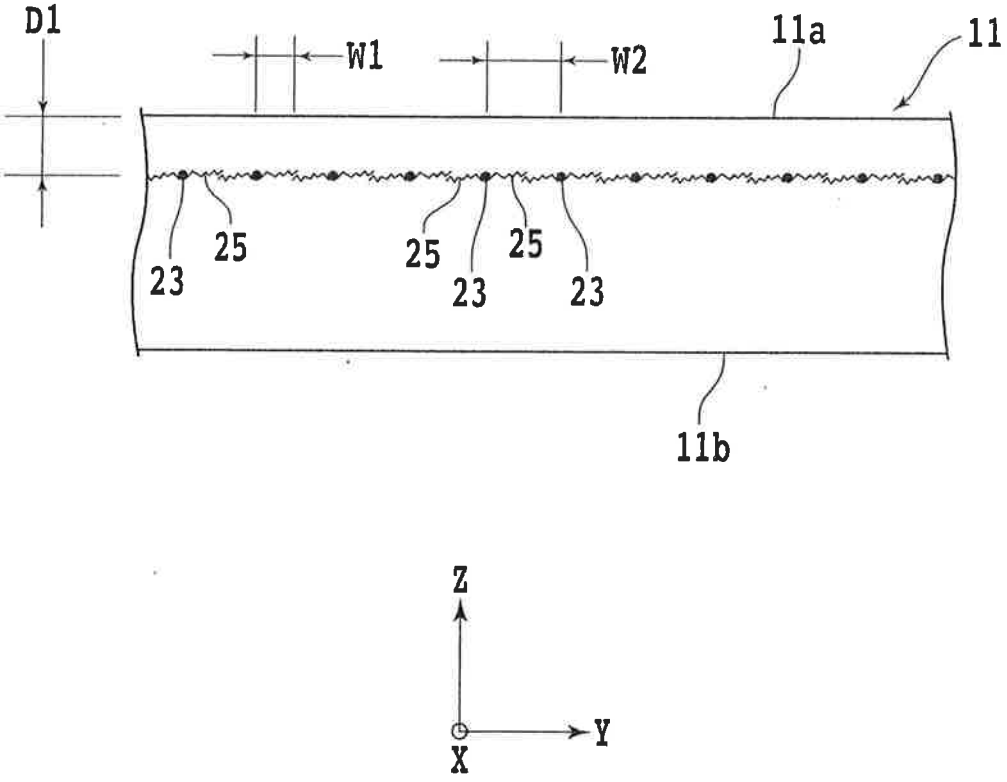

FIG.7

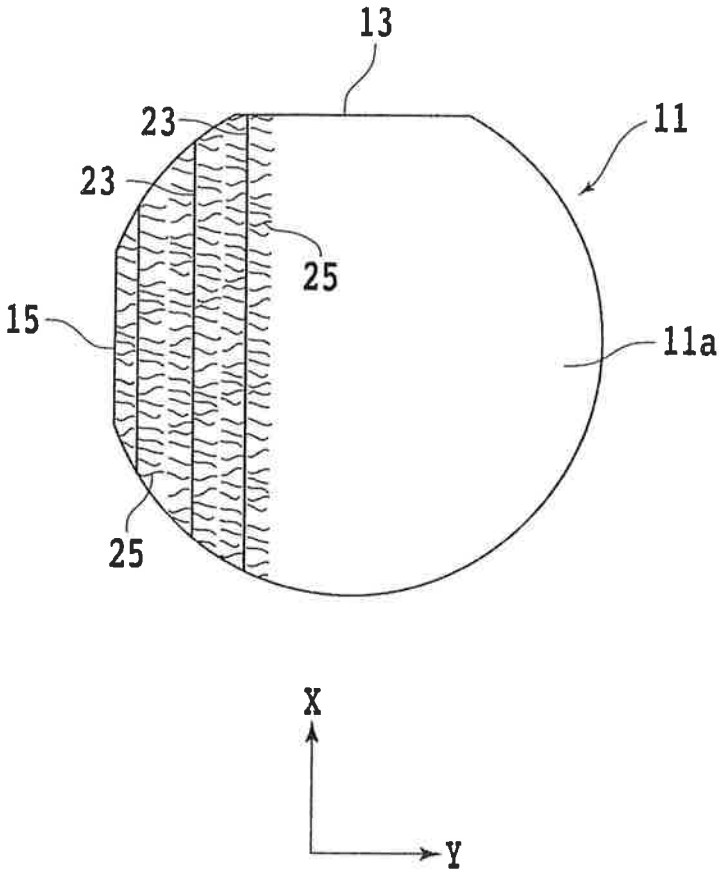

FIG.8A

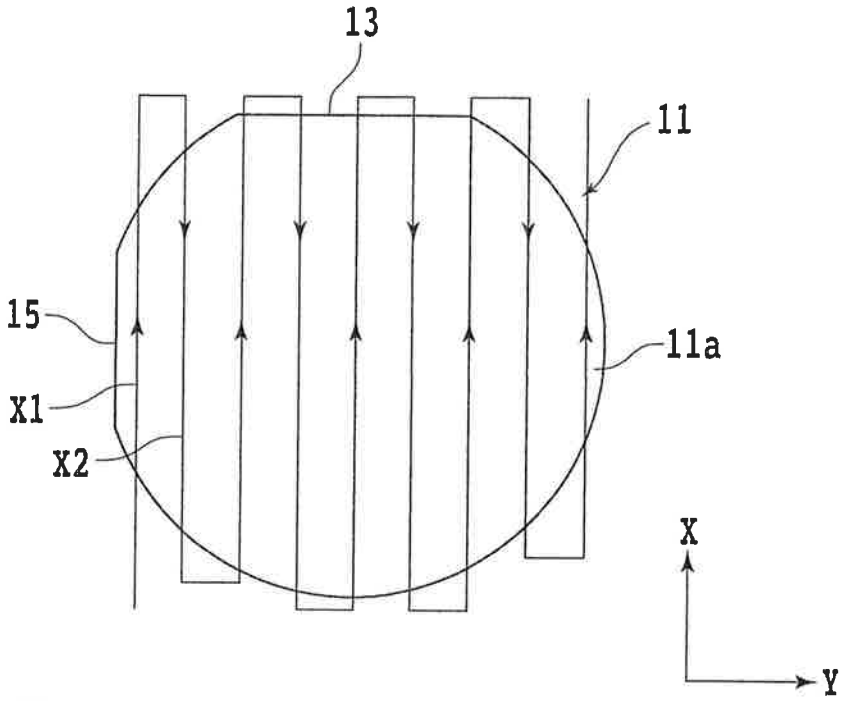

FIG.8B

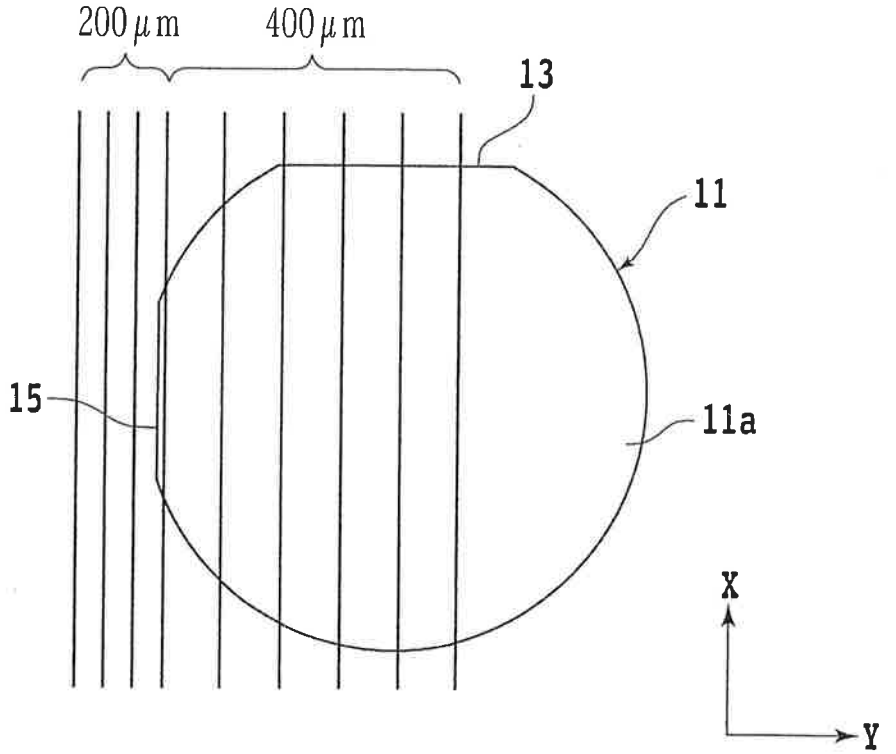

FIG.9

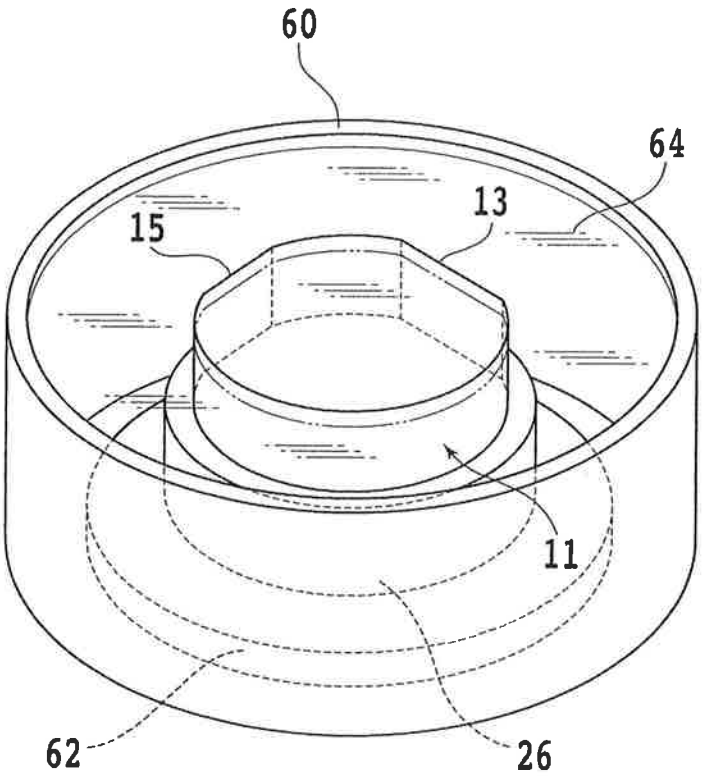

FIG. 10

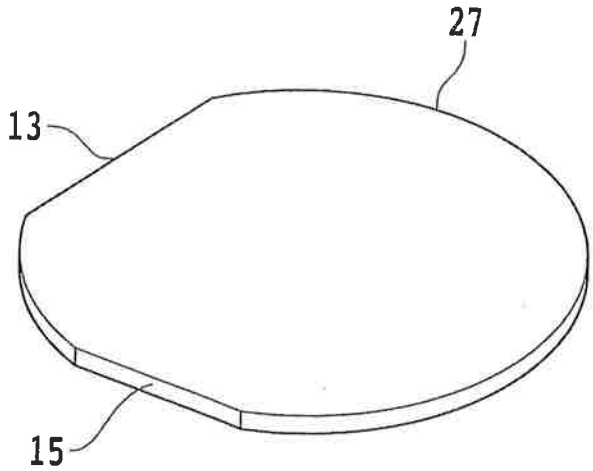

FIG.11A

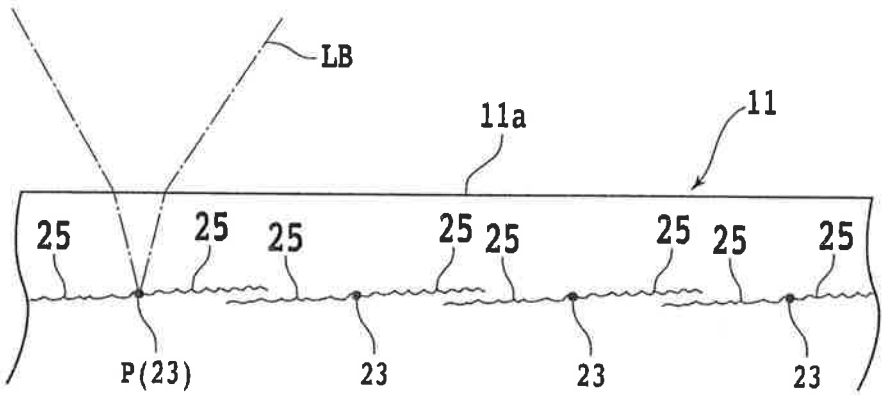

FIG.11B

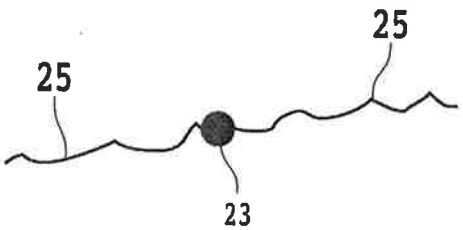

FIG.11C

