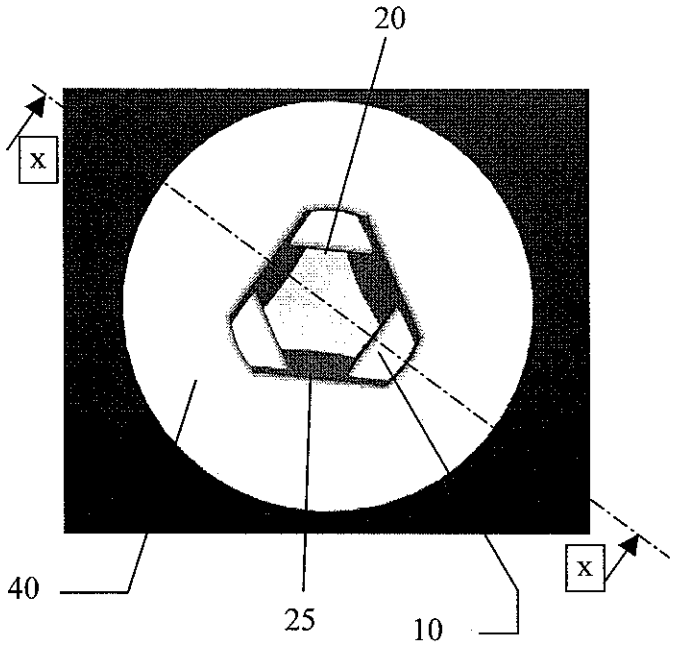

Figure 2

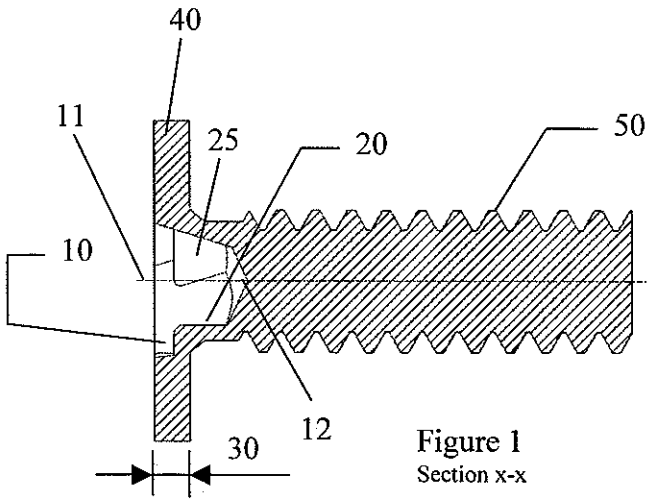

Figure 1
Section x-x

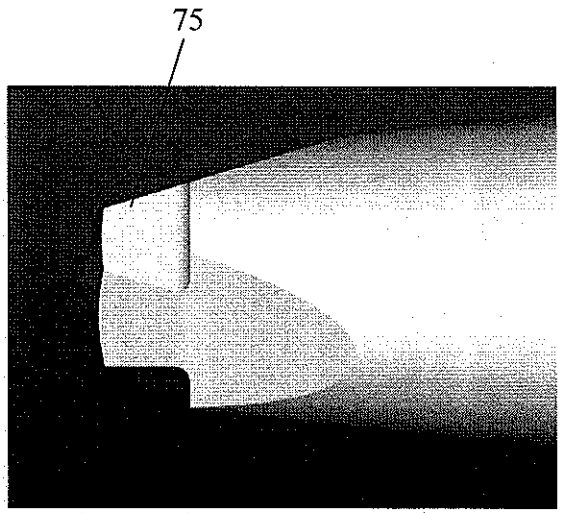

Figure 3

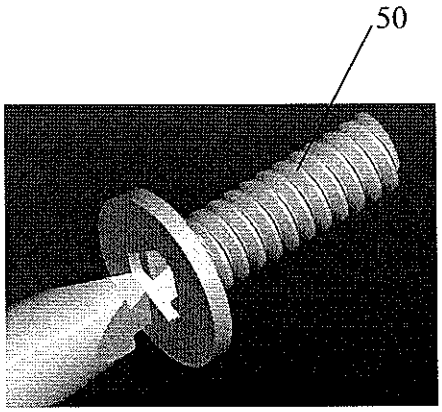

Figure 3a

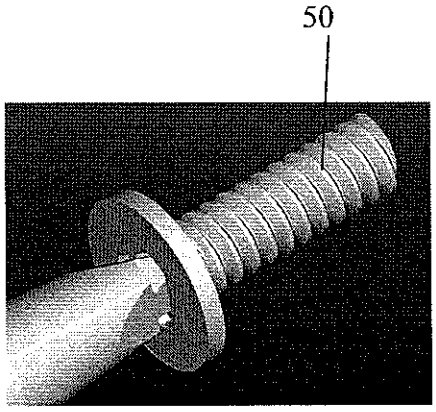

Figure 3b

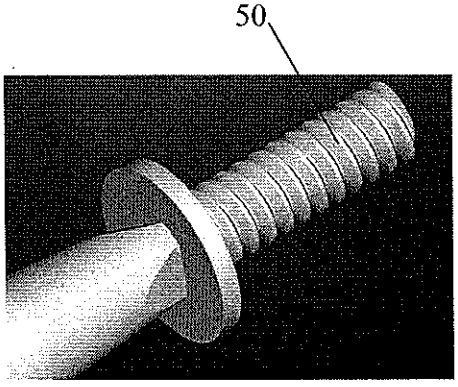

Figure 3c

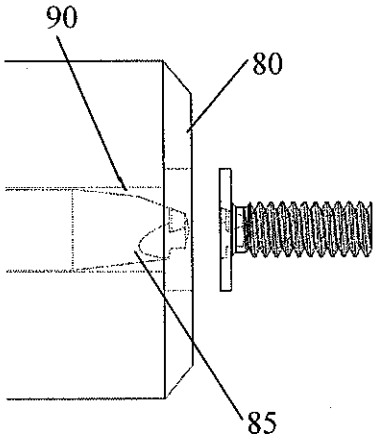

Figure 3d

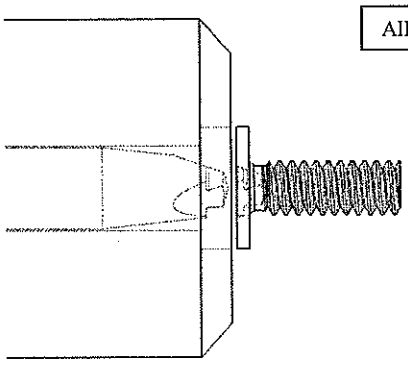

Figure 3e

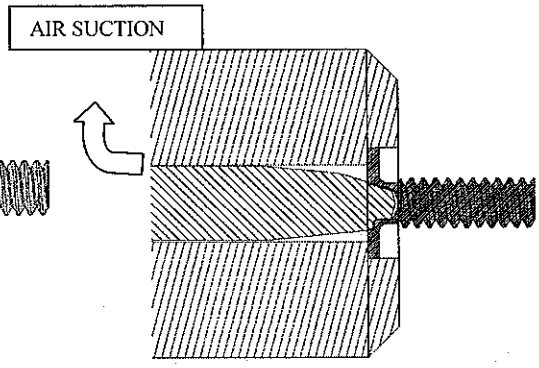

Figure 3f

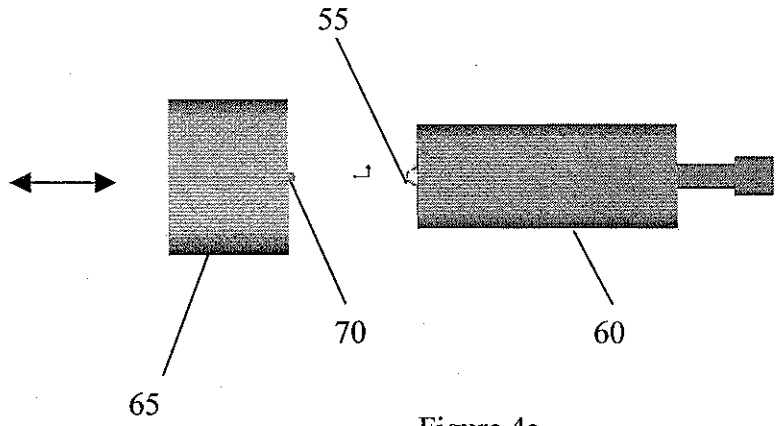

Figure 4a

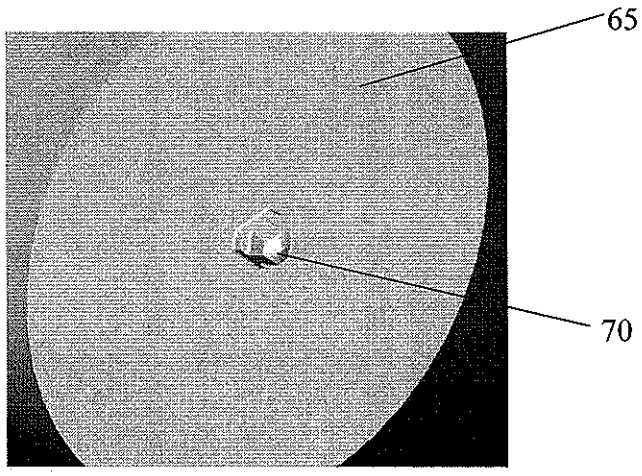

Figure 4b