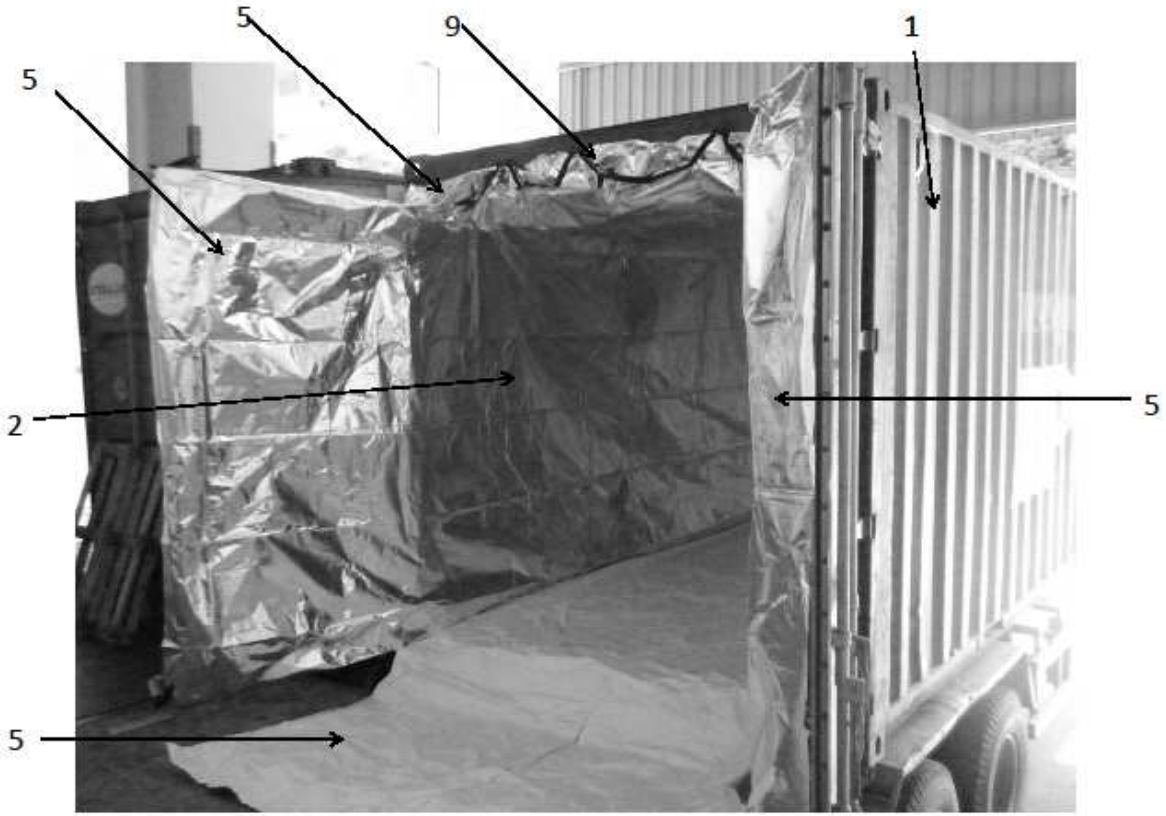

FIGURE 1

Encapsulate

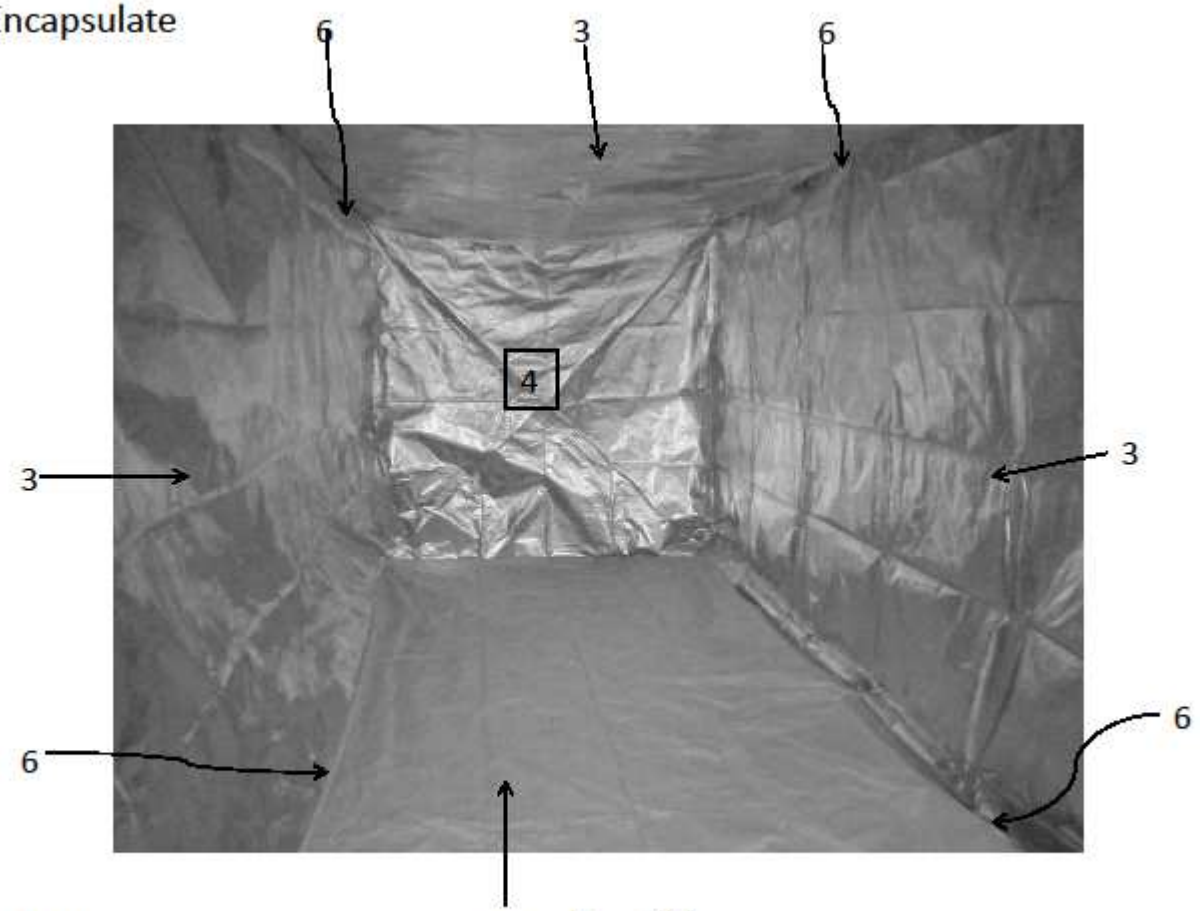

FIGURE 2

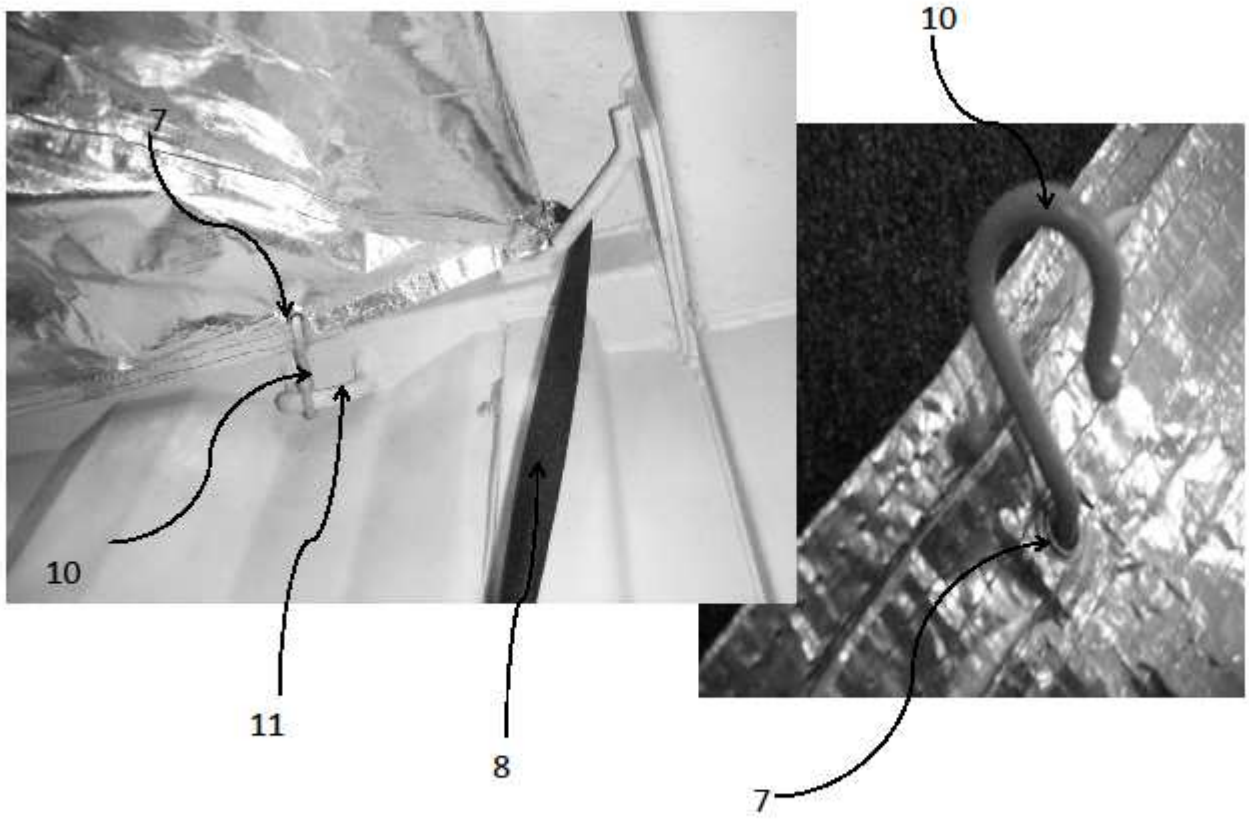

FIGURE 3

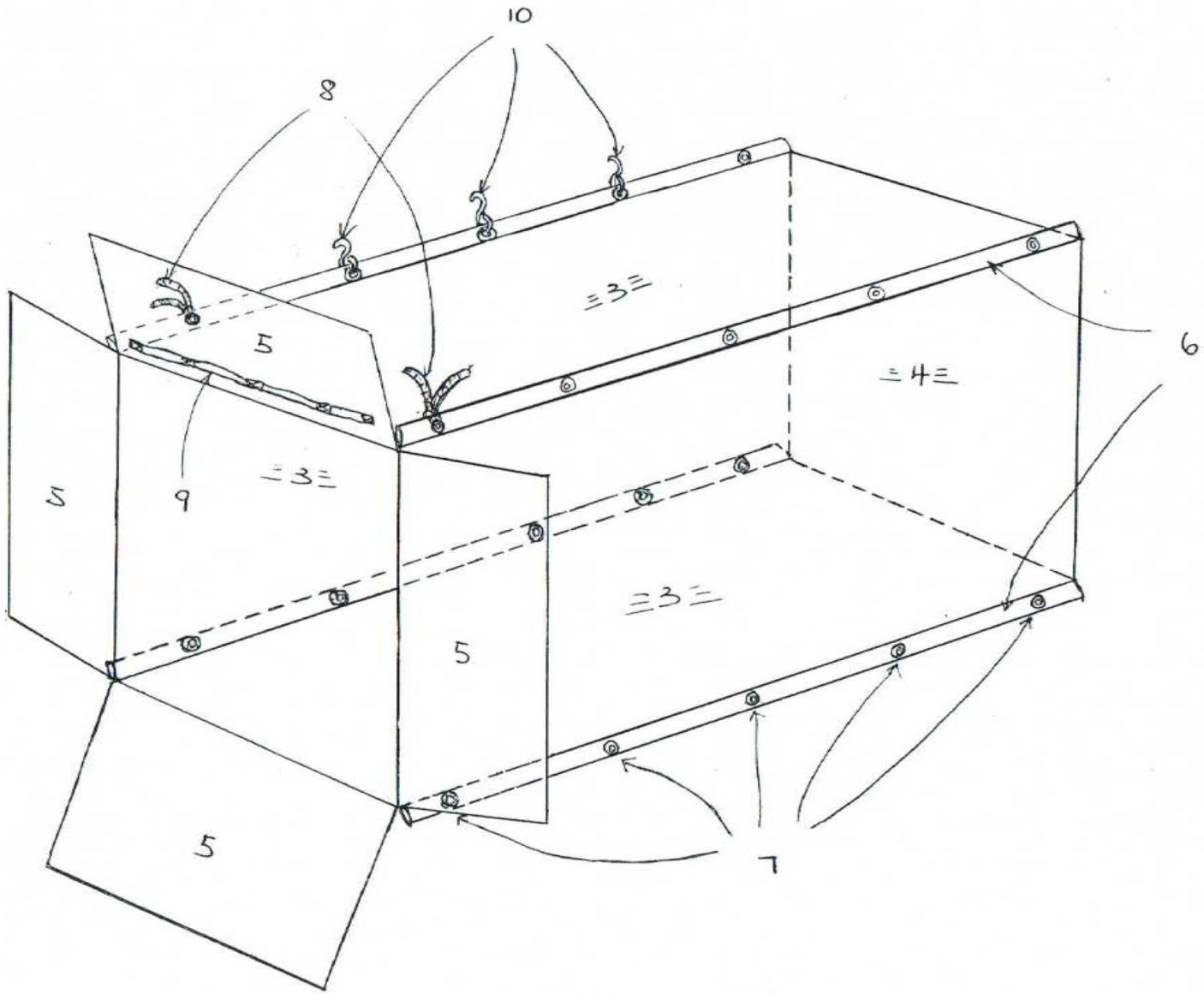

FIGURE 4