(12) INTERNATIONAL APPLICATION PUBLISHED UNDER THE PATENT COOPERATION TREATY (PCT)

(19) World Intellectual Property Organization
International Bureau

(43) International Publication Date
1 August 2002 (01.08.2002)

PCT

(10) International Publication Number
WO 02/059400 A2

(51) International Patent Classification[7]: C30B 15/00, 29/06, 15/20

(21) International Application Number: PCT/US02/01782

(22) International Filing Date: 22 January 2002 (22.01.2002)

(25) Filing Language: English

(26) Publication Language: English

(30) Priority Data:
60/264,415 26 January 2001 (26.01.2001) US

(71) Applicant: **MEMC ELECTRONIC MATERIALS, INC.** [US/US]; P.O. Box 8, 501 Pearl Drive, St. Peters, MO 63376 (US).

(72) Inventors: **KIM, Chang, Bum**; MEMC Electronic Materials, Inc., 501 Pearl Drive, P.O. Box 8, St. Peters, MO 63376 (US). **KIMBEL, Steven, L.**; MEMC Electronic Materials, Inc., 501 Pearl Drive, P.O. Box 8, St. Peters, MO 63376 (US). **LIBBERT, Jeffrey, L.**; MEMC Electronic Materials, Inc., 501 Pearl Drive, P.O. Box 8, St. Peters, MO 63376 (US). **BANAN, Mohsen**; MEMC Electronic Materials, Inc., 501 Pearl Drive, P.O. Box 8, St. Peters, MO 63376 (US).

(74) Agents: **ALLEN, Derick, E.** et al.; One Metropolitan Square, Suite 1600, St. Louis, MO 63102 (US).

(81) Designated States *(national)*: CN, JP, KR, SG.

(84) Designated States *(regional)*: European patent (AT, BE, CH, CY, DE, DK, ES, FI, FR, GB, GR, IE, IT, LU, MC, NL, PT, SE, TR).

Published:
— *without international search report and to be republished upon receipt of that report*

[Continued on next page]

(54) Title: LOW DEFECT DENSITY SILICON HAVING A VACANCY-DOMINATED CORE SUBSTANTIALLY FREE OF OXIDATION INDUCED STACKING FAULTS

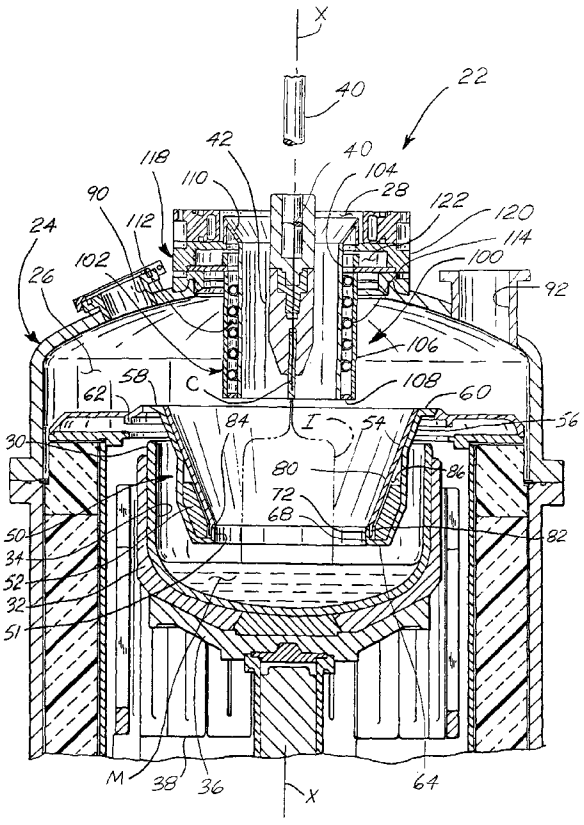

(57) Abstract: The present invention relates to a process for preparing a single crystal silicon ingot, as well as to the ingot or wafer resulting therefrom. The process comprises controlling (i) a growth velocity, v, (ii) an average axial temperature gradient, G_0, and (iii) a cooling rate of the crystal from solidification to about 750 °C, in order to cause the formation of a segment having a first axially symmetric region extending radially inward from the lateral surface of the ingot wherein silicon self-interstitials are the predominant intrinsic point defect, and a second axially symmetric region extending radially inward from the first and toward the central axis of the ingot. The process is characterized in that v, G_0 and the cooling rate are controlled to prevent the formation of agglomerated intrinsic point defects in the first region, while the cooling rate is further controlled to limit the formation of oxidation induced stacking faults in a wafer derived from this segment, upon subjecting the wafer to an oxidation treatment otherwise suitable for the formation of such faults.

WO 02/059400 A2

For two-letter codes and other abbreviations, refer to the "Guidance Notes on Codes and Abbreviations" appearing at the beginning of each regular issue of the PCT Gazette.