FIG. 1

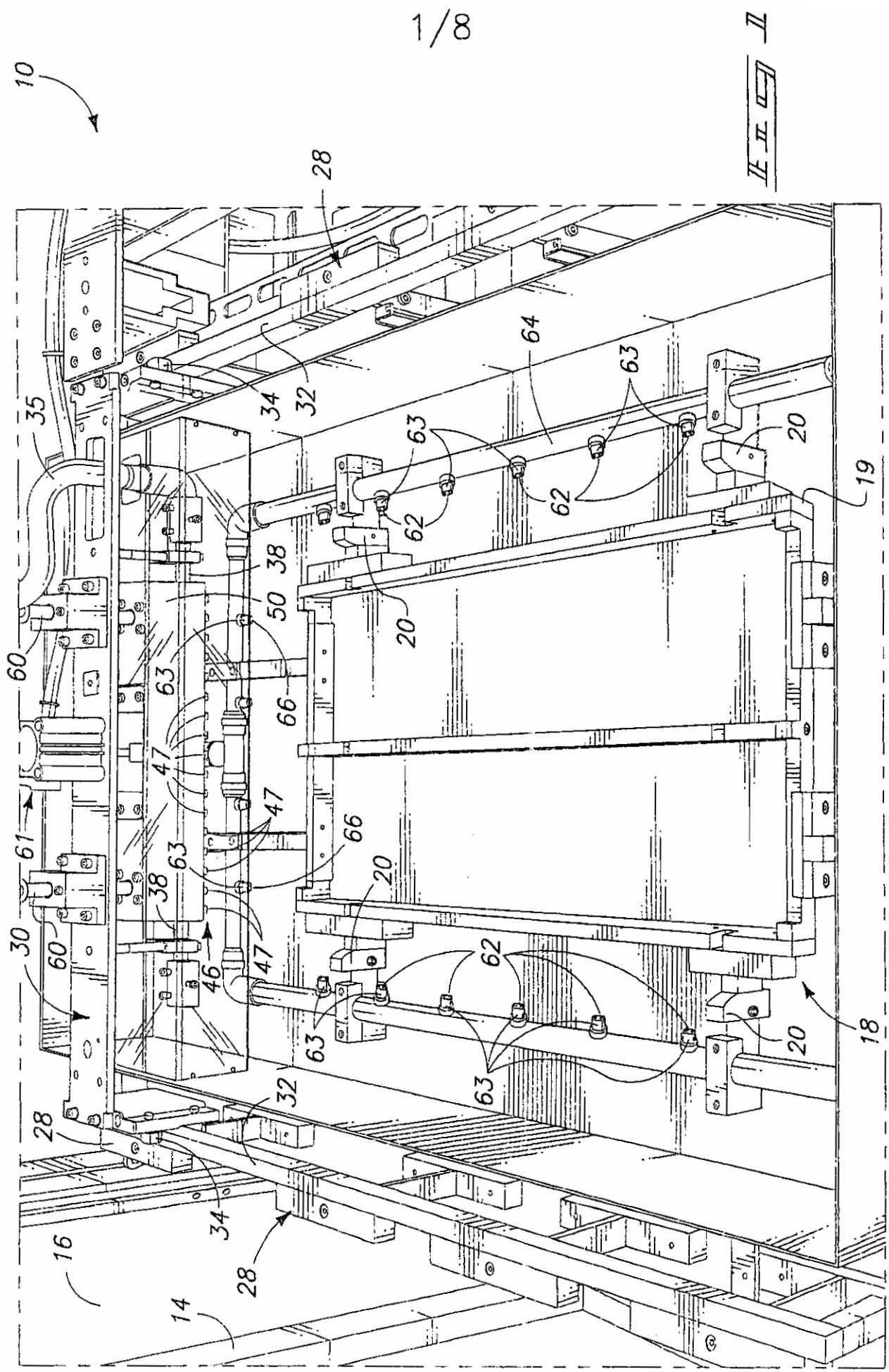

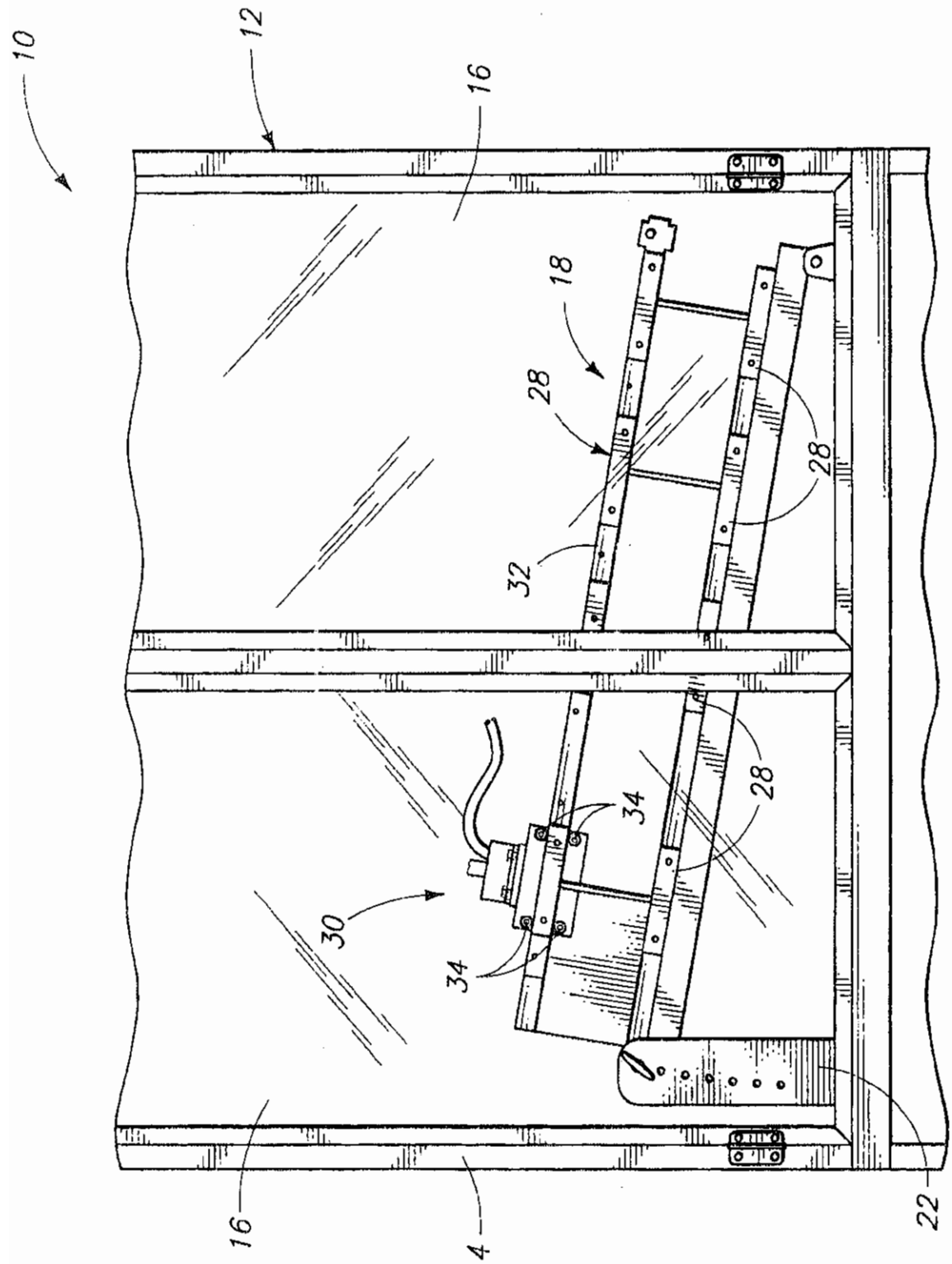

Fig 2

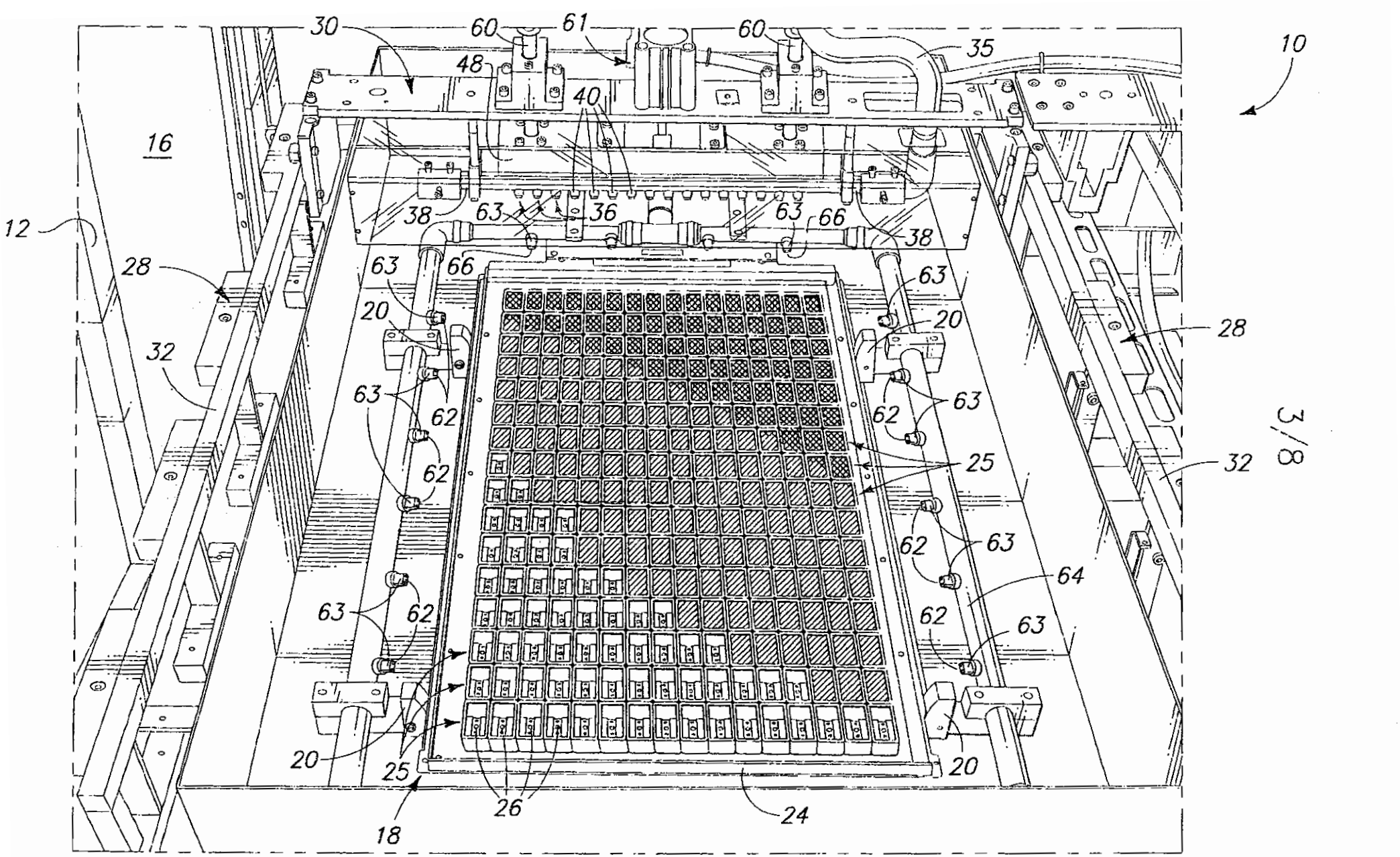

Fig 3

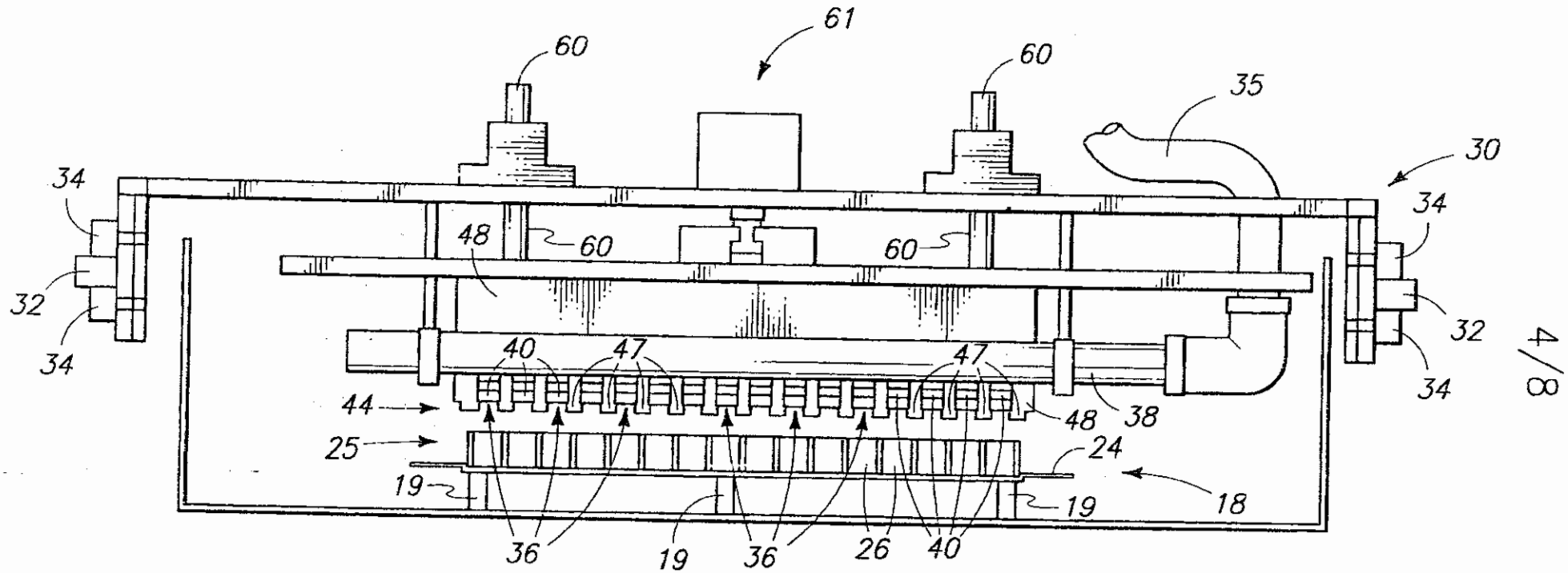
61
60
60
35
30
34
34
48
60
60
32
34
32
34
40
47
47
44
48
38
25
24
19
18
19
19
36
36
26
40

Fig 4

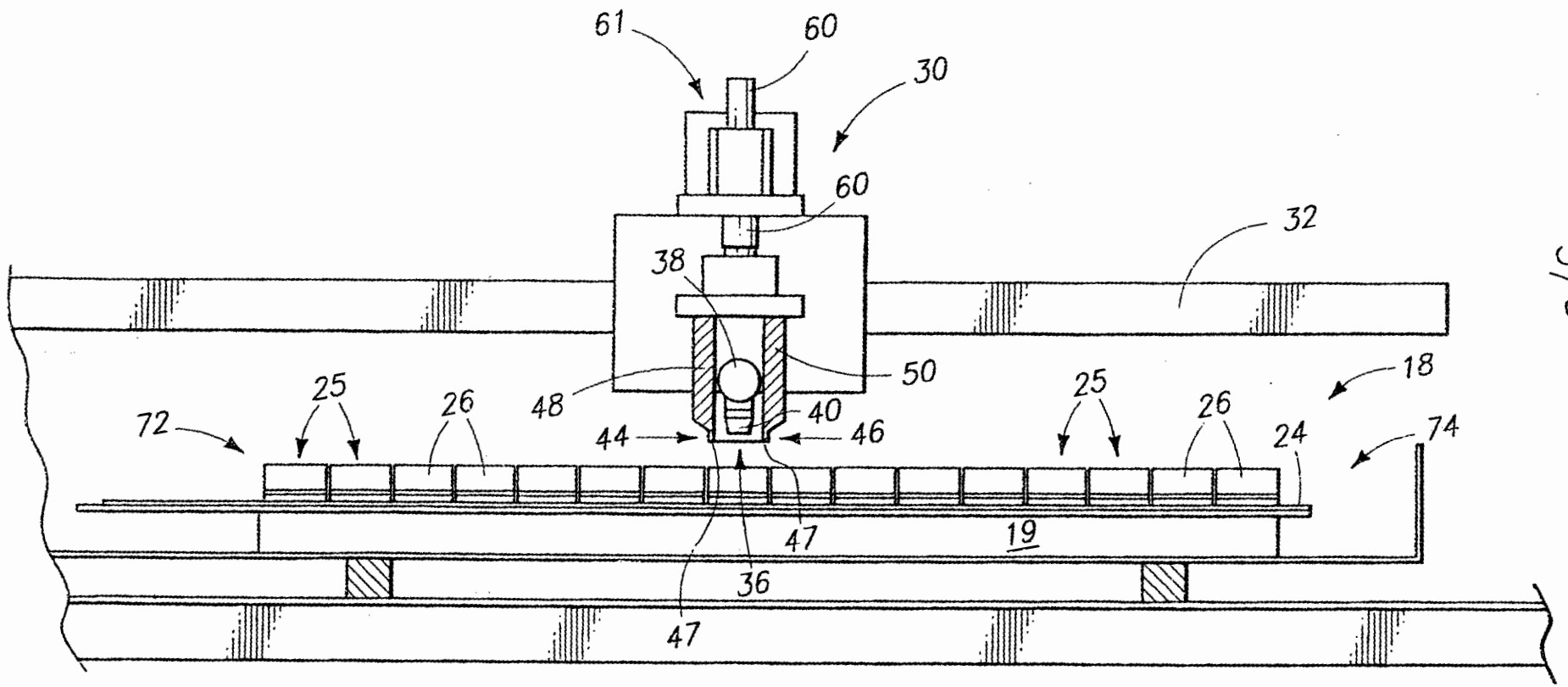

FIG 5

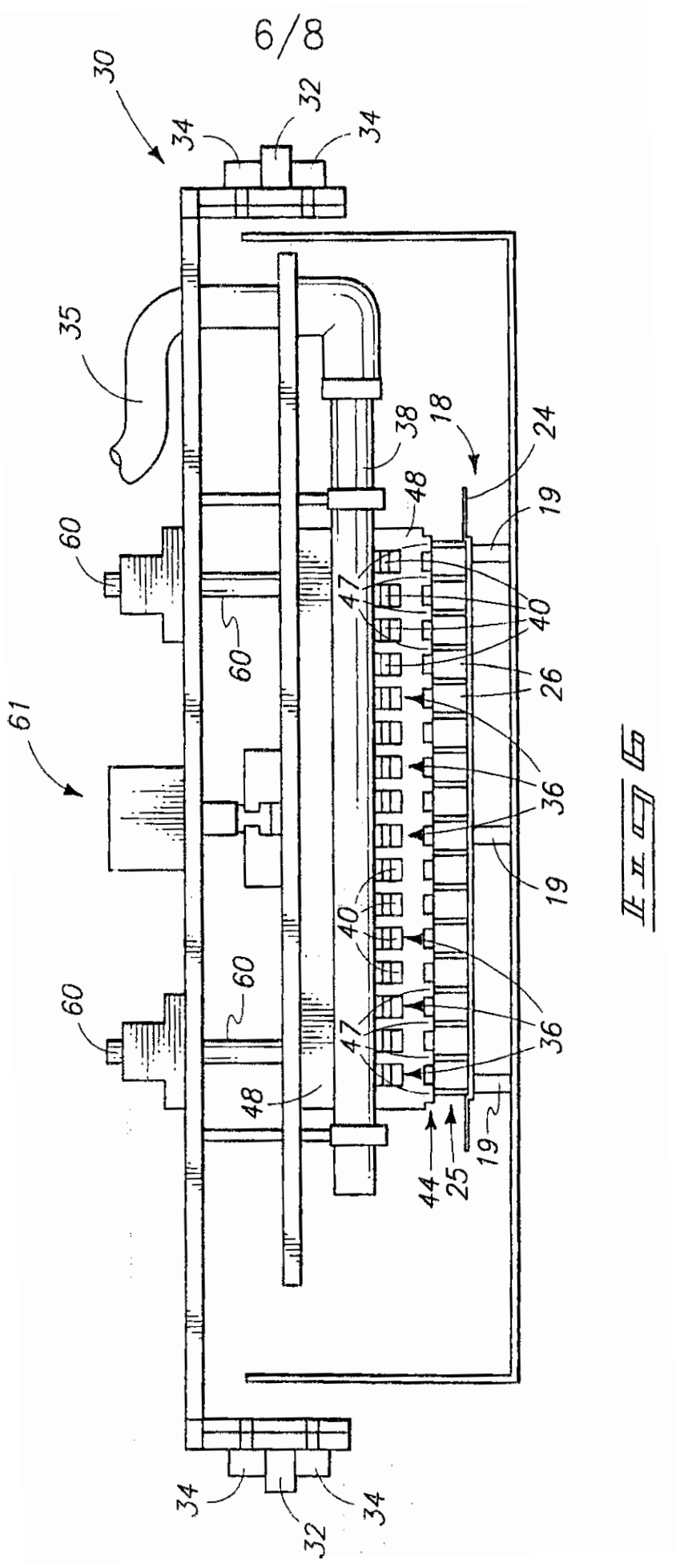
30
32
34
34
35
38
18
24
48
19
60
47
40
60
26
61
36
19
40
60
47
36
48
19
44
25
34
32
34

Fig 5

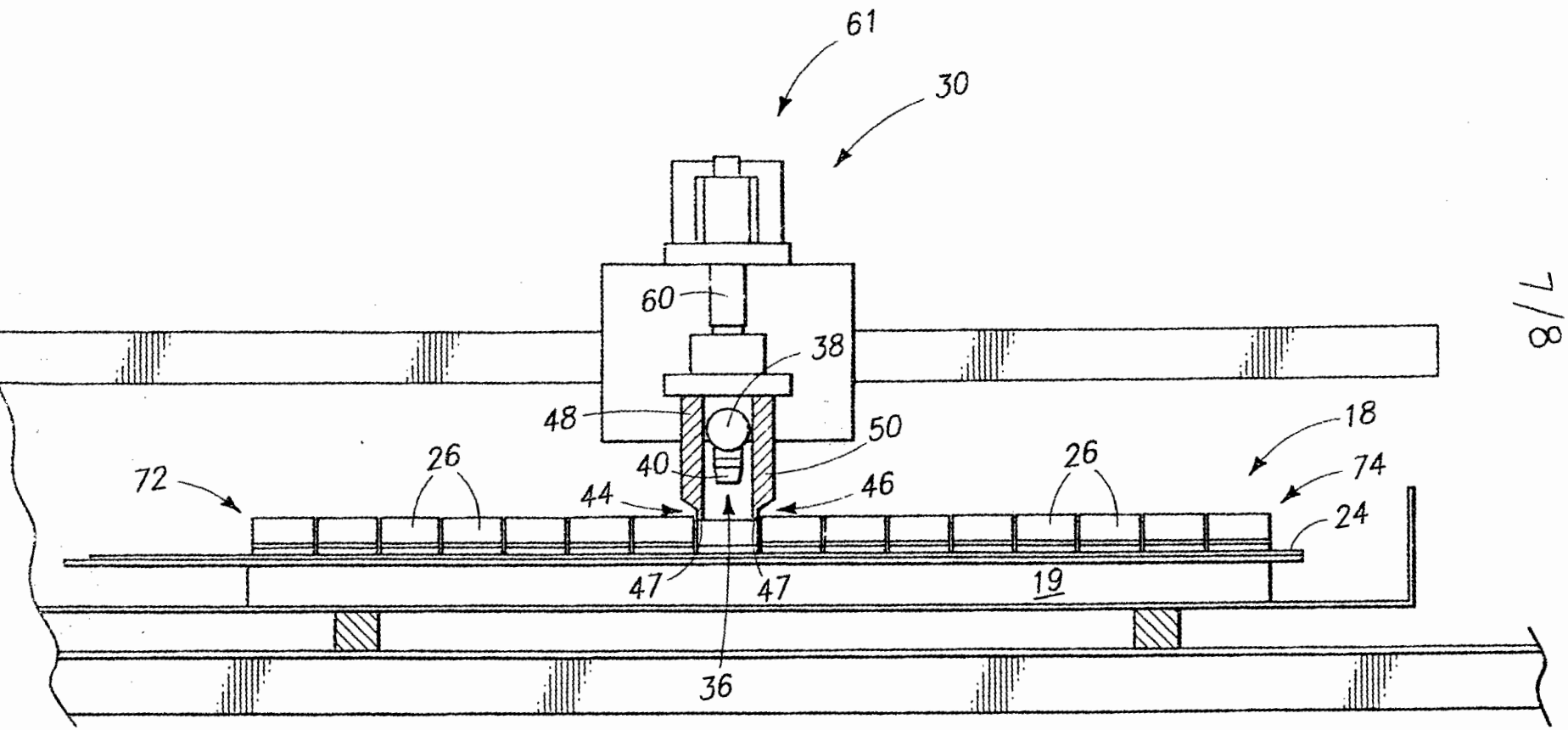

Fig 7

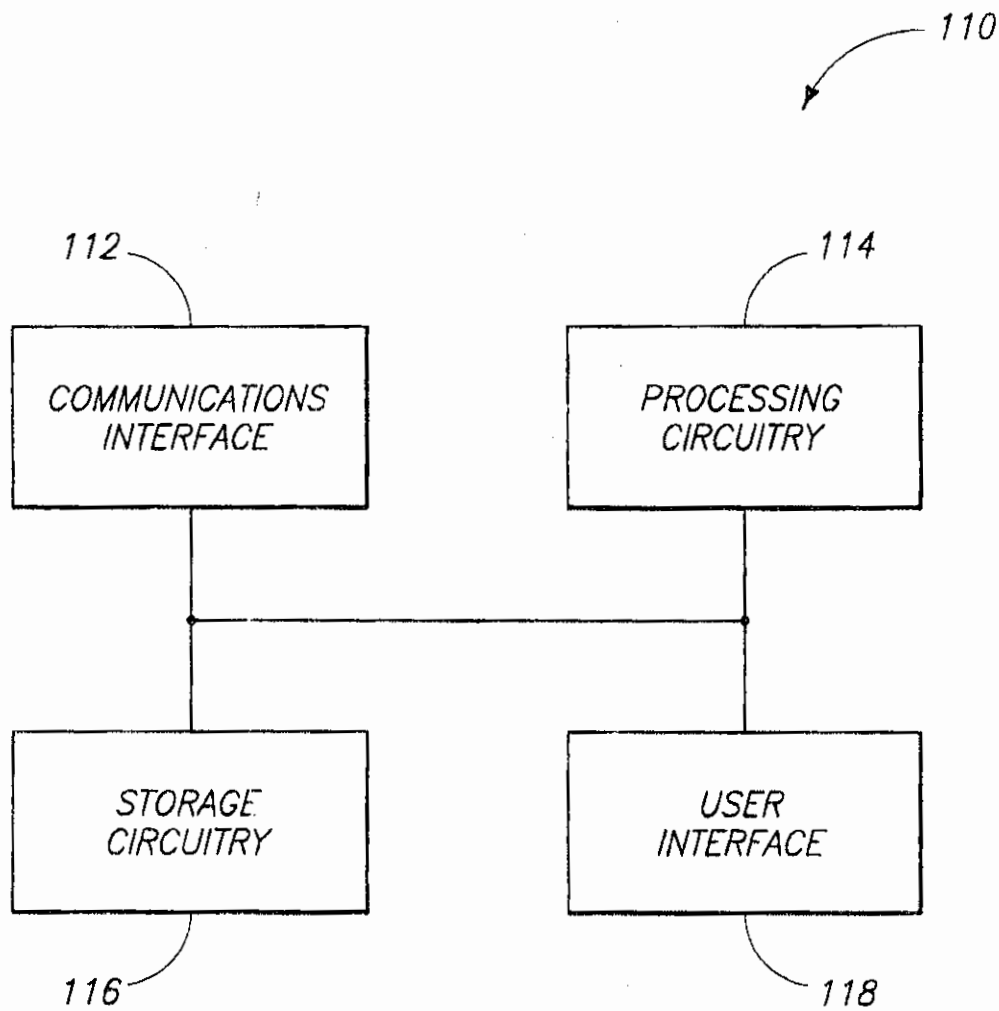
110
112
COMMUNICATIONS INTERFACE
114
PROCESSING CIRCUITRY
STORAGE CIRCUITRY
116
USER INTERFACE
118

Fig 8B