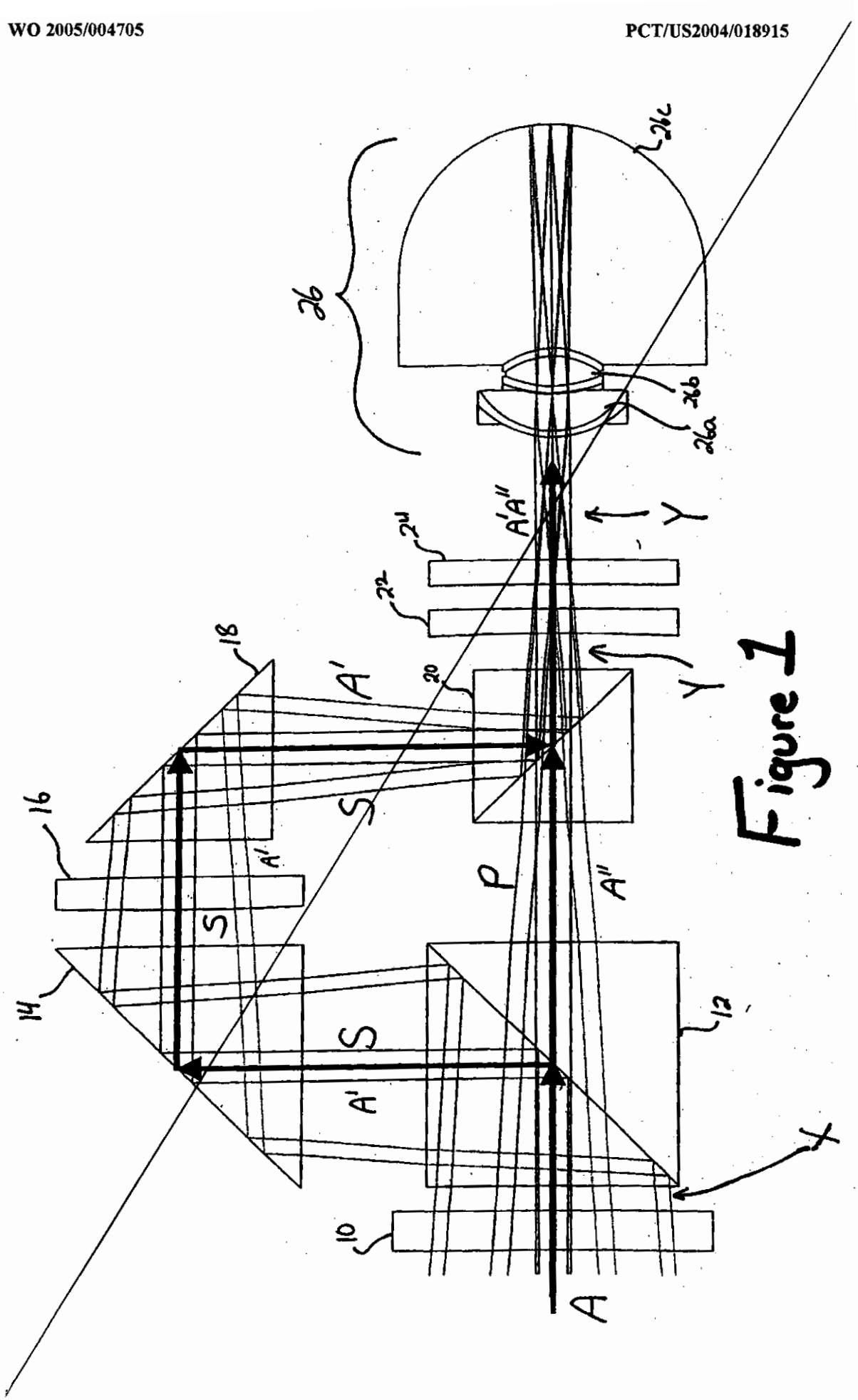

Figure 1

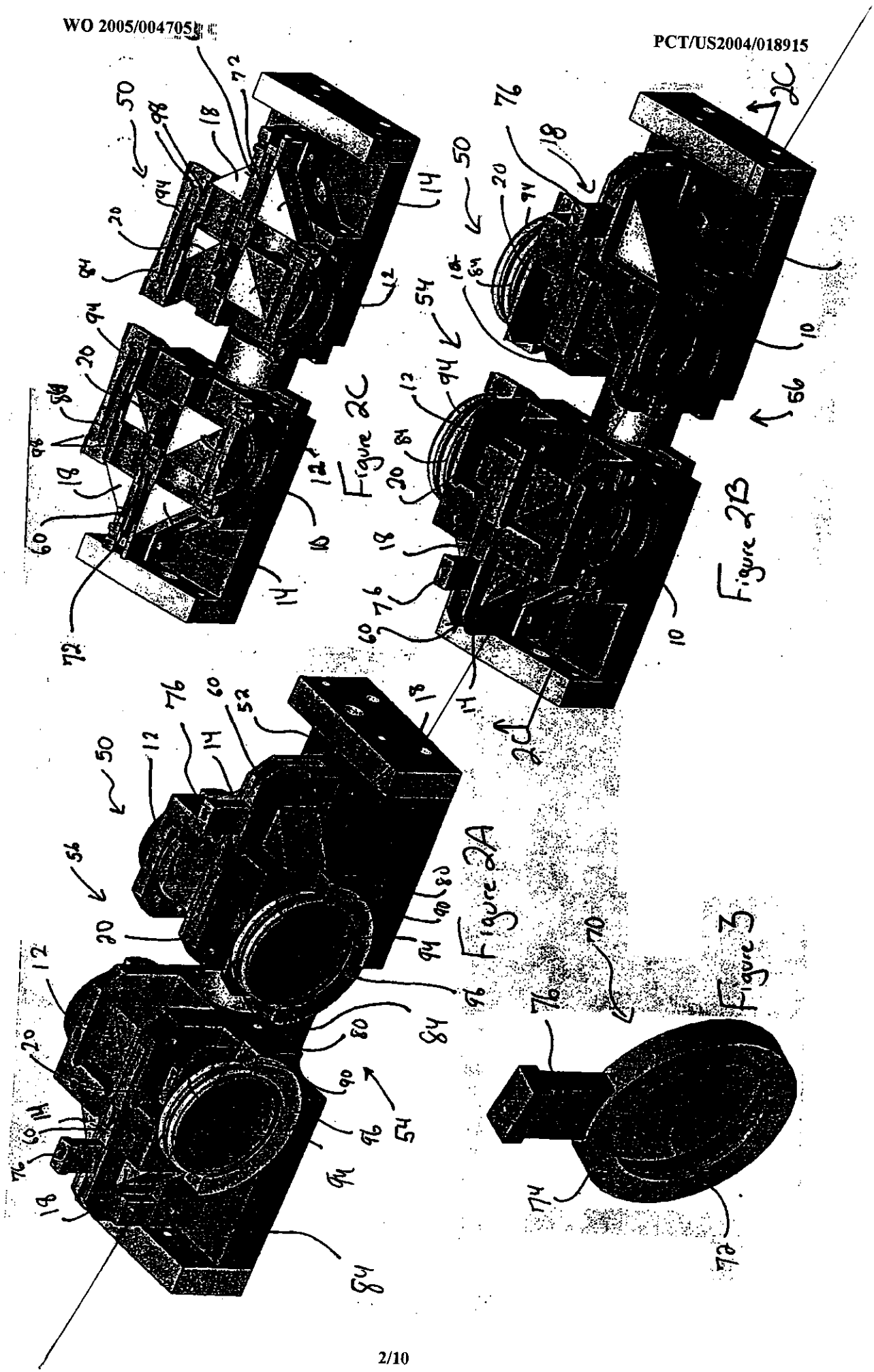
Figure 2A
Figure 2B
Figure 2C
Figure 3

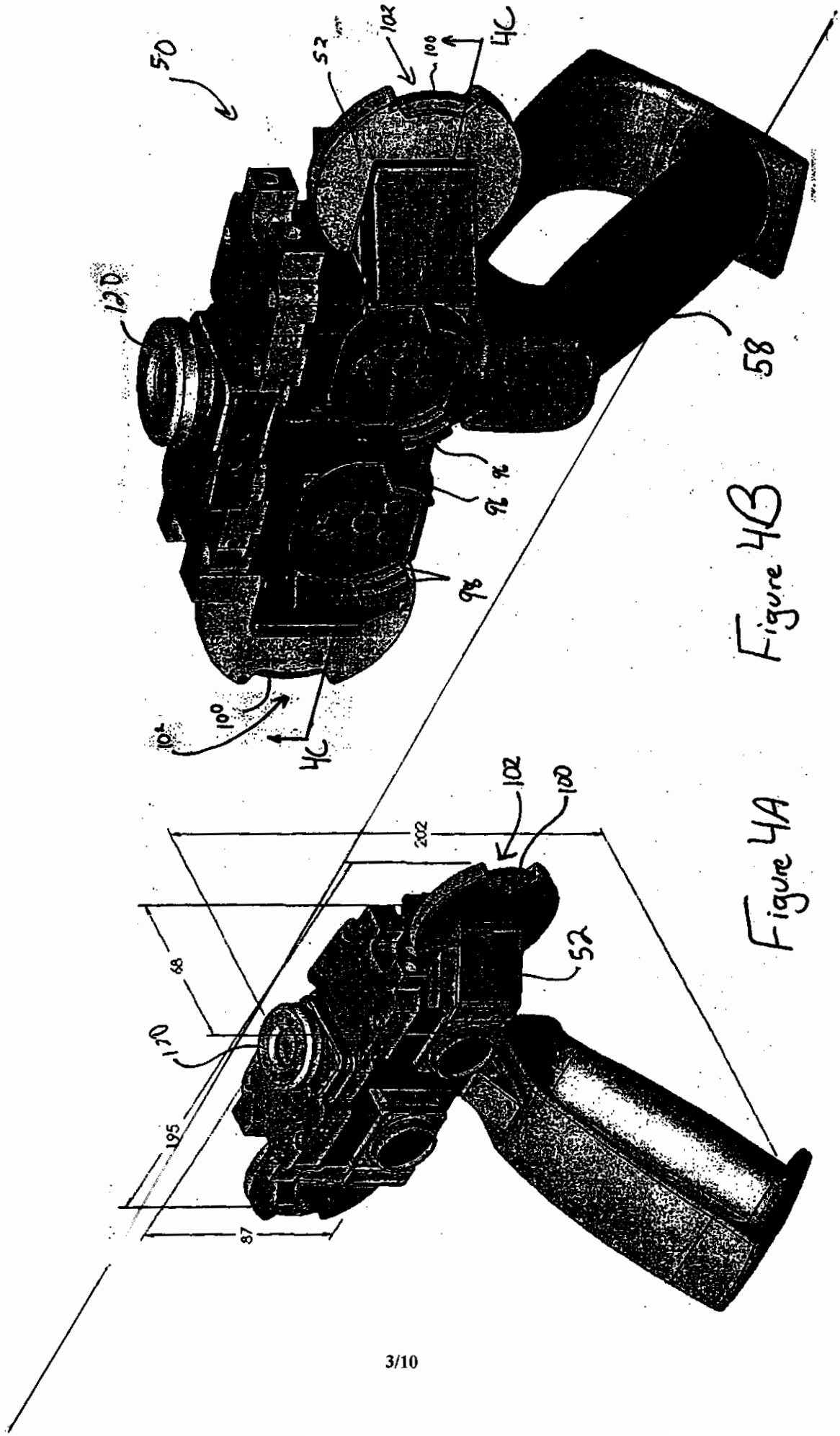

Figure 4B

Figure 4A

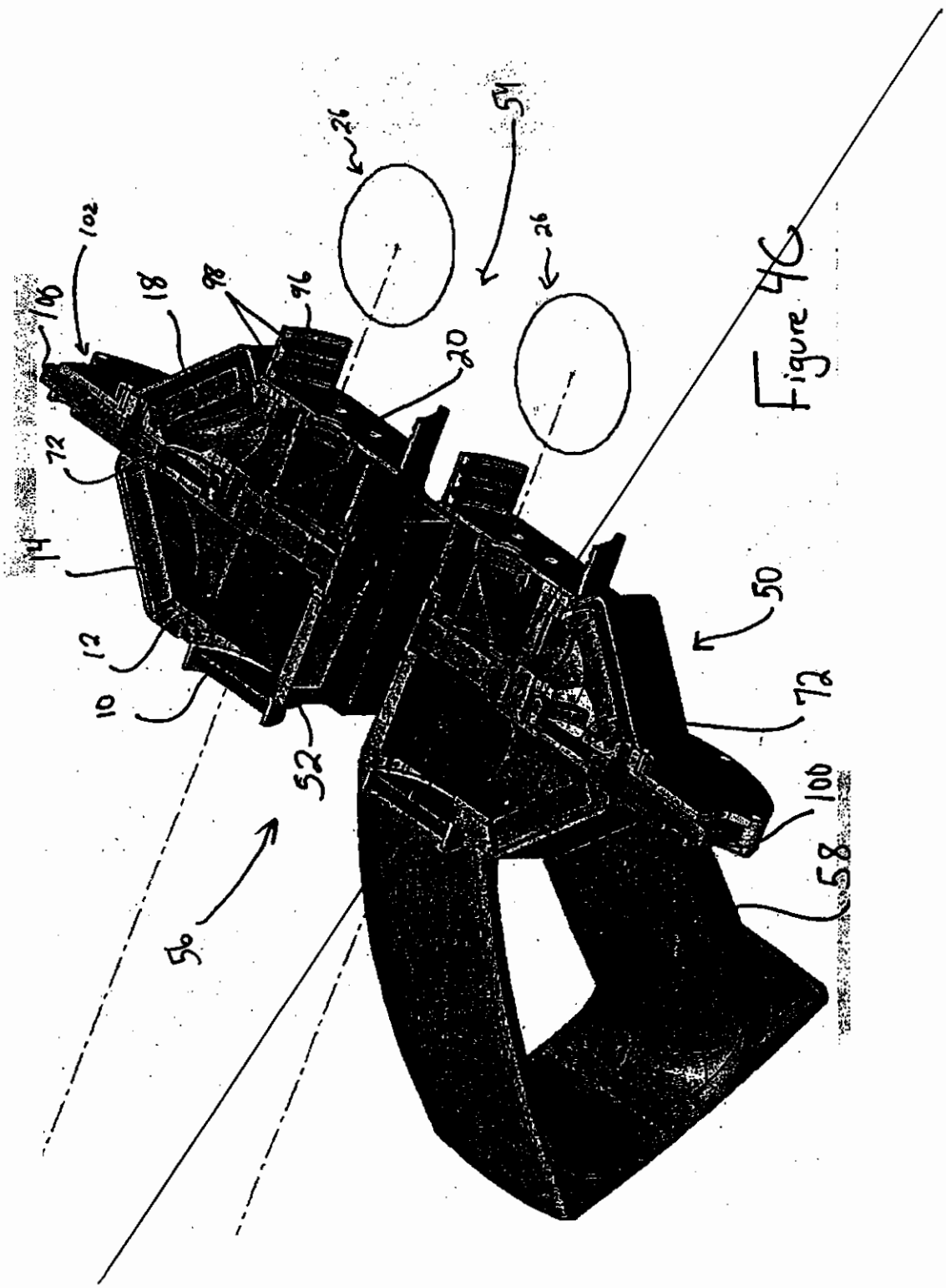

Figure 4C

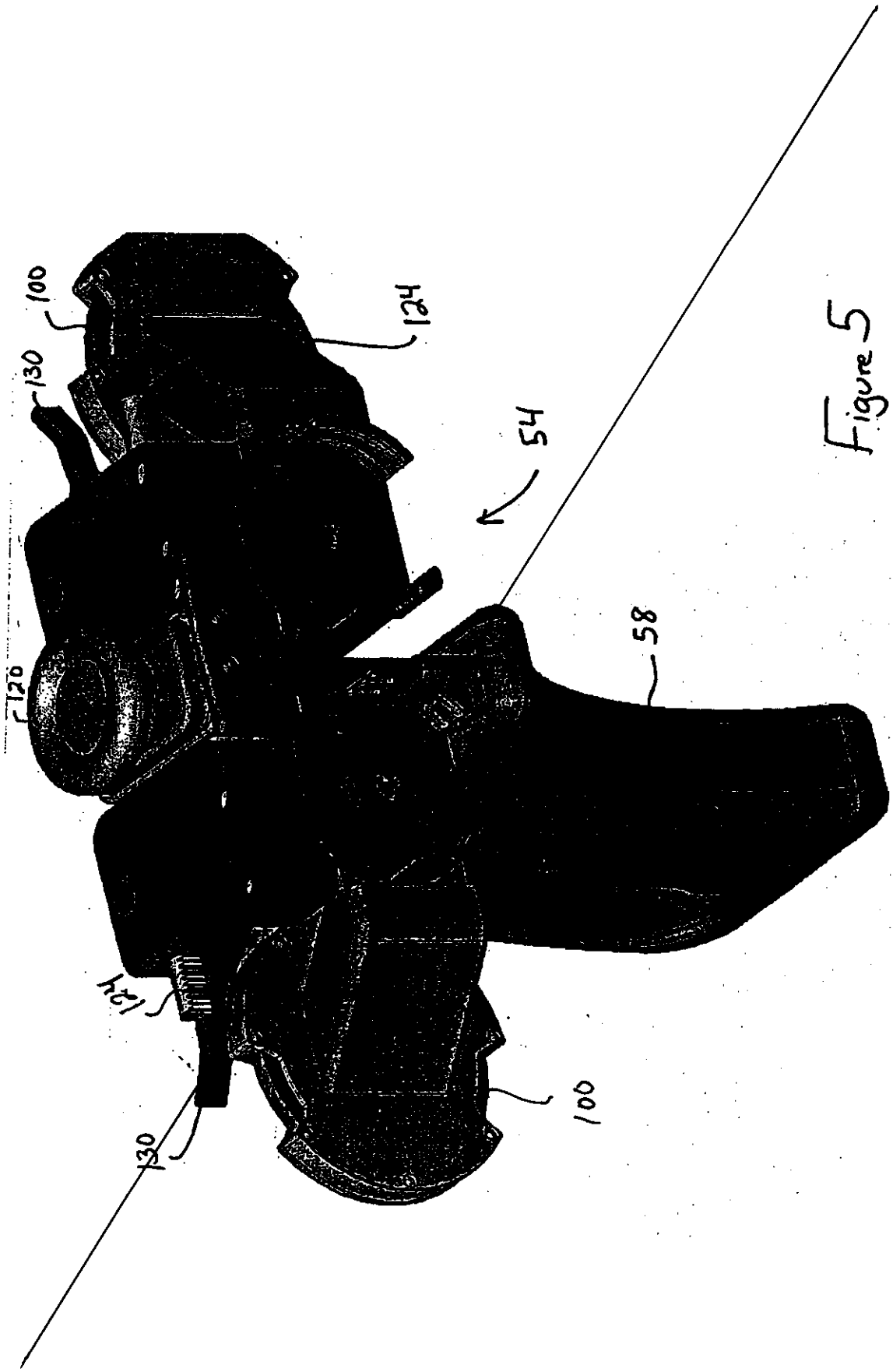

Figure 5

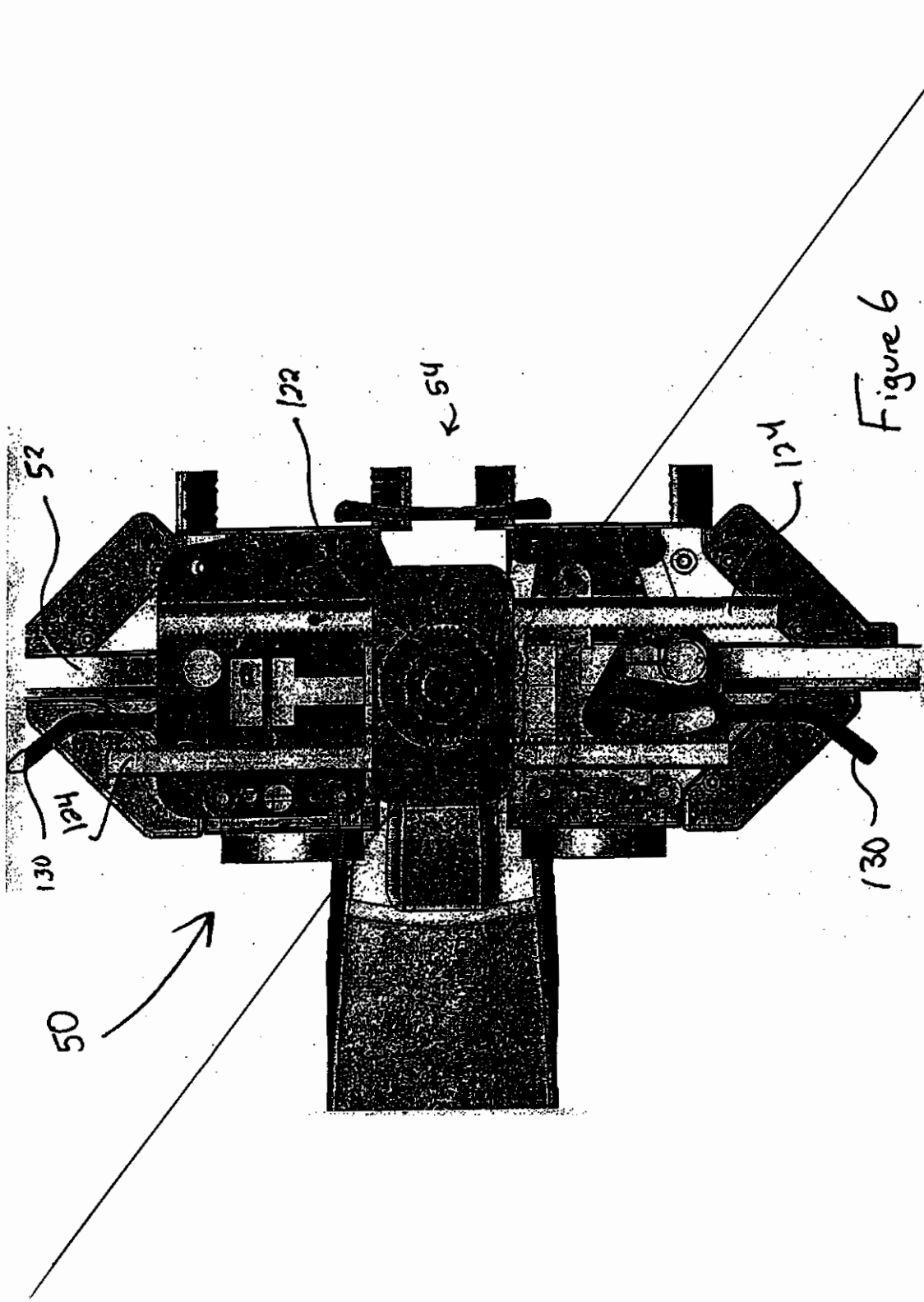

Figure 6

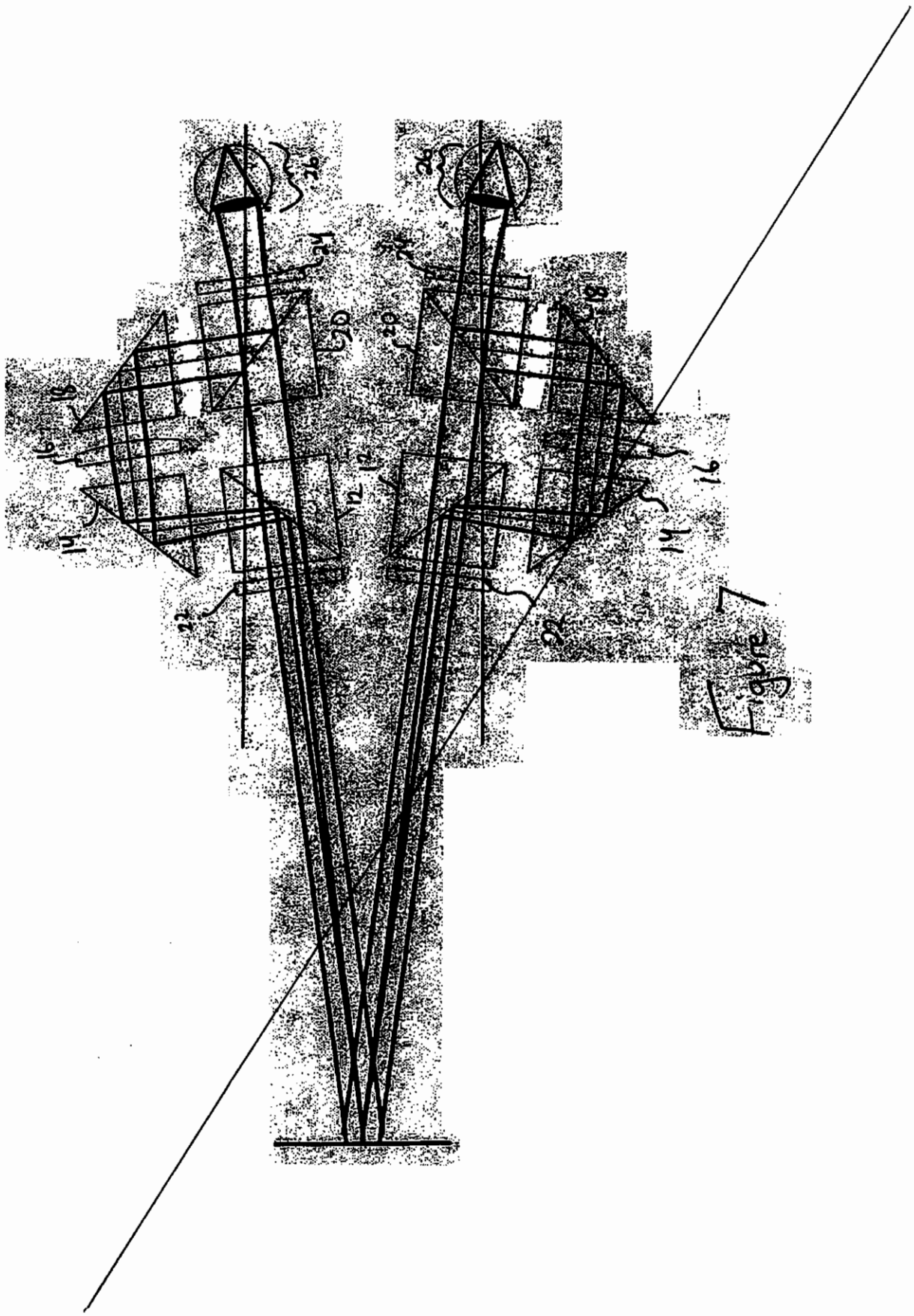

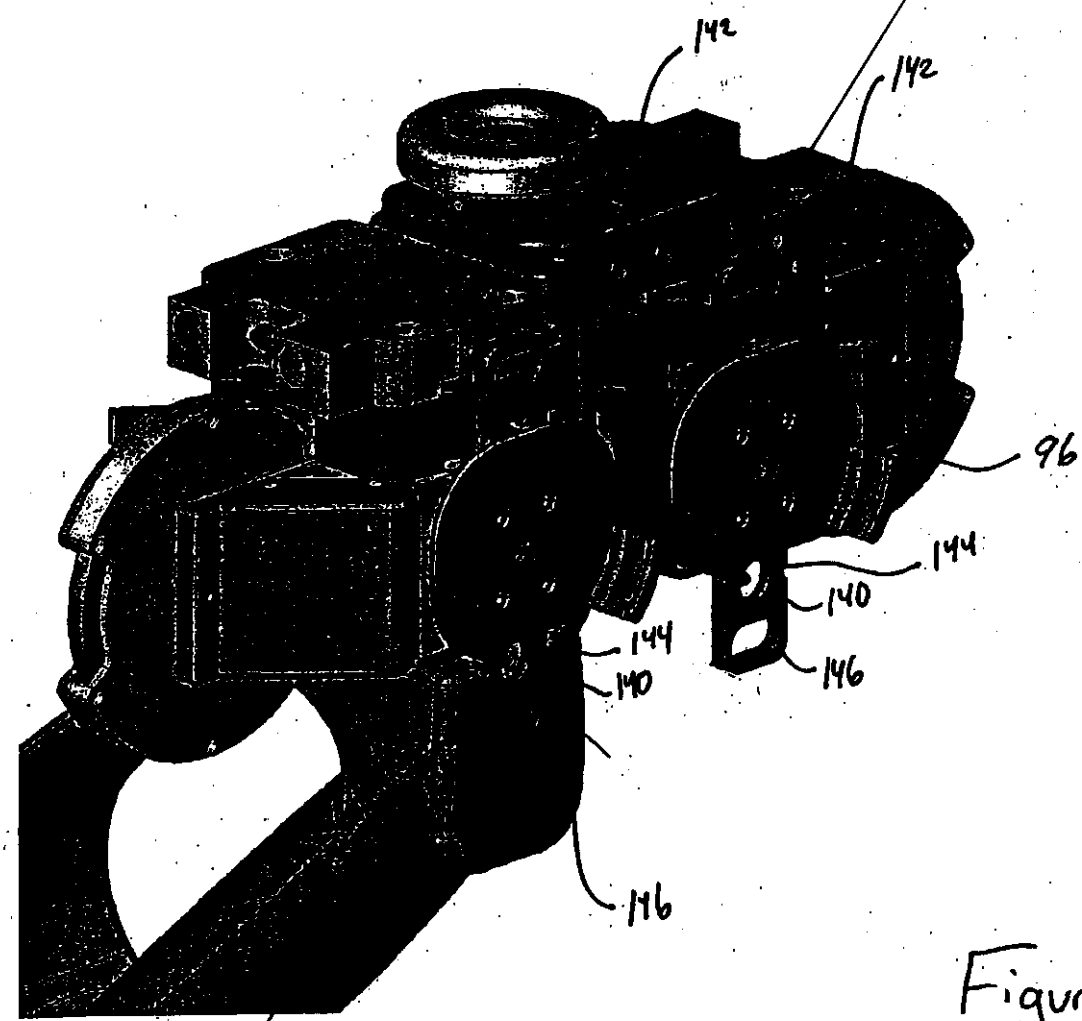

Figure 8

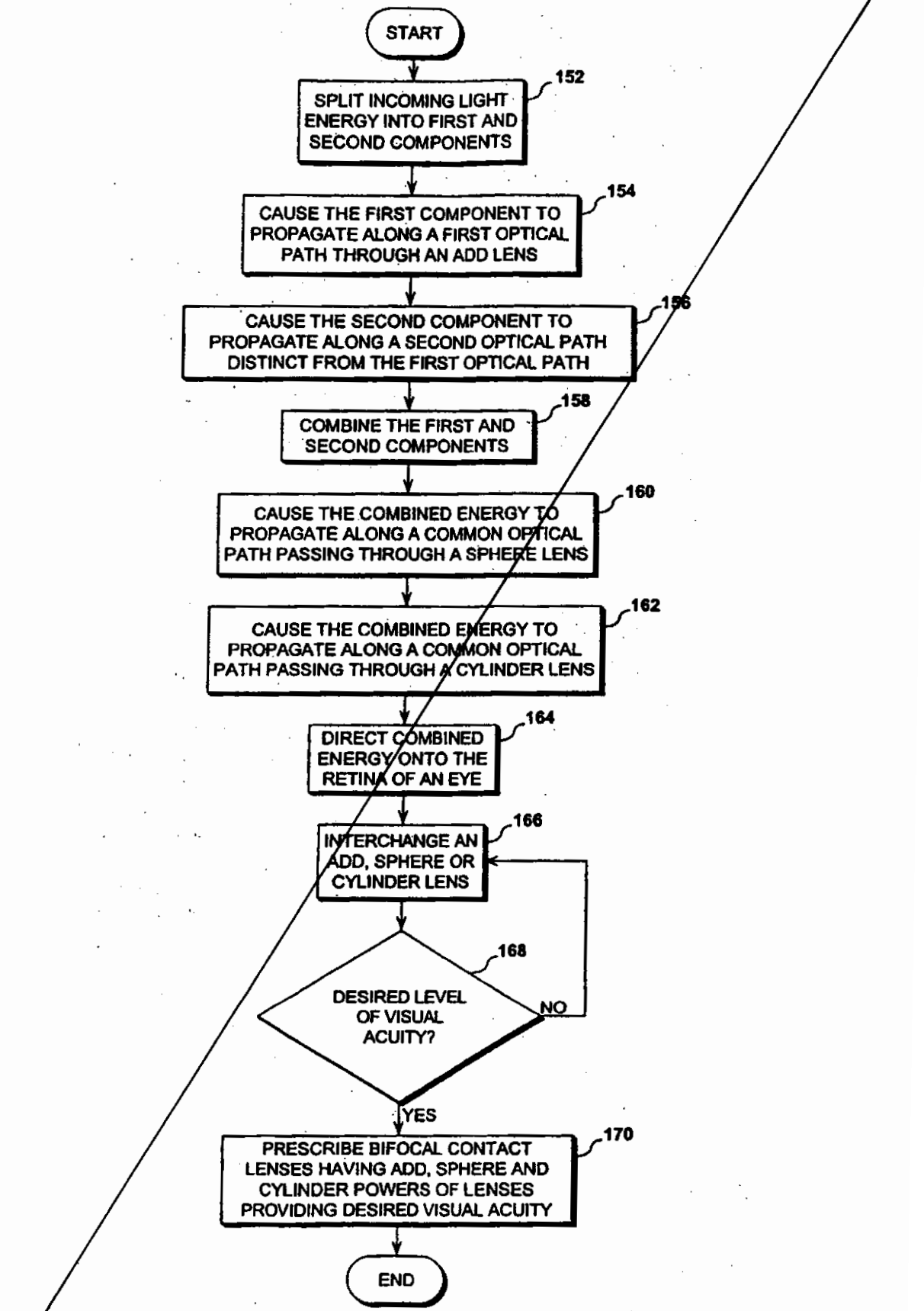
START
SPLIT INCOMING LIGHT ENERGY INTO FIRST AND SECOND COMPONENTS
152
CAUSE THE FIRST COMPONENT TO PROPAGATE ALONG A FIRST OPTICAL PATH THROUGH AN ADD LENS
154
CAUSE THE SECOND COMPONENT TO PROPAGATE ALONG A SECOND OPTICAL PATH DISTINCT FROM THE FIRST OPTICAL PATH
156
COMBINE THE FIRST AND SECOND COMPONENTS
158
CAUSE THE COMBINED ENERGY TO PROPAGATE ALONG A COMMON OPTICAL PATH PASSING THROUGH A SPHERE LENS
160
CAUSE THE COMBINED ENERGY TO PROPAGATE ALONG A COMMON OPTICAL PATH PASSING THROUGH A CYLINDER LENS
162
DIRECT COMBINED ENERGY ONTO THE RETINA OF AN EYE
164
INTERCHANGE AN ADD, SPHERE OR CYLINDER LENS
166
DESIRED LEVEL OF VISUAL ACUITY?
168
NO
YES
PRESCRIBE BIFOCAL CONTACT LENSES HAVING ADD, SPHERE AND CYLINDER POWERS OF LENSES PROVIDING DESIRED VISUAL ACUITY
170
END

Figure 9

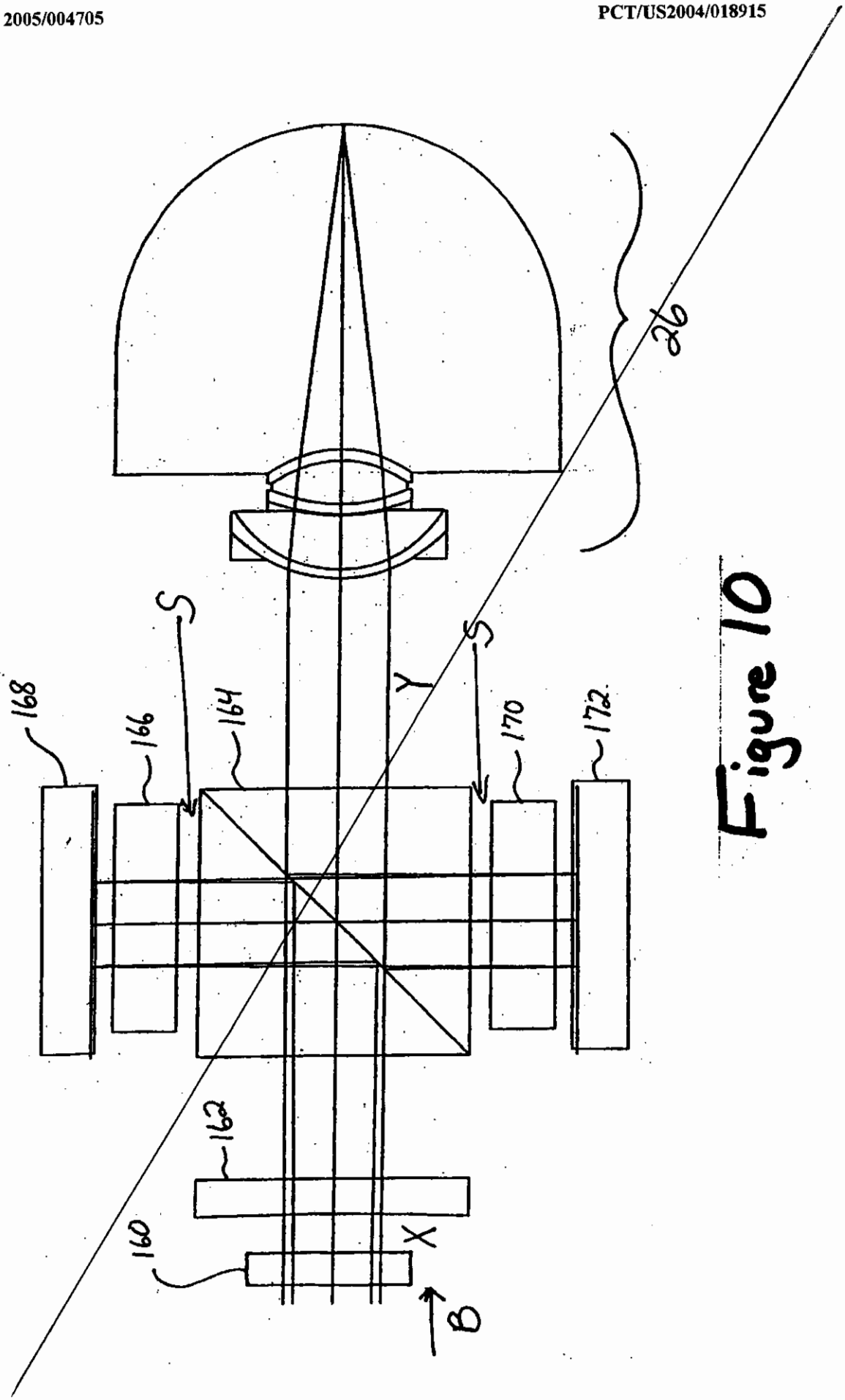

Figure 10

FIG. 1

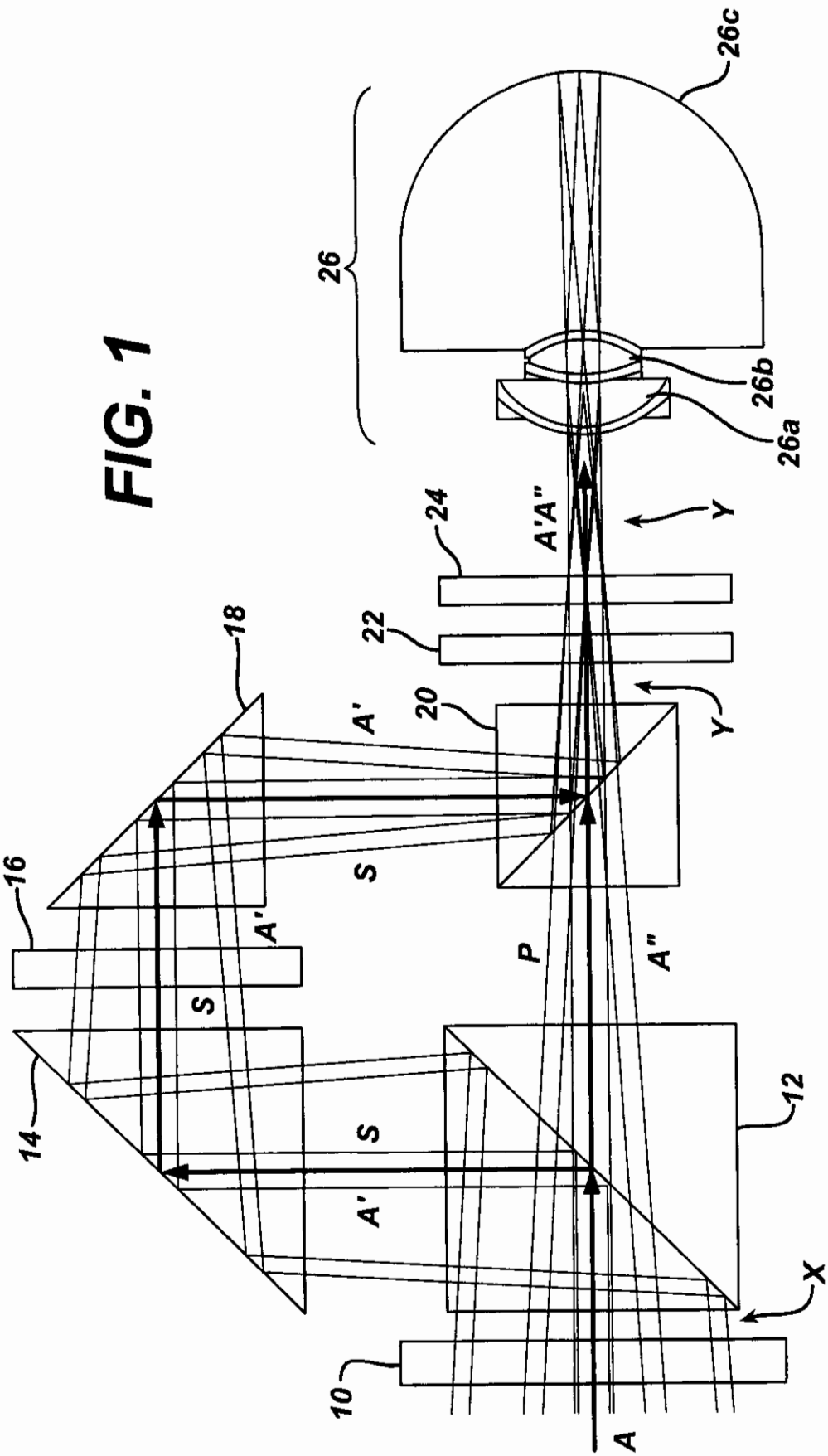

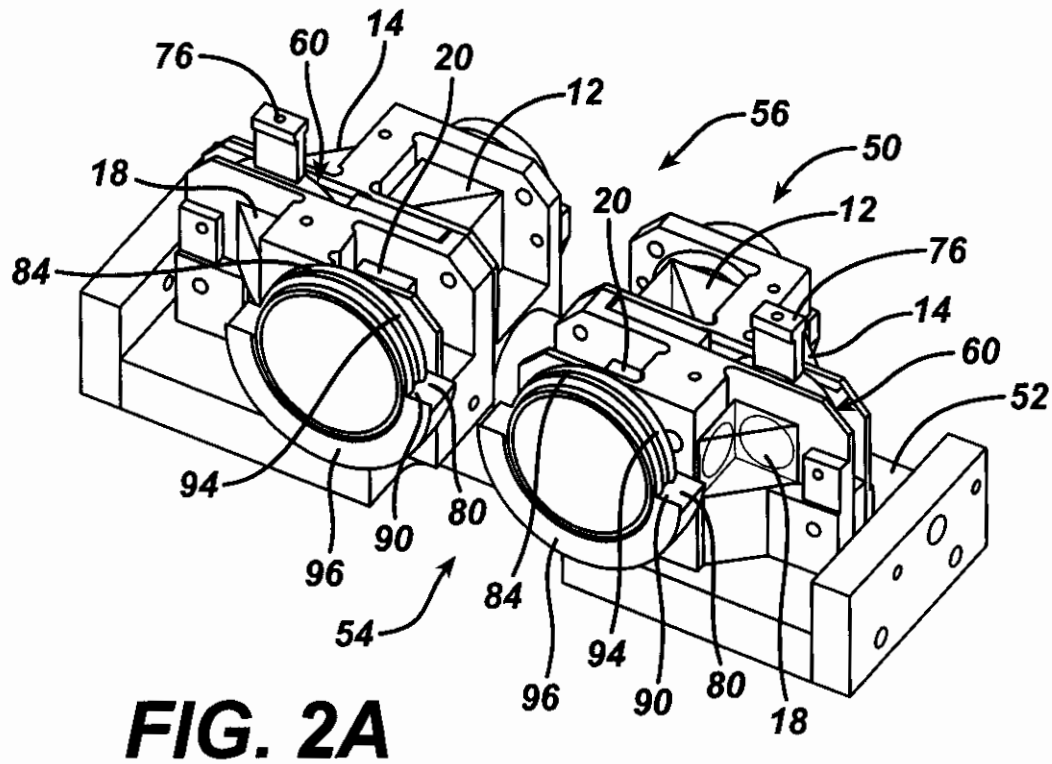
76
60
14
20
12
56
50
18
20
12
84
76
14
60
52
94
90
80
96
54
84
94
96
90
80
18

FIG. 2A

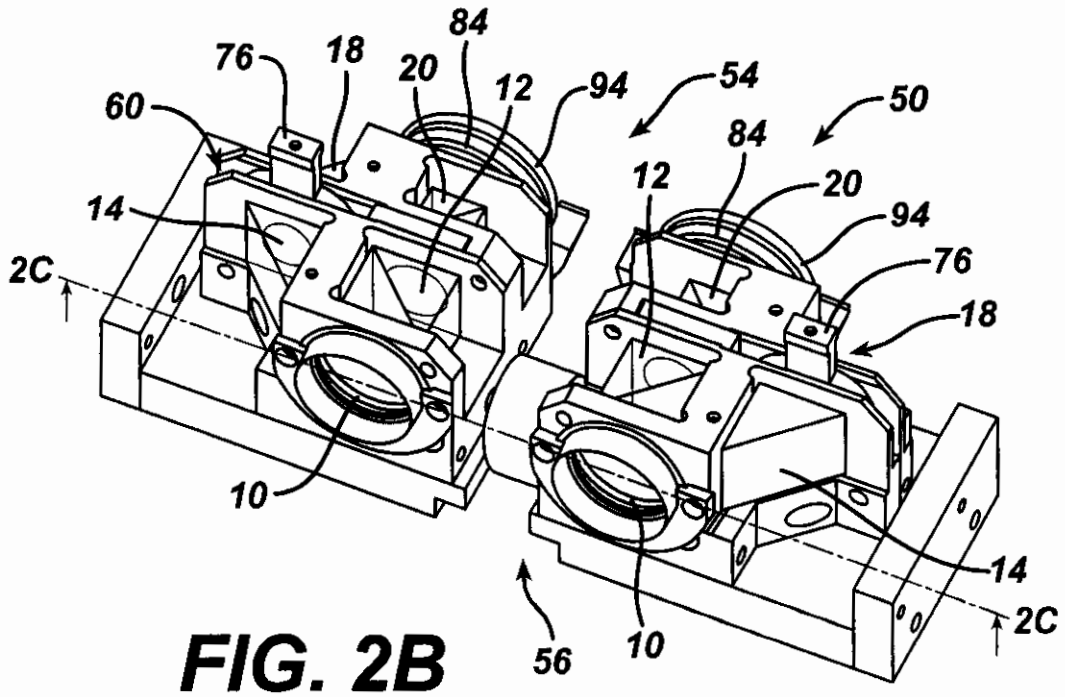
84
76
18
20
12
94
54
50
60
84
12
20
14
94
76
18
2C
10
14
56
10
2C

FIG. 2B

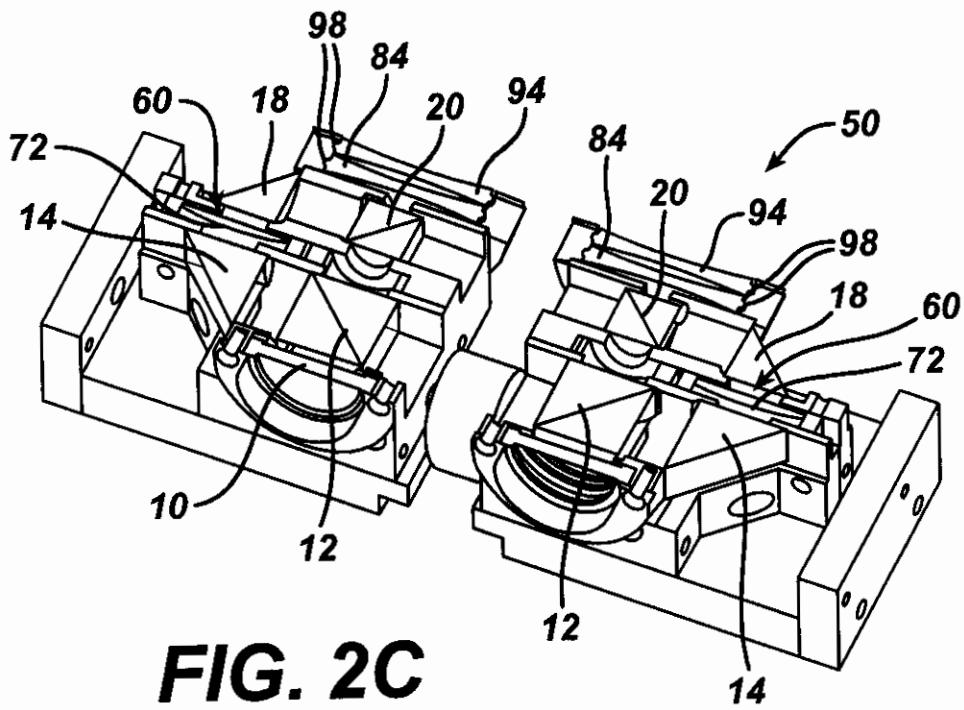

FIG. 2C

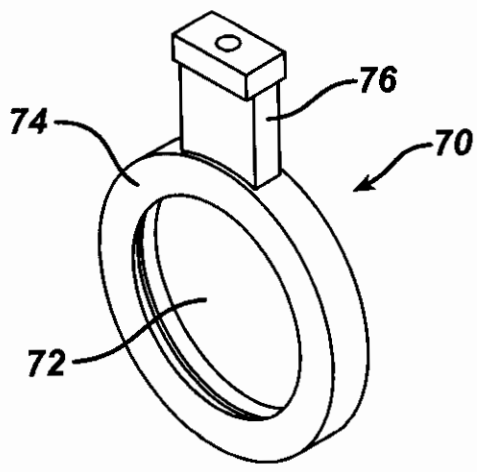

FIG. 3

FIG. 4A

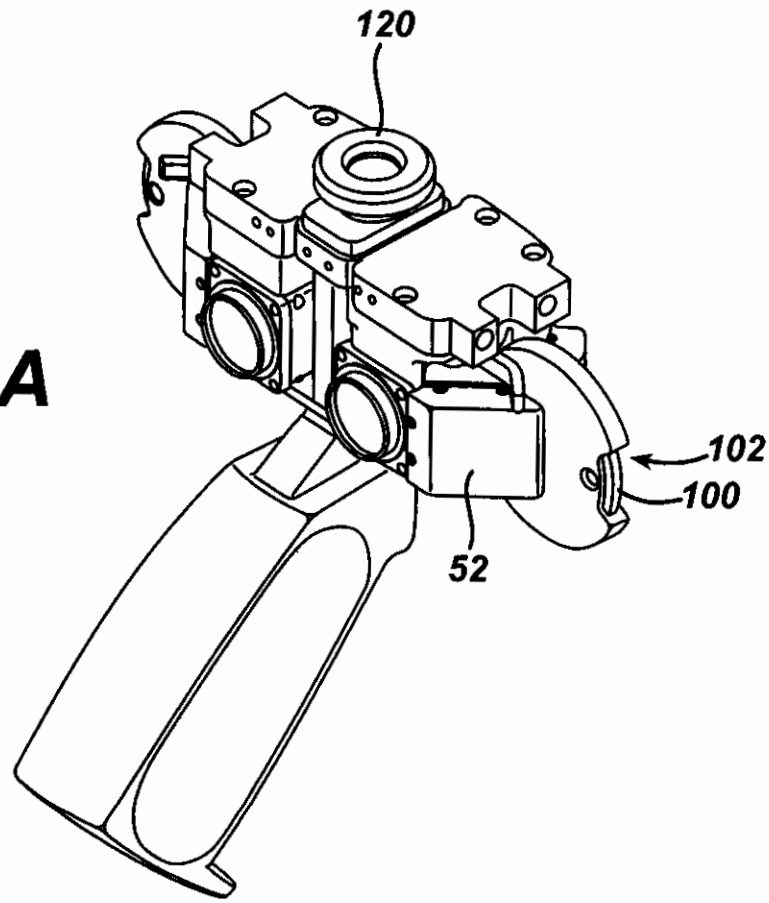

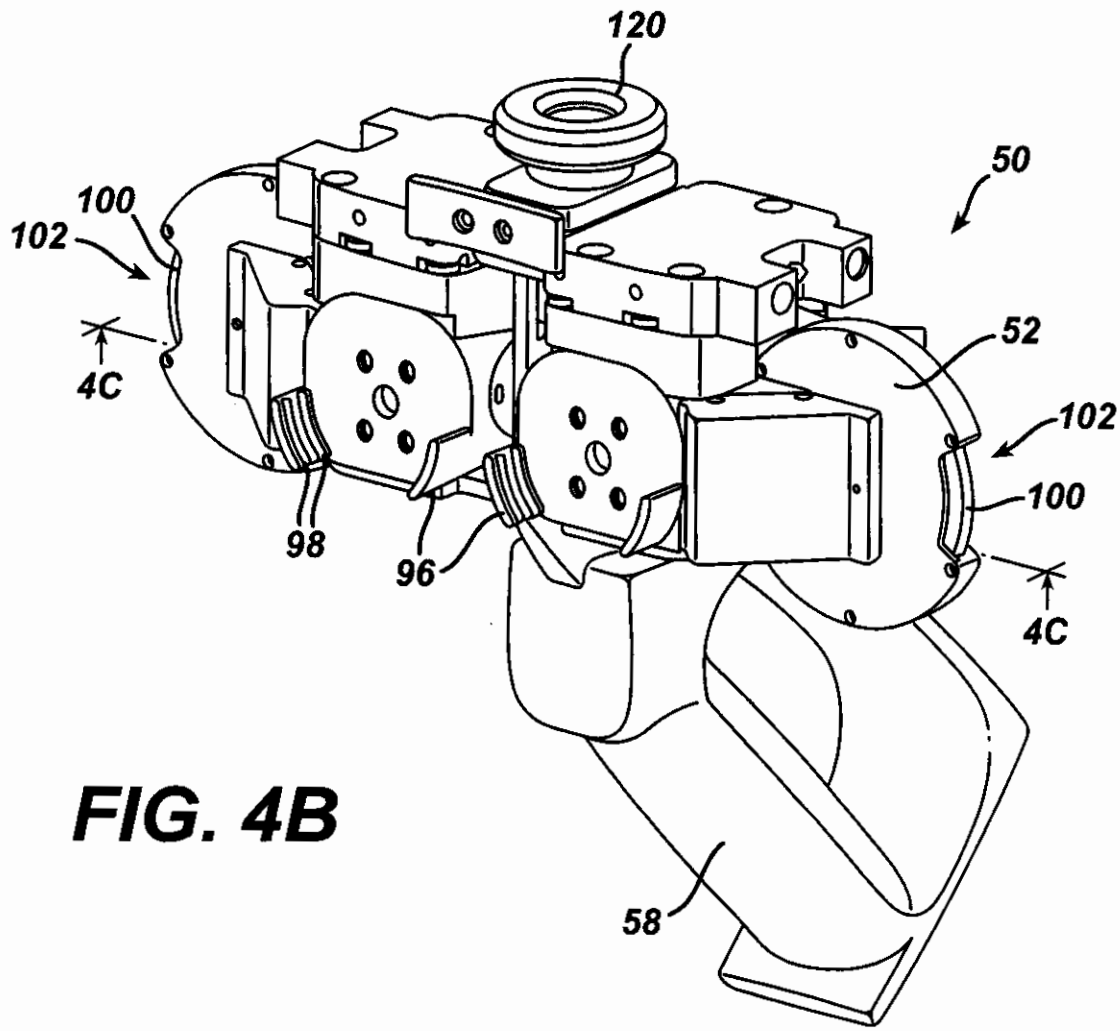

FIG. 4B

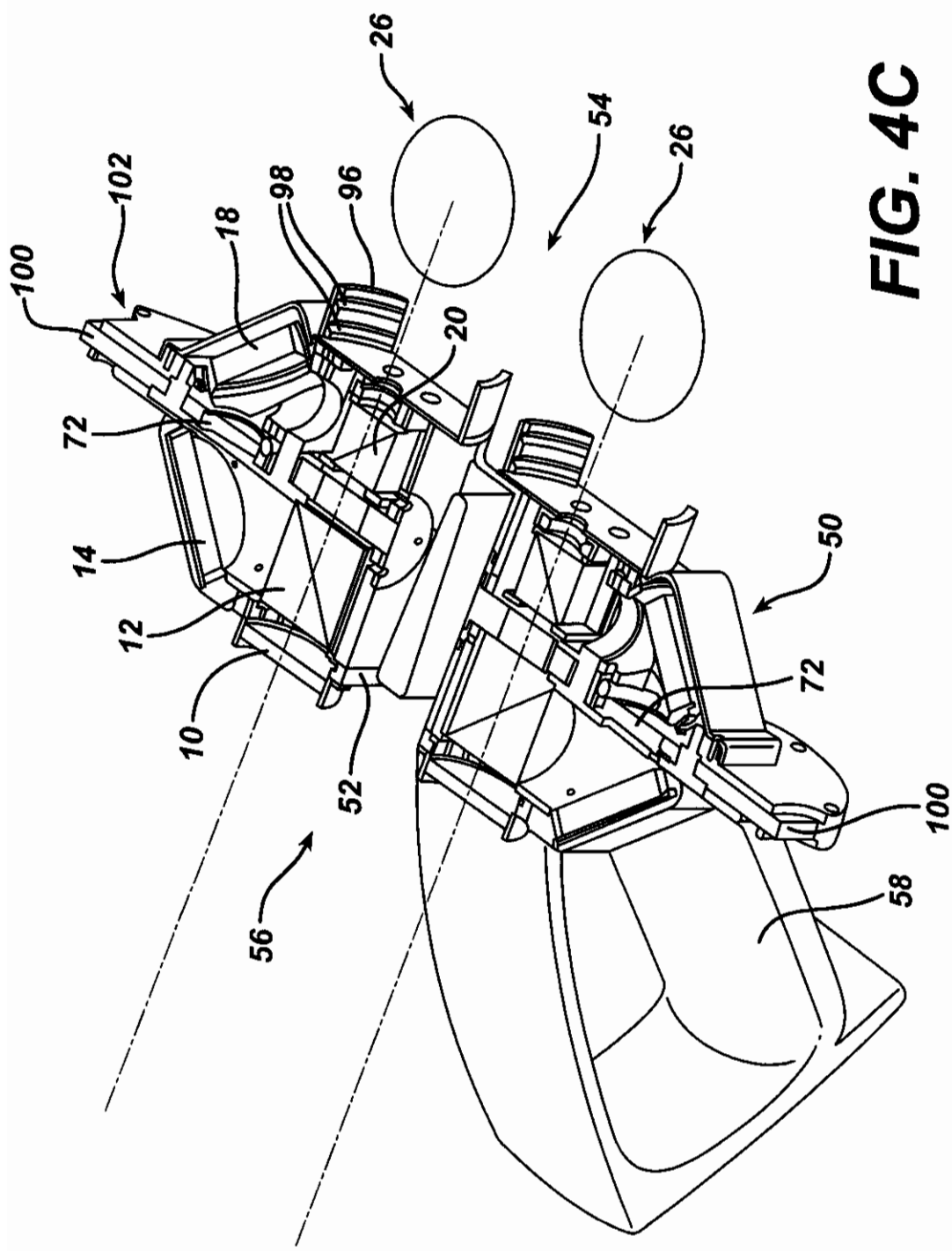

FIG. 4C

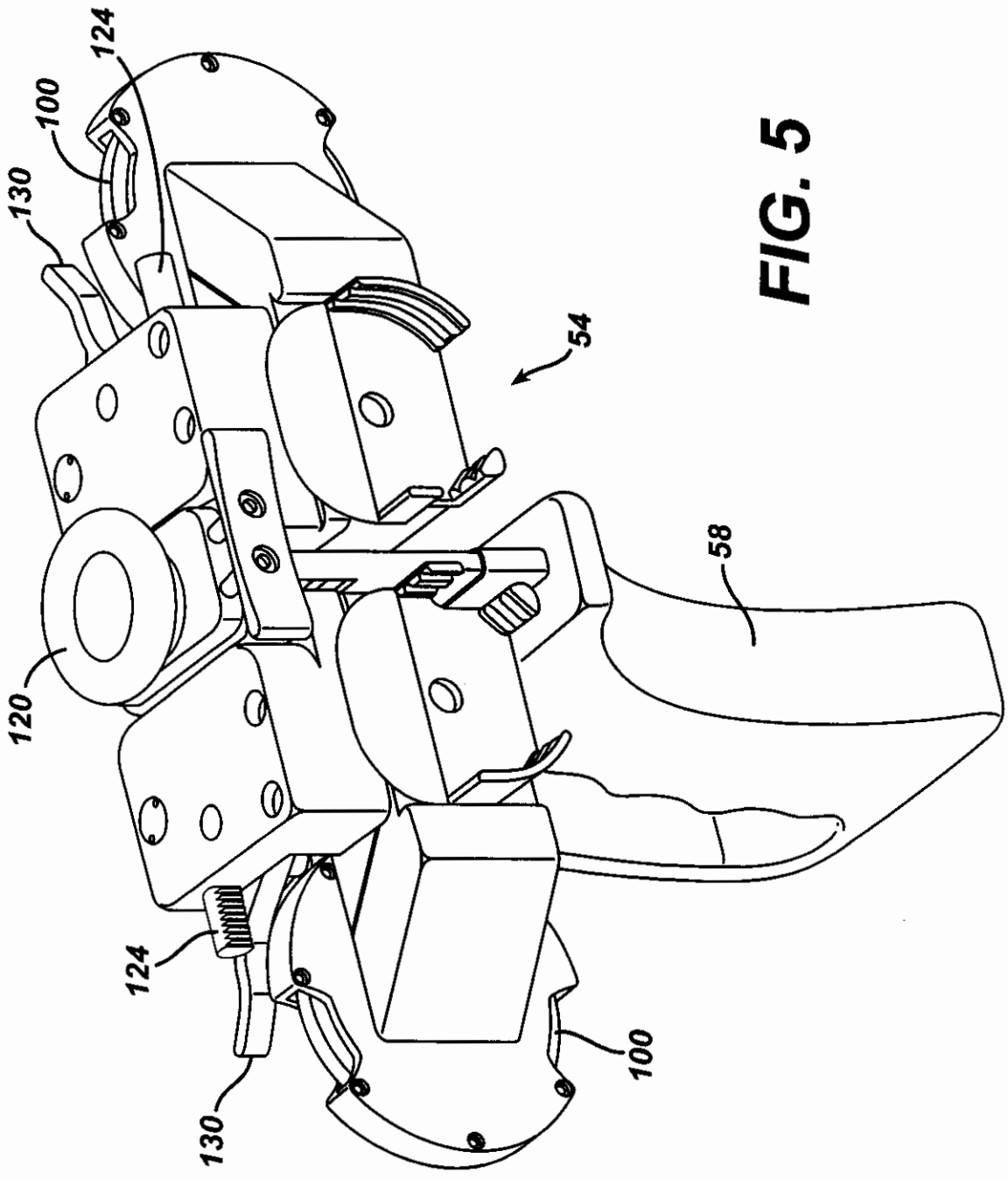

FIG. 5

FIG. 6

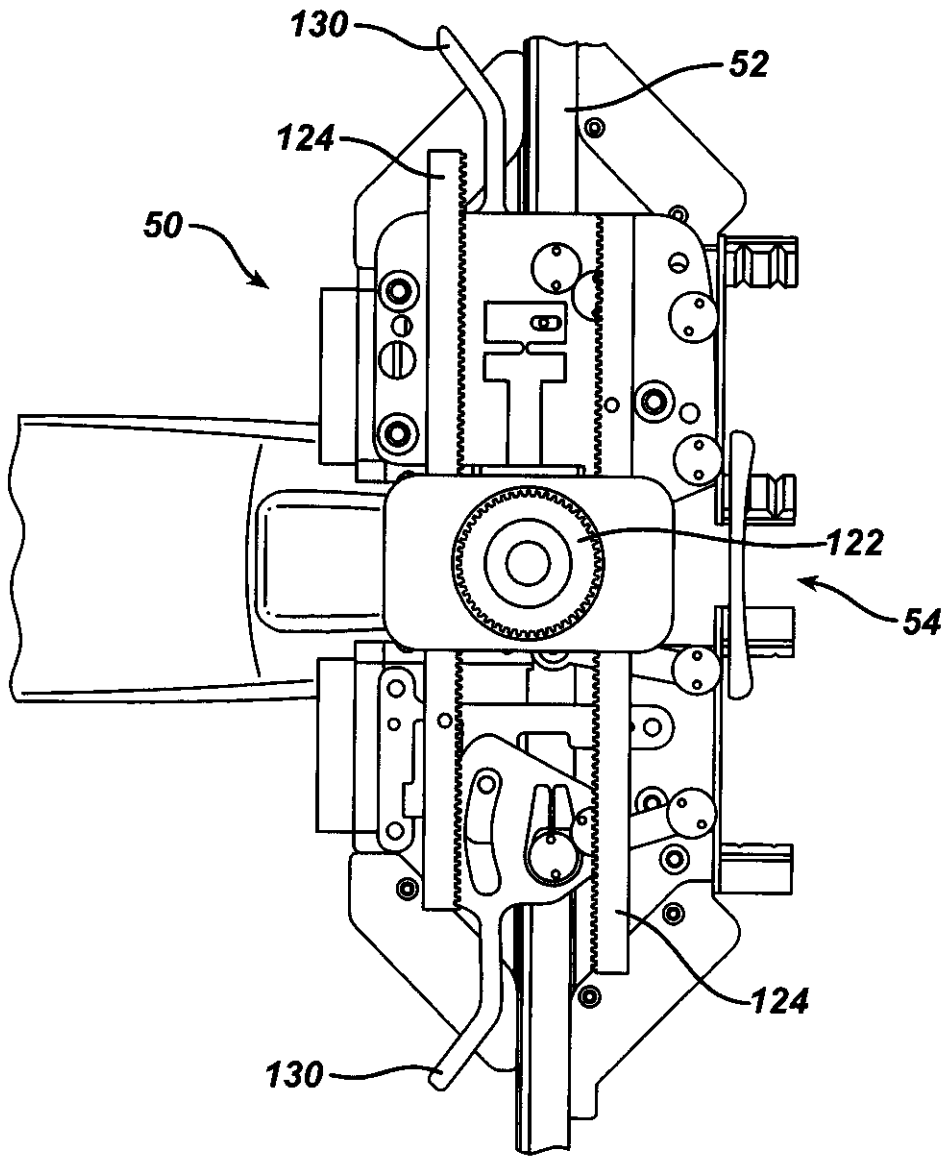

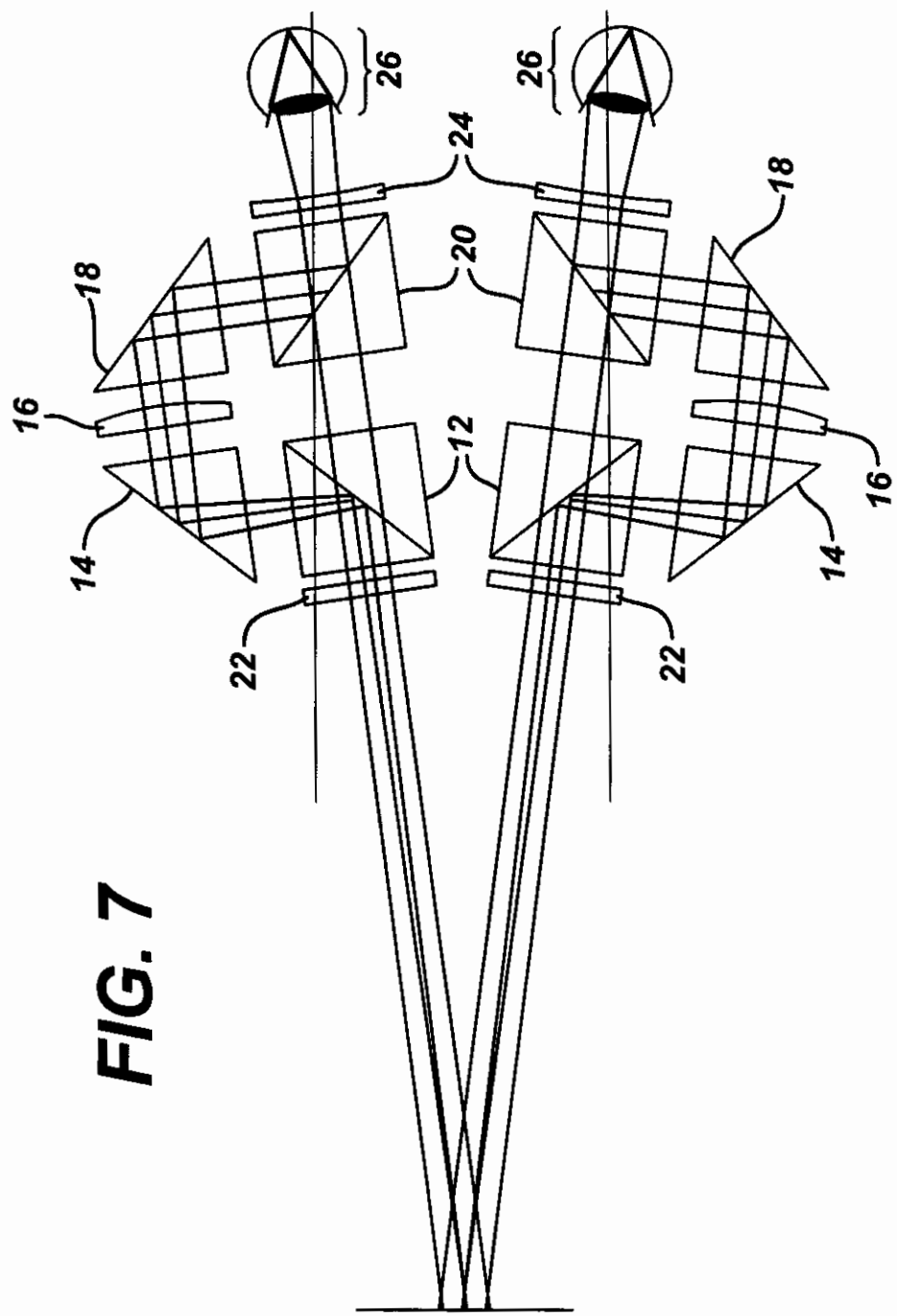

FIG. 7

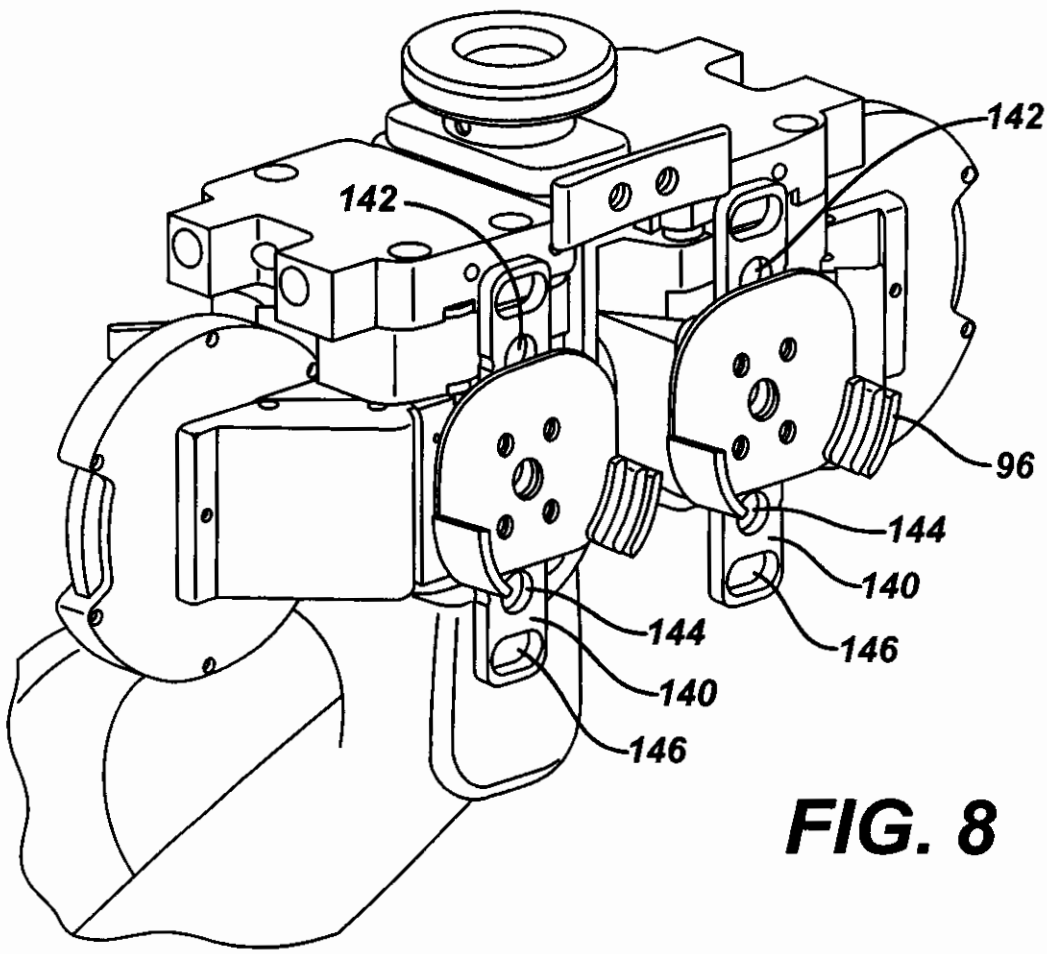

FIG. 8

FIG. 9

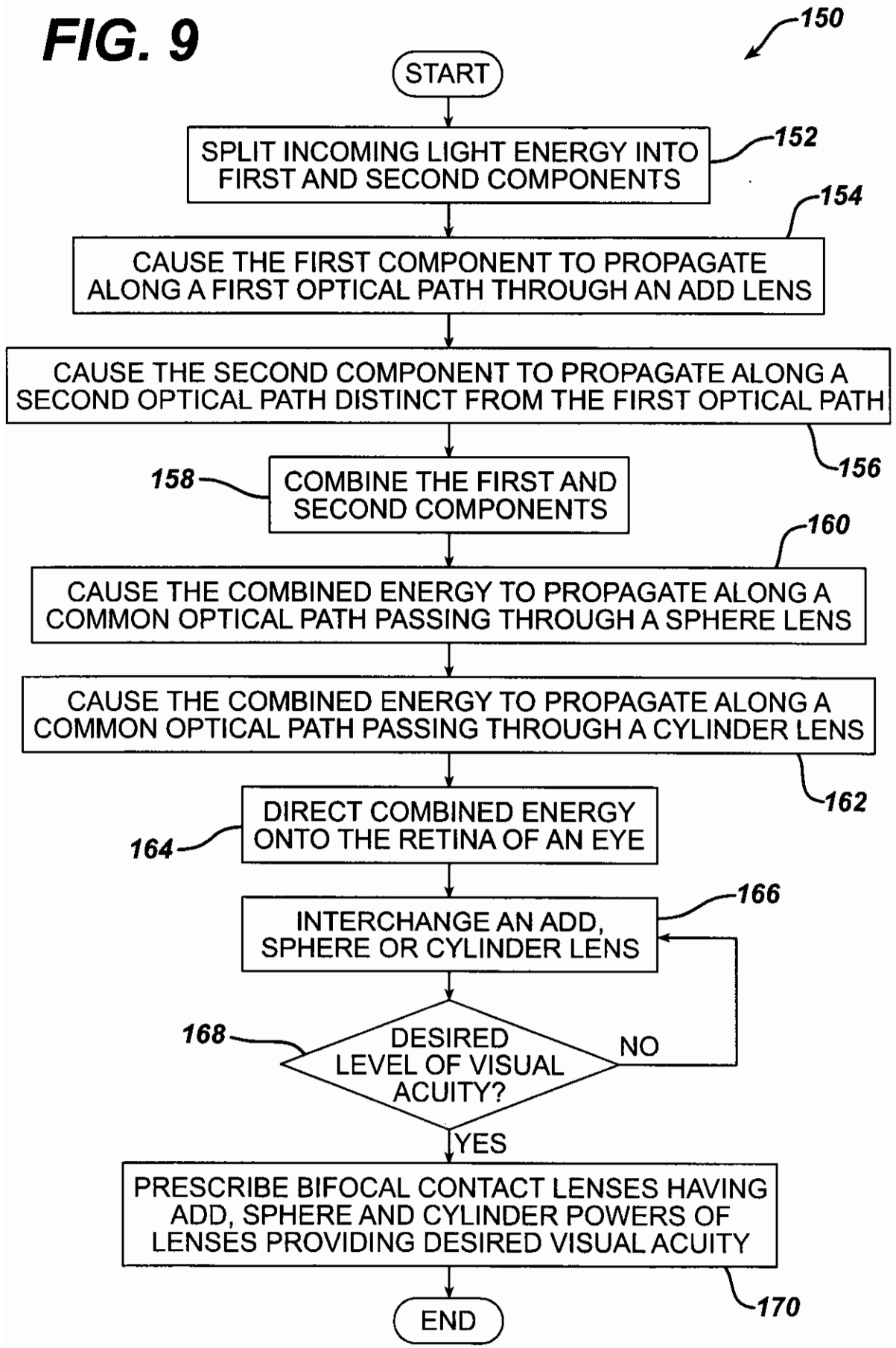
150
START
SPLIT INCOMING LIGHT ENERGY INTO FIRST AND SECOND COMPONENTS
152
154
CAUSE THE FIRST COMPONENT TO PROPAGATE ALONG A FIRST OPTICAL PATH THROUGH AN ADD LENS
CAUSE THE SECOND COMPONENT TO PROPAGATE ALONG A SECOND OPTICAL PATH DISTINCT FROM THE FIRST OPTICAL PATH
156
158
COMBINE THE FIRST AND SECOND COMPONENTS
160
CAUSE THE COMBINED ENERGY TO PROPAGATE ALONG A COMMON OPTICAL PATH PASSING THROUGH A SPHERE LENS
CAUSE THE COMBINED ENERGY TO PROPAGATE ALONG A COMMON OPTICAL PATH PASSING THROUGH A CYLINDER LENS
162
164
DIRECT COMBINED ENERGY ONTO THE RETINA OF AN EYE
166
INTERCHANGE AN ADD, SPHERE OR CYLINDER LENS
168
DESIRED LEVEL OF VISUAL ACUITY?
NO
YES
PRESCRIBE BIFOCAL CONTACT LENSES HAVING ADD, SPHERE AND CYLINDER POWERS OF LENSES PROVIDING DESIRED VISUAL ACUITY
170
END

FIG. 10

