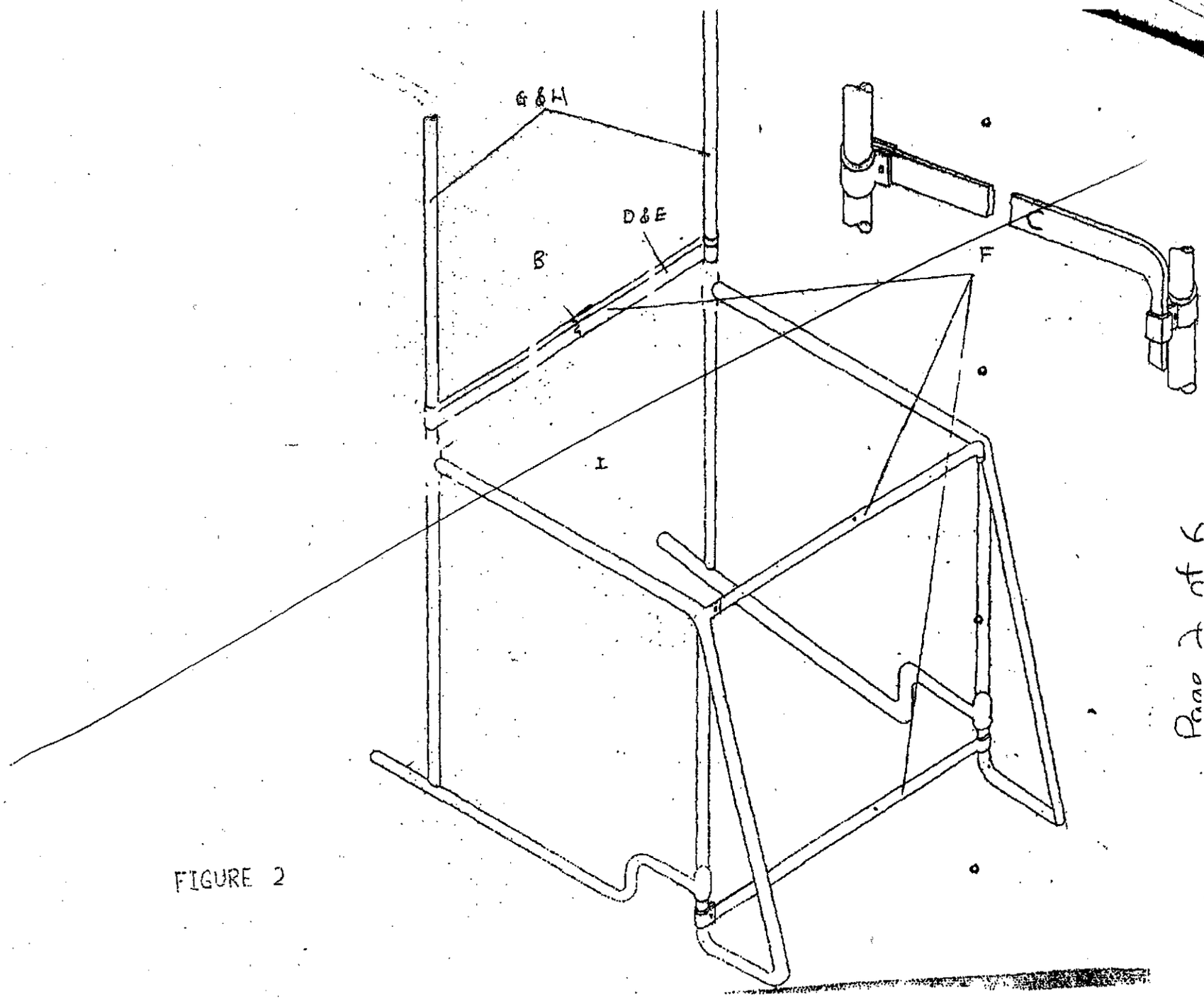

FIGURE 2

FIGURE 2

