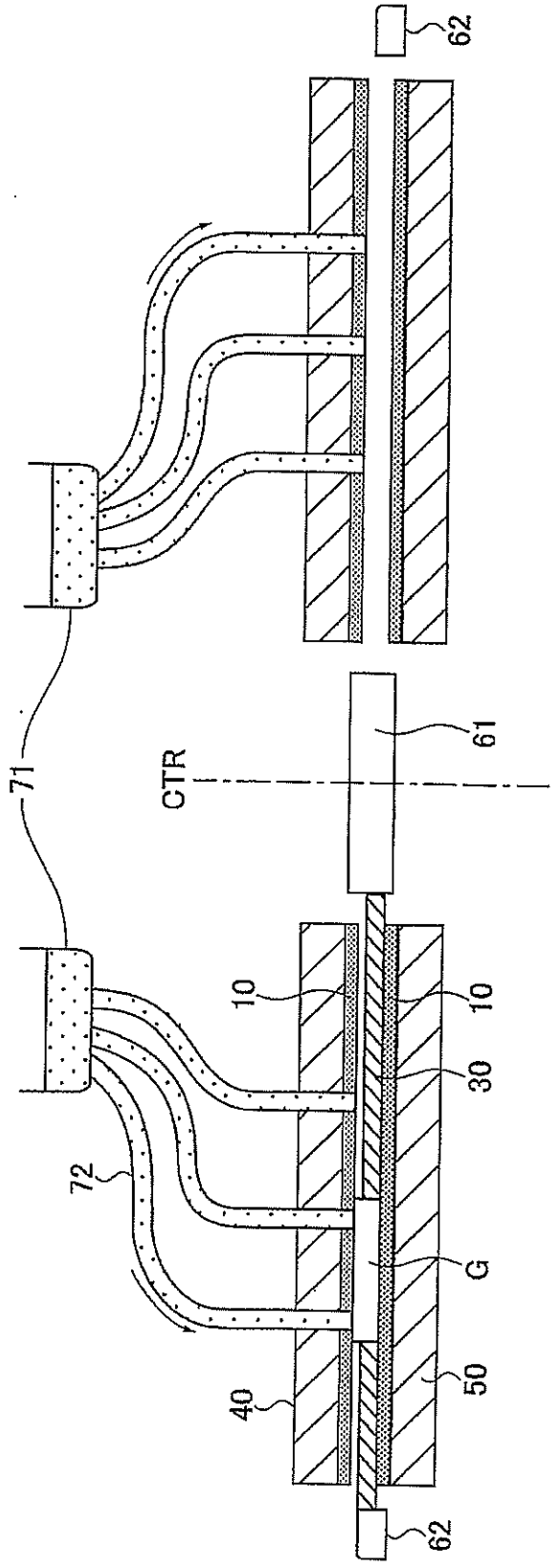

FIG. 1

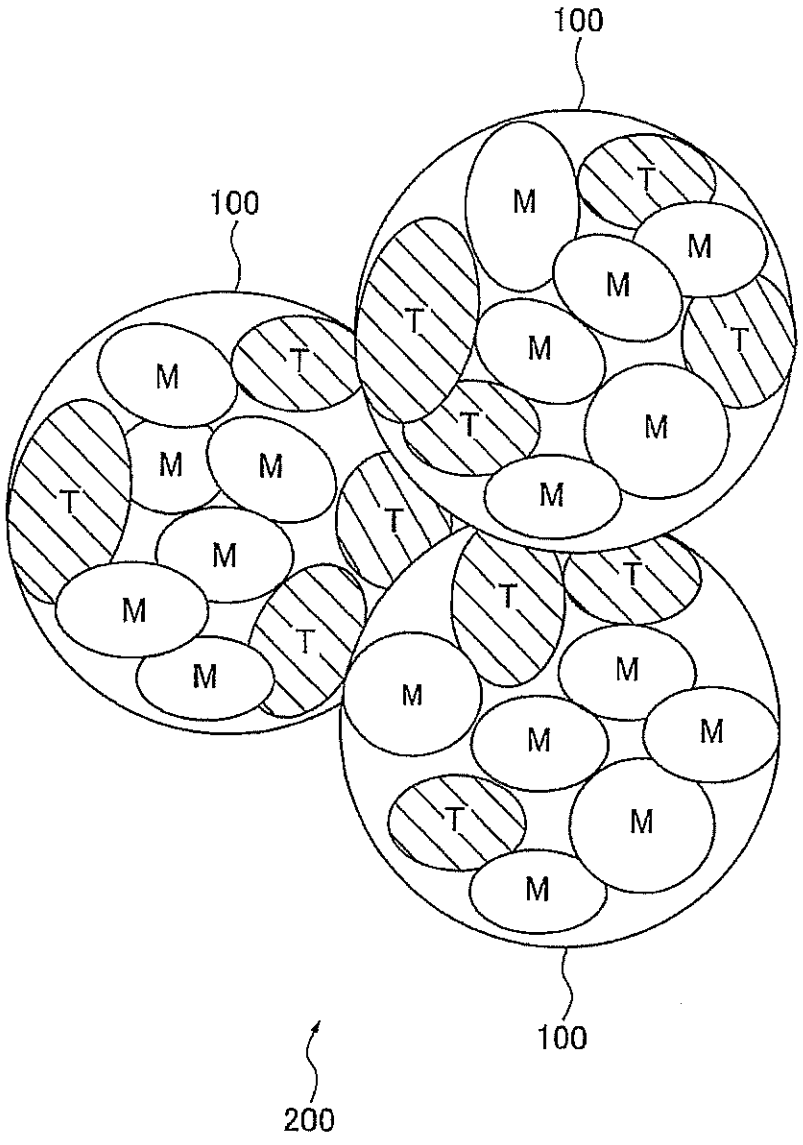

FIG.2

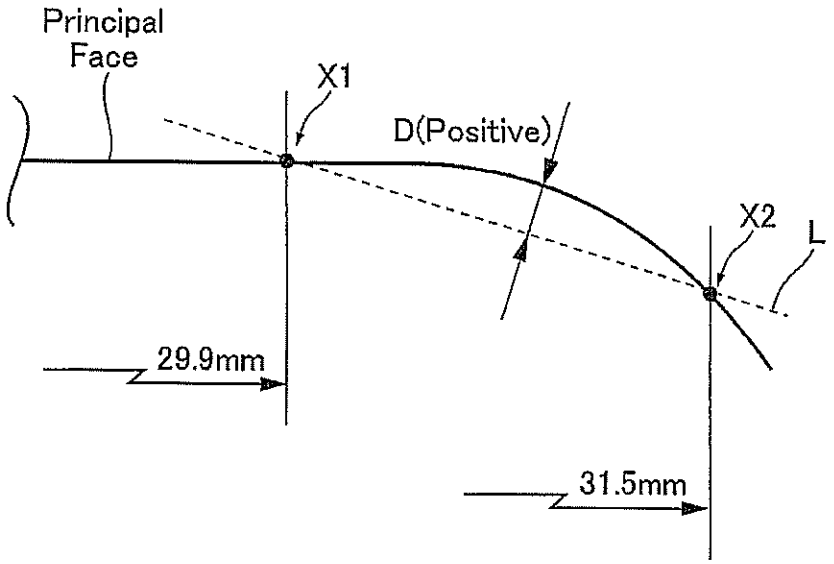

ROLL-OFF SHAPE

FIG.3A

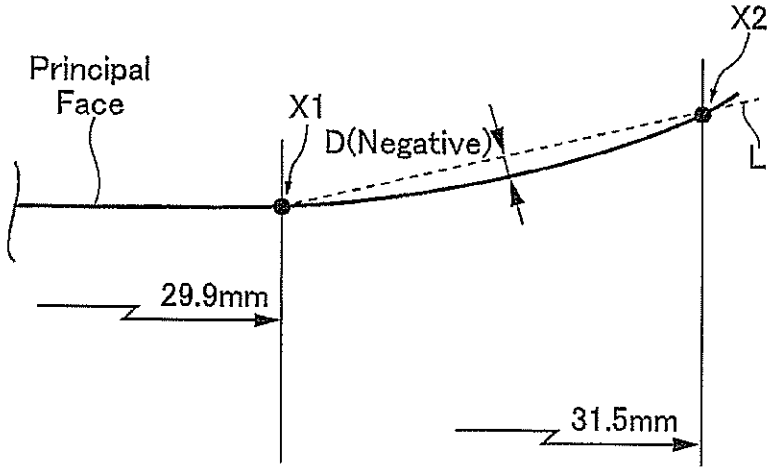

SKI JUMP SHAPE

FIG.3B

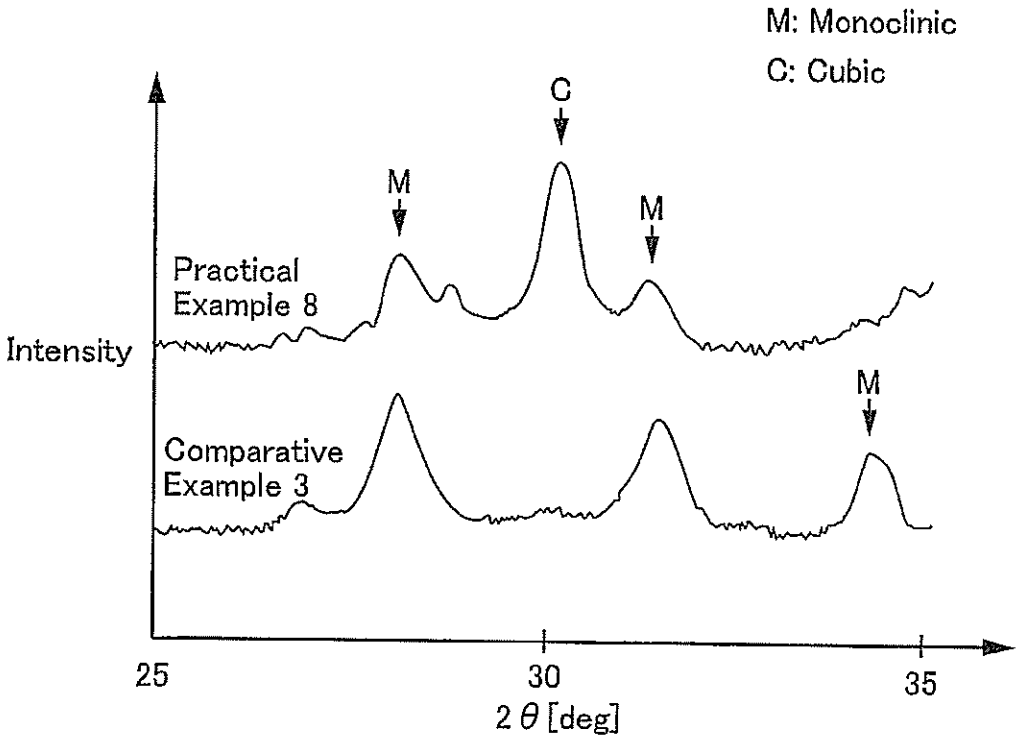
M: Monoclinic
C: Cubic
C
M
M
Practical
Example 8
Intensity
M
Comparative
Example 3
25
30
35
2 θ [deg]

FIG.4