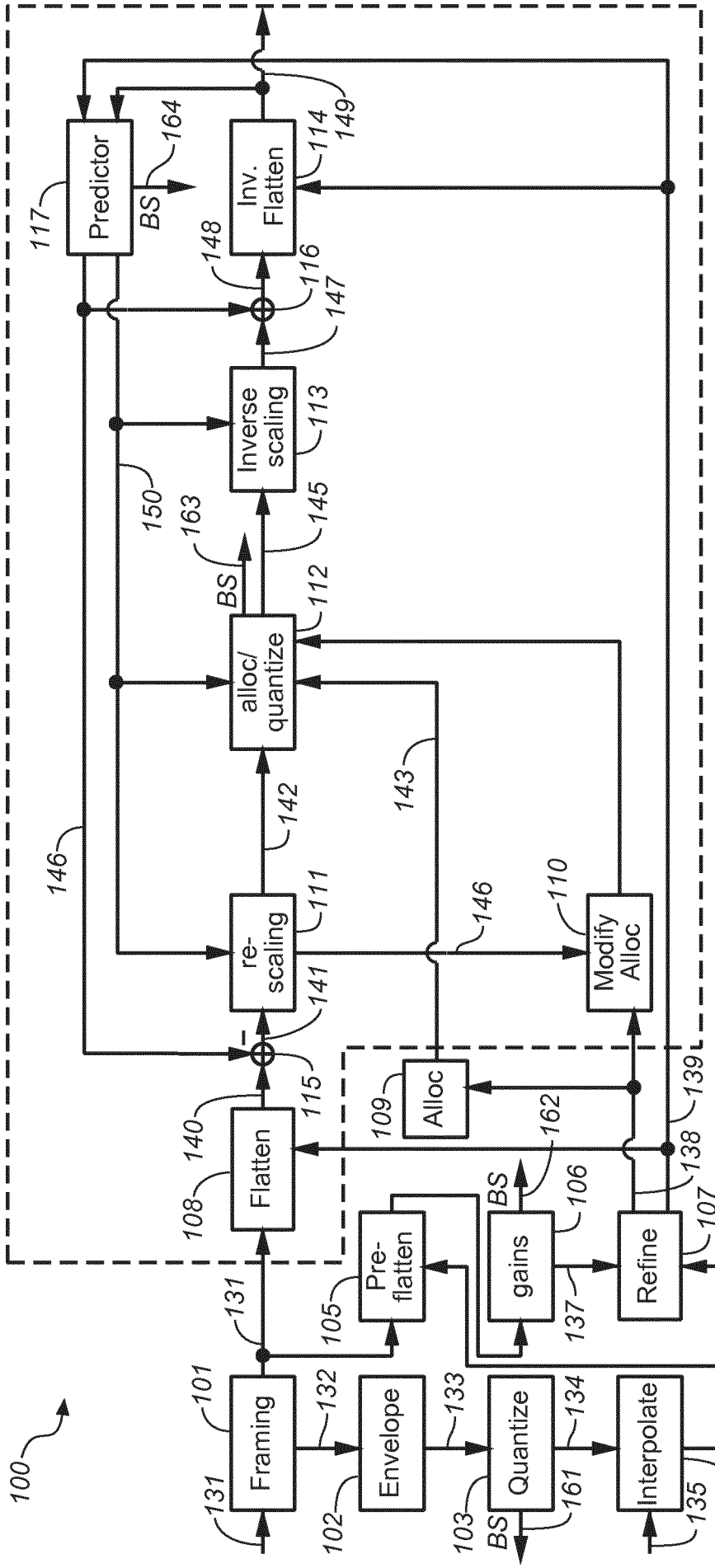
100
Framing
Envelope
Quantize
Interpolate
Pre-flatten
gains
Refine
Flatten
Alloc
re-scaling
alloc/ quantize
Inverse scaling
Inv. Flatten
Predictor
Modify Alloc
BS
101
102
103
104
105
106
107
108
109
110
111
112
113
114
115
116
117
131
132
133
134
135
136
137
138
139
140
141
142
143
145
146
147
148
149
150
161
162
163
164

FIG. 1A

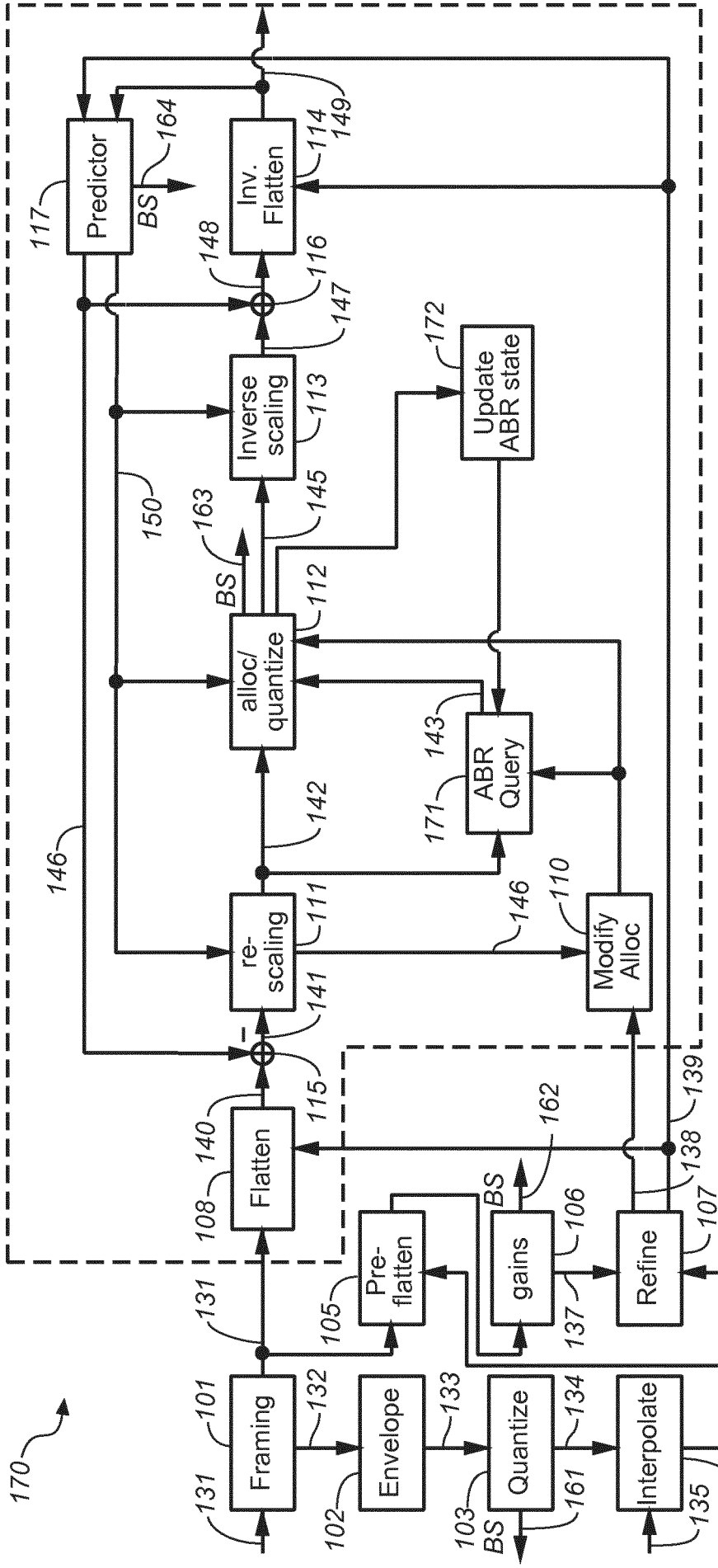
170
Framing
Envelope
Quantize
Interpolate
Pre-flatten
gains
Refine
Flatten
re-scaling
alloc/quantize
Inverse scaling
Inv. Flatten
Predictor
Update ABR state
ABR Query
Modify Alloc
BS
101
102
103
104
105
106
107
108
110
111
112
113
114
115
116
117
131
132
133
134
135
136
137
138
139
140
141
142
143
145
146
147
148
149
150
161
162
163
164
171
172

FIG. 1B

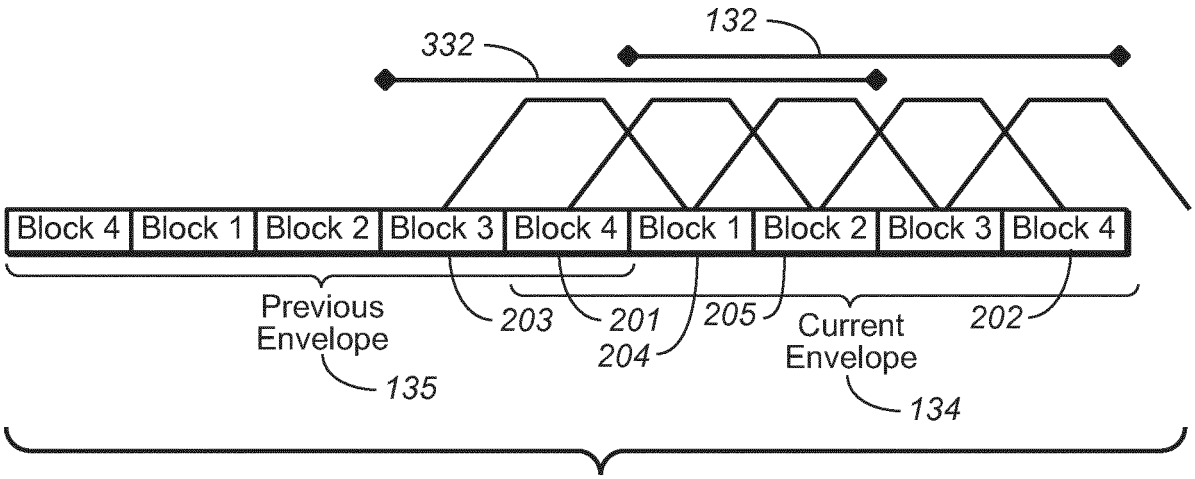
132
332
Block 4
Block 1
Block 2
Block 3
Block 4
Block 1
Block 2
Block 3
Block 4
Previous Envelope
135
203
201
204
205
Current Envelope
134
202

FIG. 2

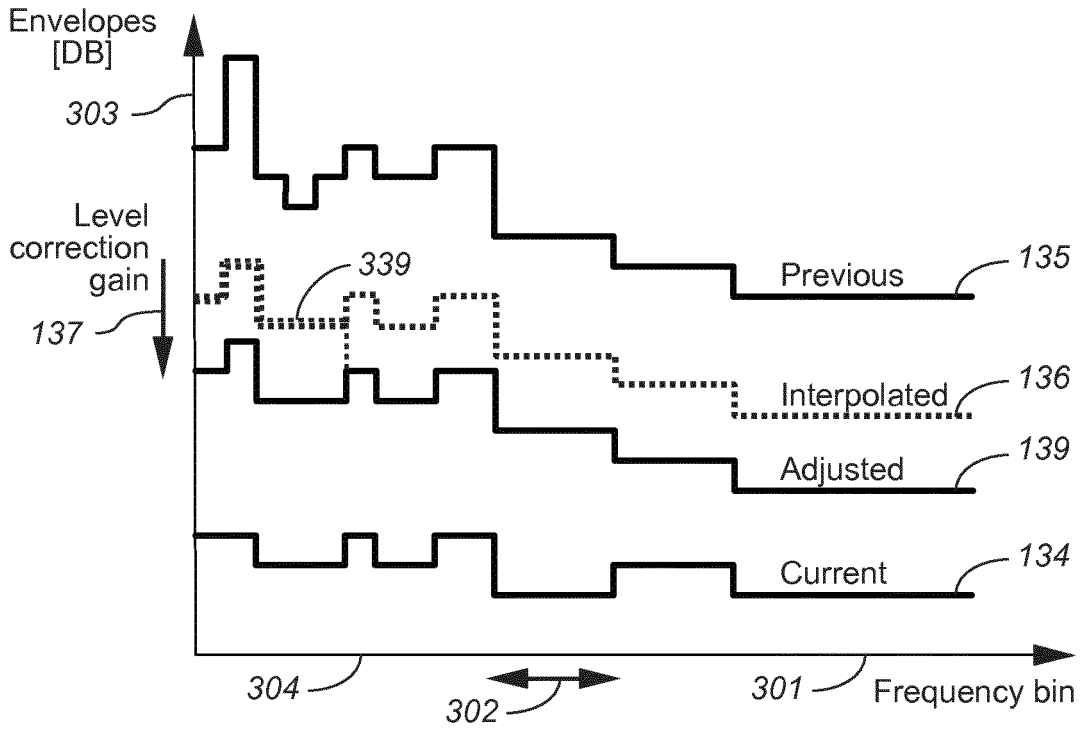
Envelopes [DB]
303
Level correction gain
137
339
Previous
135
Interpolated
136
Adjusted
139
Current
134
304
302
301
Frequency bin

FIG. 3A

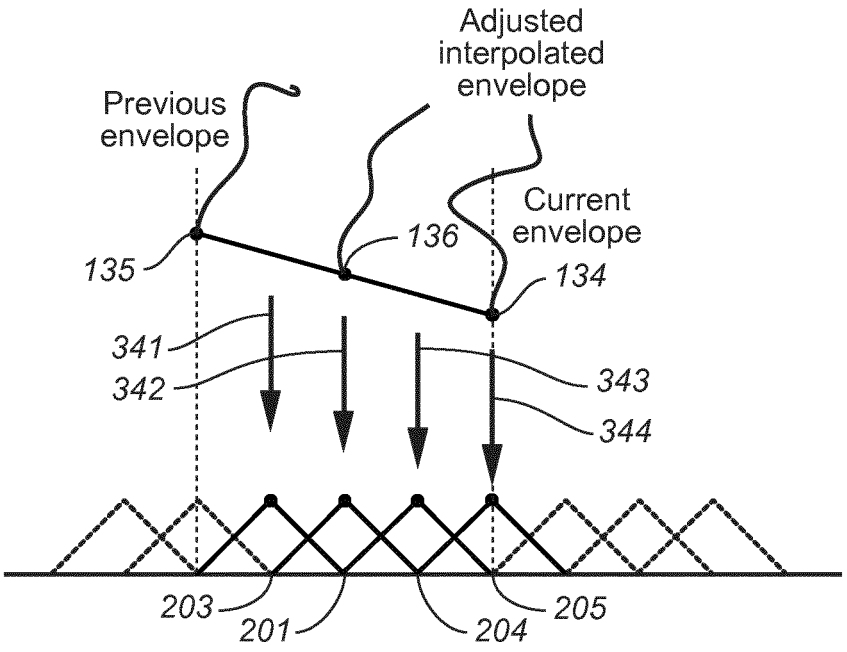
Adjusted
interpolated
envelope
Previous
envelope
Current
envelope
135
136
134
341
342
343
344
203
201
204
205

FIG. 3B

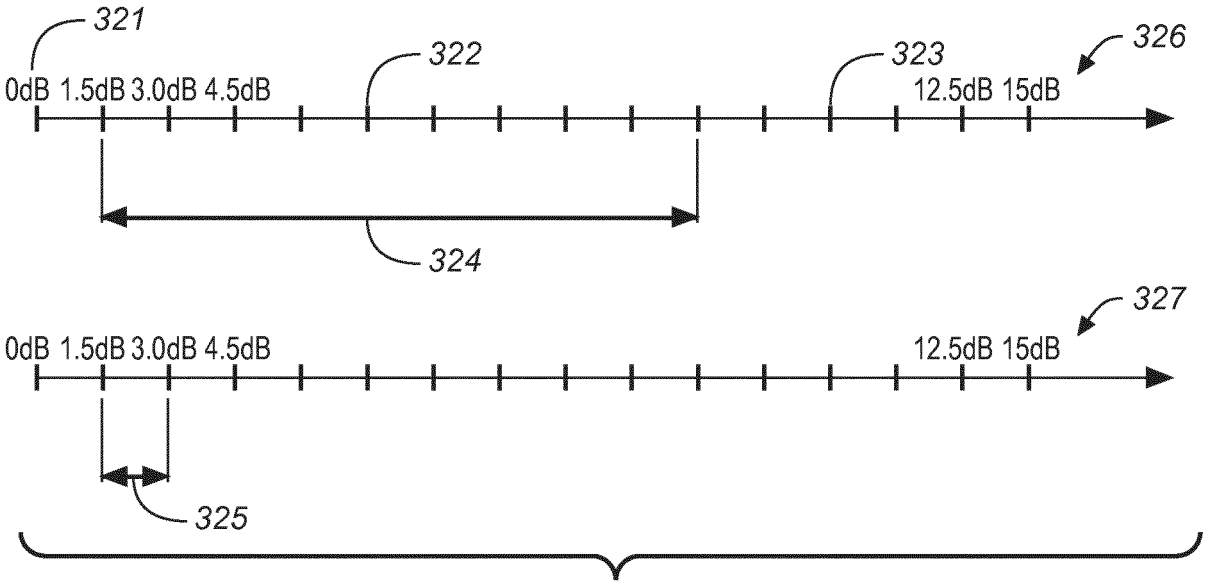
321
322
323
326
0dB 1.5dB 3.0dB 4.5dB
12.5dB 15dB
324
327
0dB 1.5dB 3.0dB 4.5dB
12.5dB 15dB
325

FIG. 4

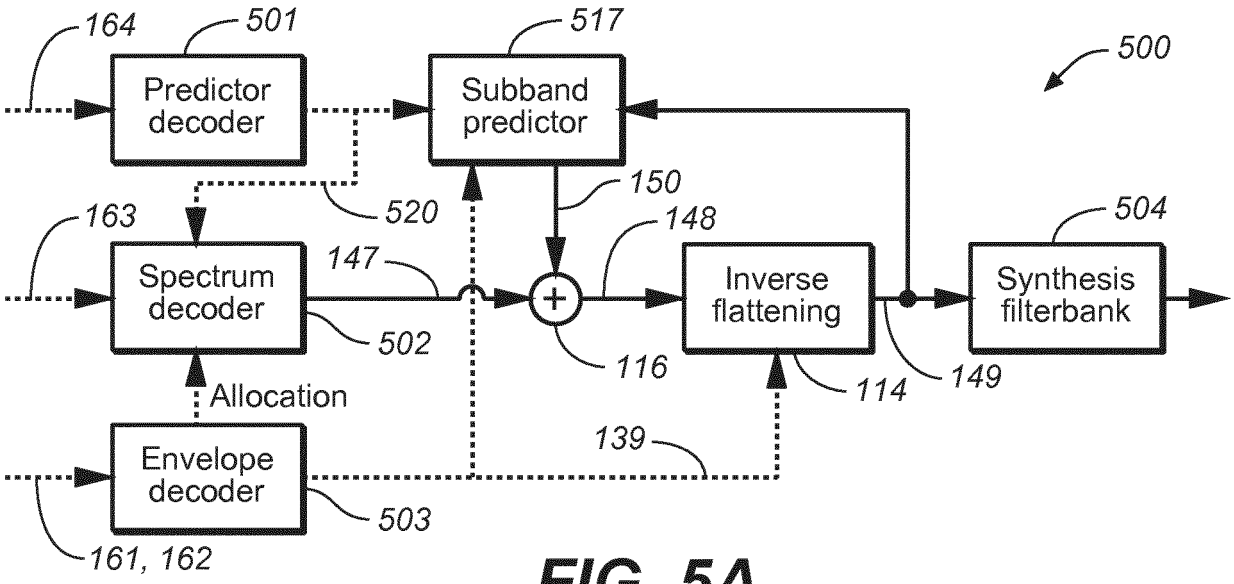
164
501
517
500
Predictor decoder
Subband predictor
520
150
163
148
504
Spectrum decoder
147
Inverse flattening
Synthesis filterbank
502
116
114
149
Allocation
139
Envelope decoder
503
161, 162

FIG. 5A

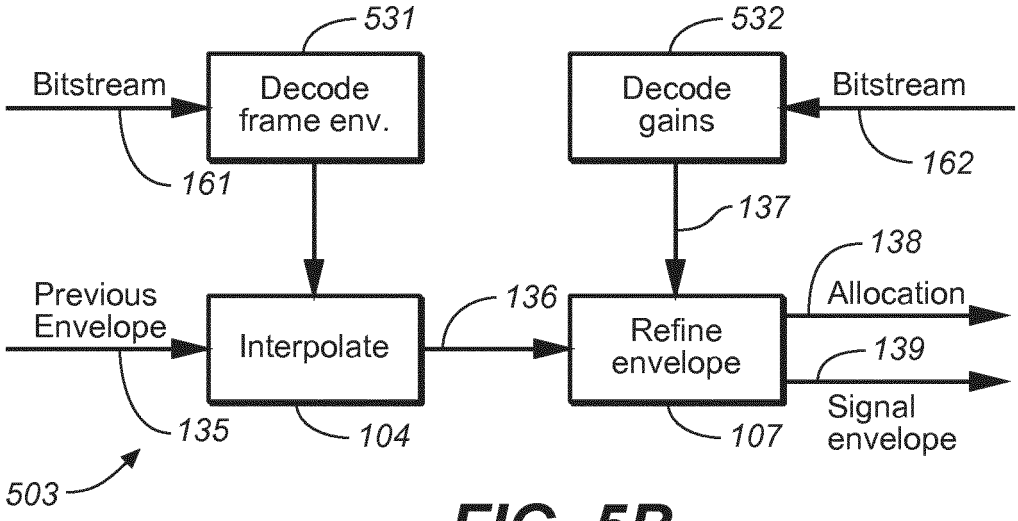
531
532
Bitstream
Decode frame env.
Decode gains
Bitstream
161
162
137
138
Previous Envelope
136
Interpolate
Refine envelope
Allocation
139
135
104
107
Signal envelope
503

FIG. 5B

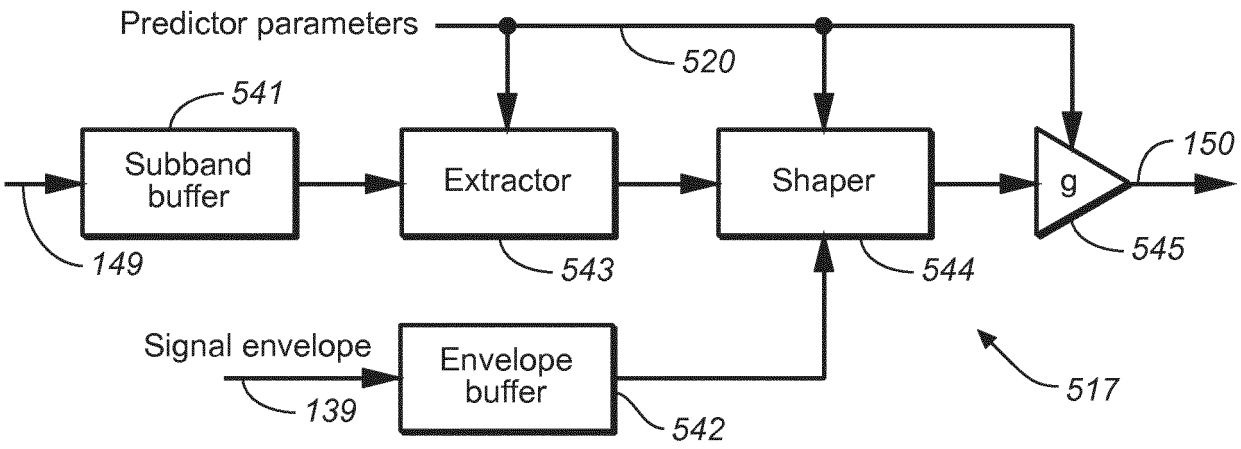
Predictor parameters
520
541
Subband buffer
Extractor
Shaper
g
150
149
543
544
545
Signal envelope
Envelope buffer
139
542
517

FIG. 5C

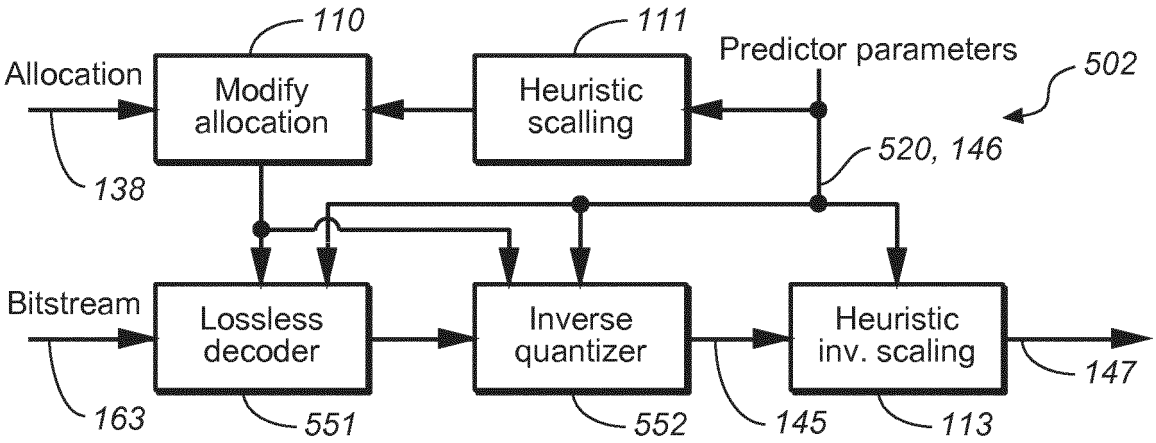
110
111
Predictor parameters
502
Allocation
Modify allocation
Heuristic scalling
520, 146
138
Bitstream
Lossless decoder
Inverse quantizer
Heuristic inv. scaling
147
163
551
552
145
113

FIG. 5D