FIG.1

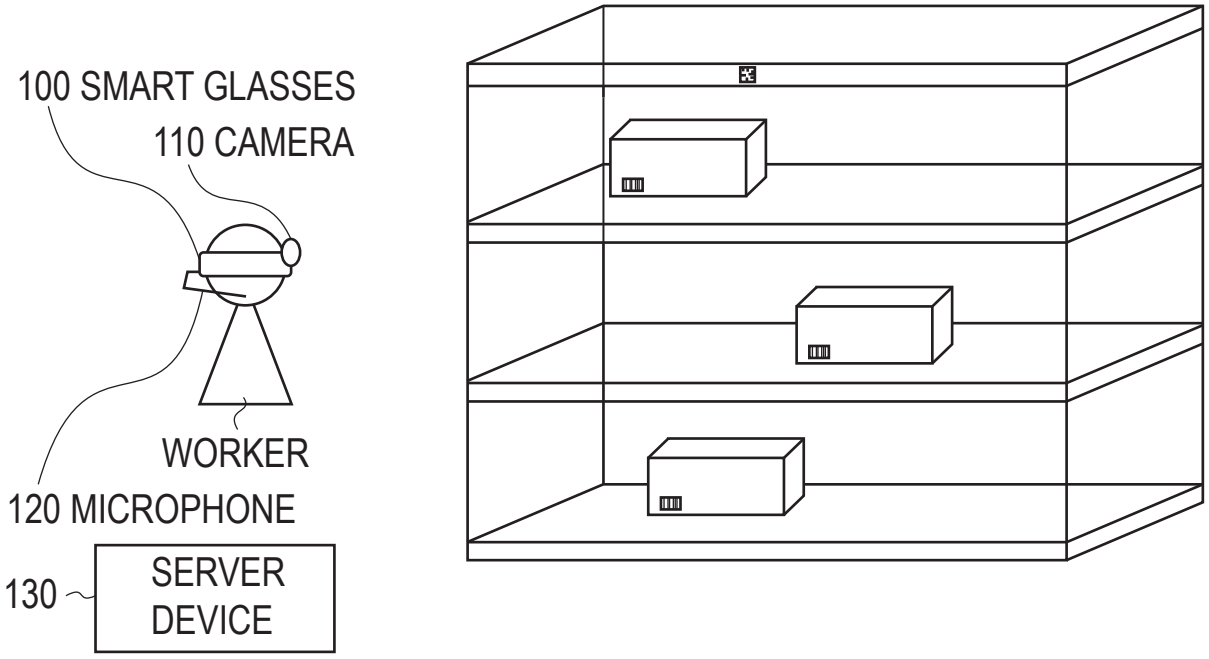
100 SMART GLASSES
110 CAMERA
WORKER
120 MICROPHONE
130
SERVER DEVICE

FIG.2

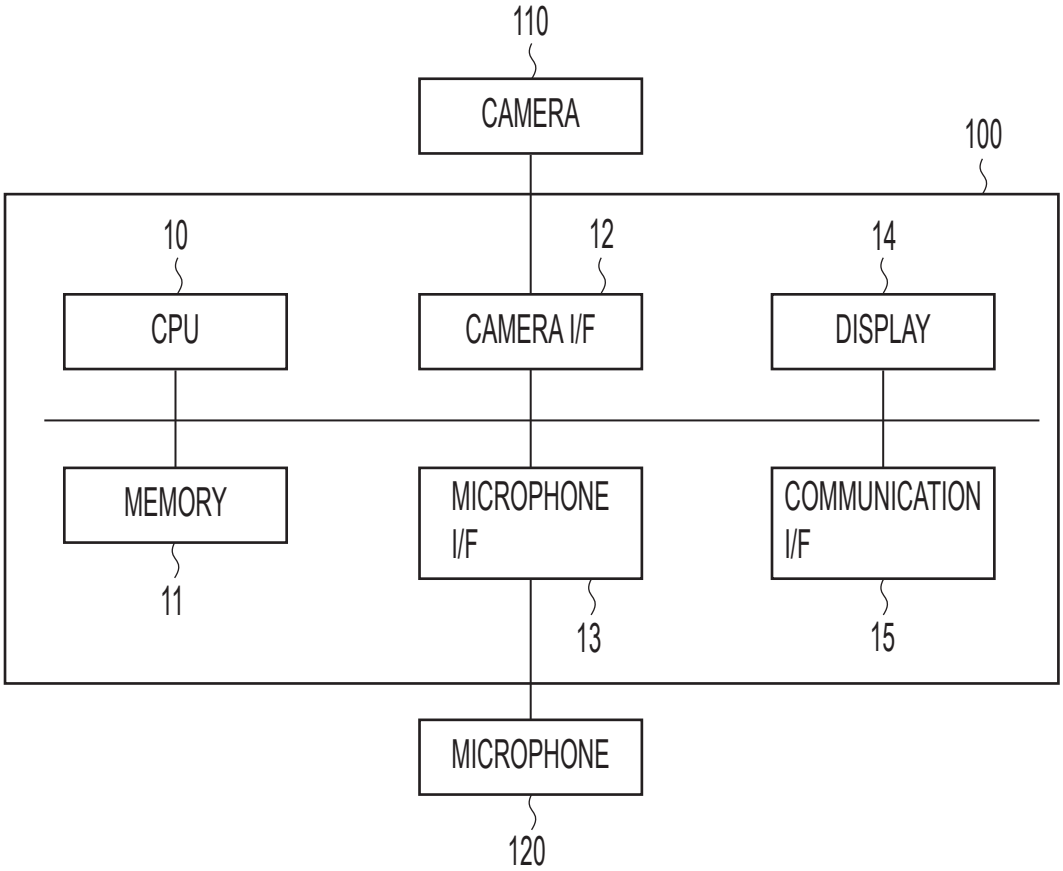
110
CAMERA
100
10
12
14
CPU
CAMERA I/F
DISPLAY
MEMORY
MICROPHONE I/F
COMMUNICATION I/F
11
13
15
MICROPHONE
120

FIG.3

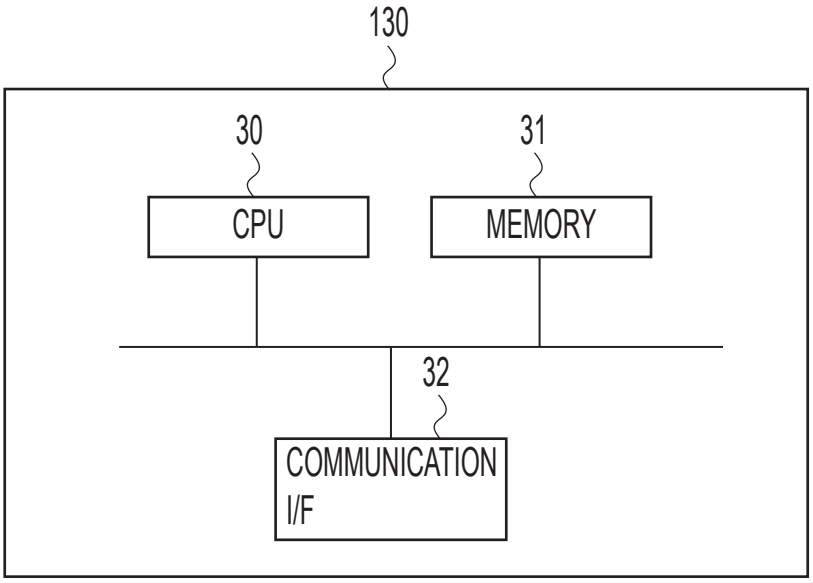

FIG.4

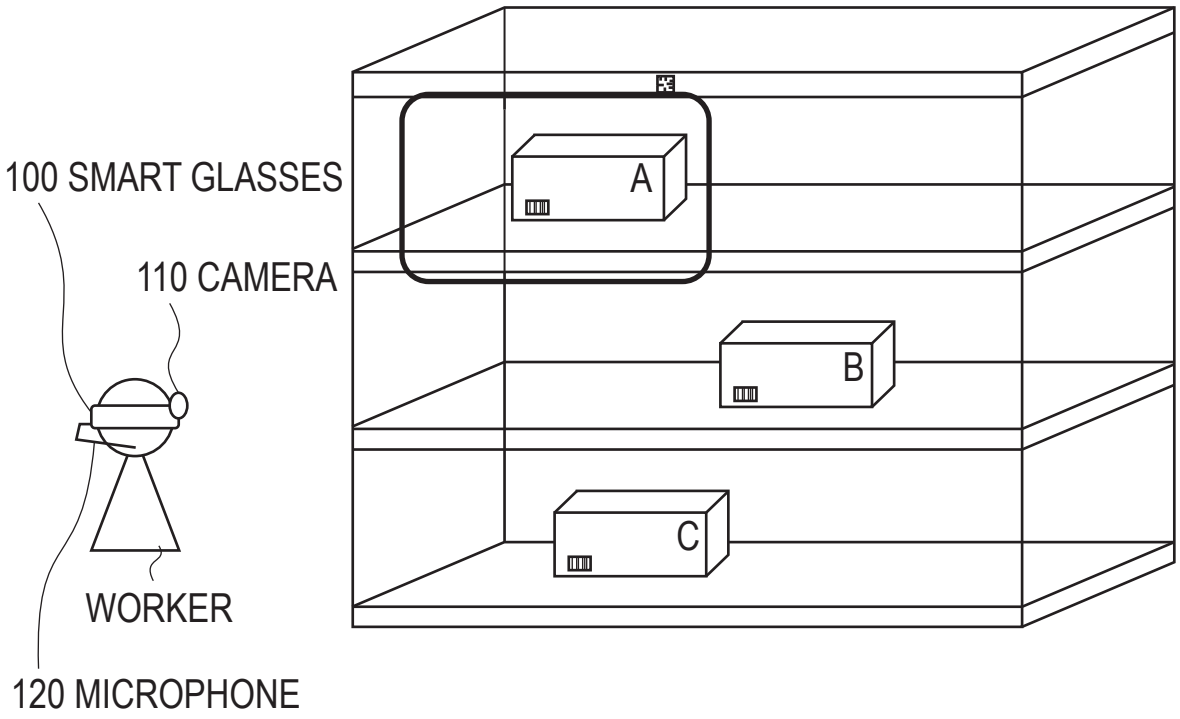

FIG.5

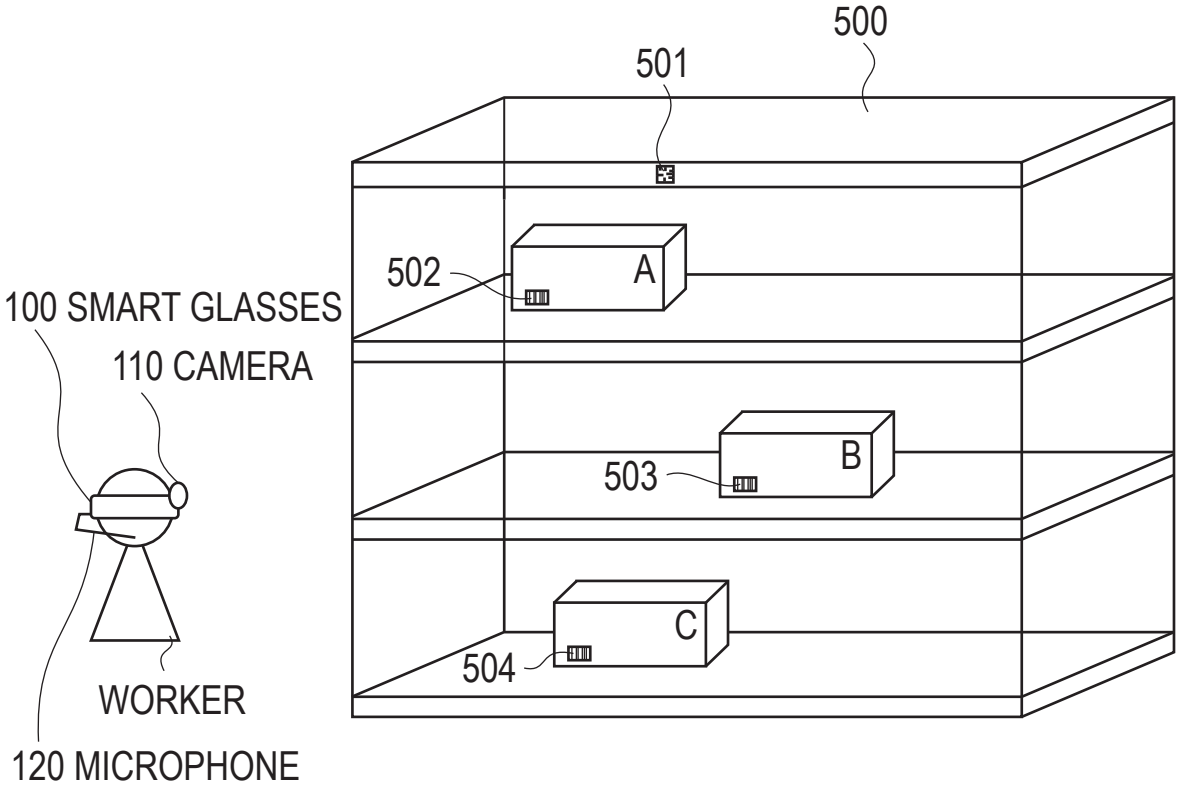
500
501
502
A
100 SMART GLASSES
110 CAMERA
503
B
C
504
WORKER
120 MICROPHONE

FIG.6

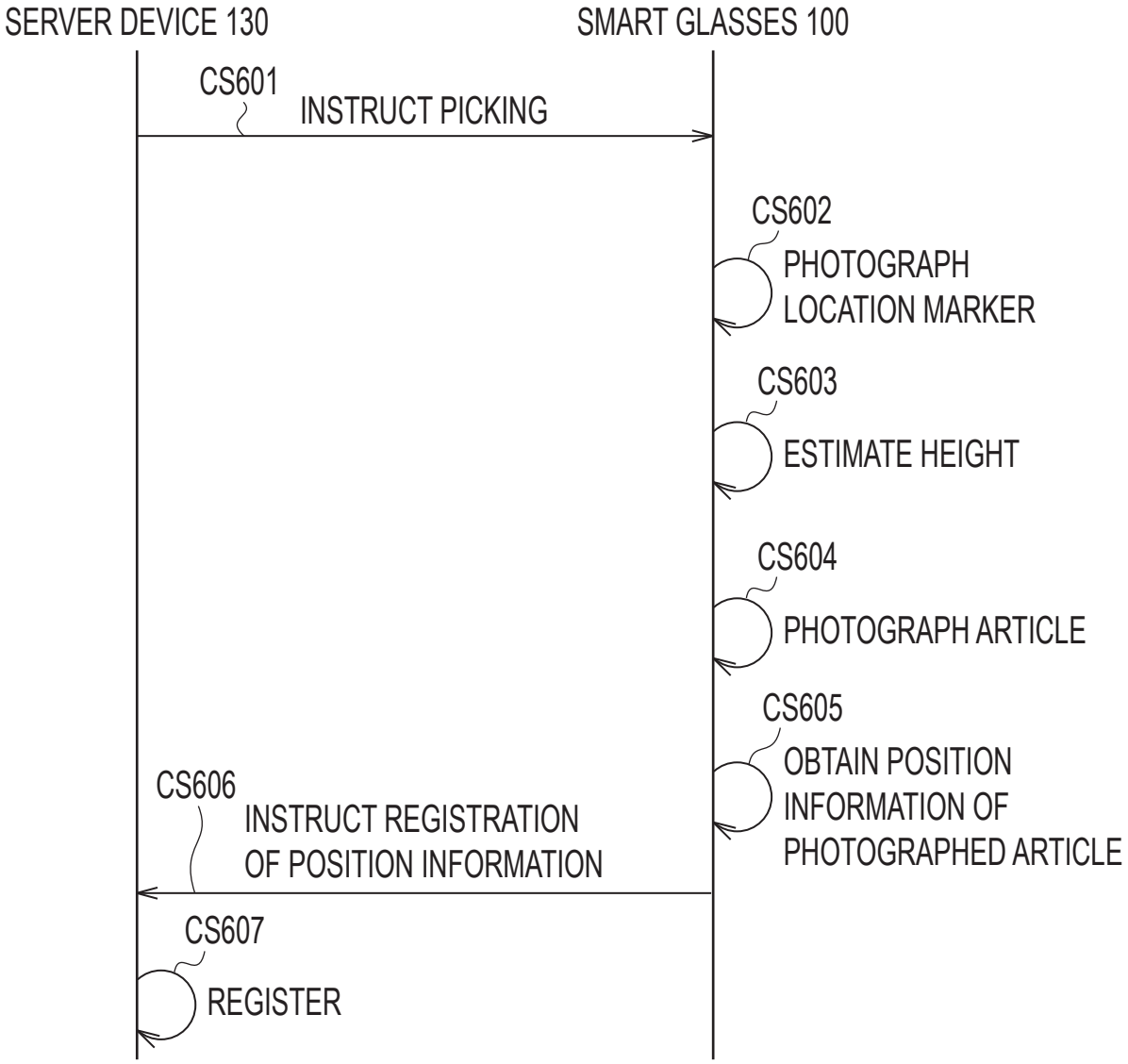
SERVER DEVICE 130
SMART GLASSES 100
CS601
INSTRUCT PICKING
CS602
PHOTOGRAPH LOCATION MARKER
CS603
ESTIMATE HEIGHT
CS604
PHOTOGRAPH ARTICLE
CS605
OBTAIN POSITION INFORMATION OF PHOTOGRAPHED ARTICLE
CS606
INSTRUCT REGISTRATION OF POSITION INFORMATION
CS607
REGISTER

FIG.7

PLEASE PICK FOLLOWING COMMODITY!

LOCATION：100－100
COMMODITY CODE：123456789
COMMODITY NAME：ARTICLE C
QUANTITY：1 PIECE

FIG.8

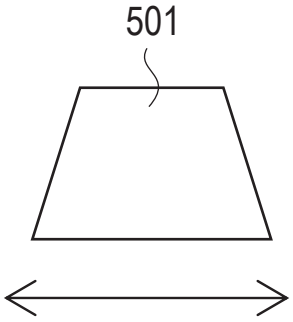

FIG.9

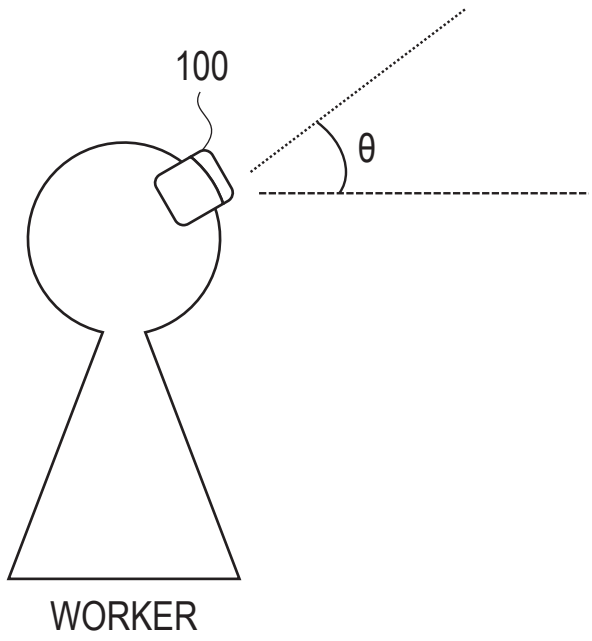

FIG.10

BOTTOM SIDE LENGTH (PIXEL)	θ (°)	HEIGHT
○○ pixel to ×× pixel	10°±5°	180
△△ pixel to □□ pixel	15°±5°	170
:	:	:

FIG.11

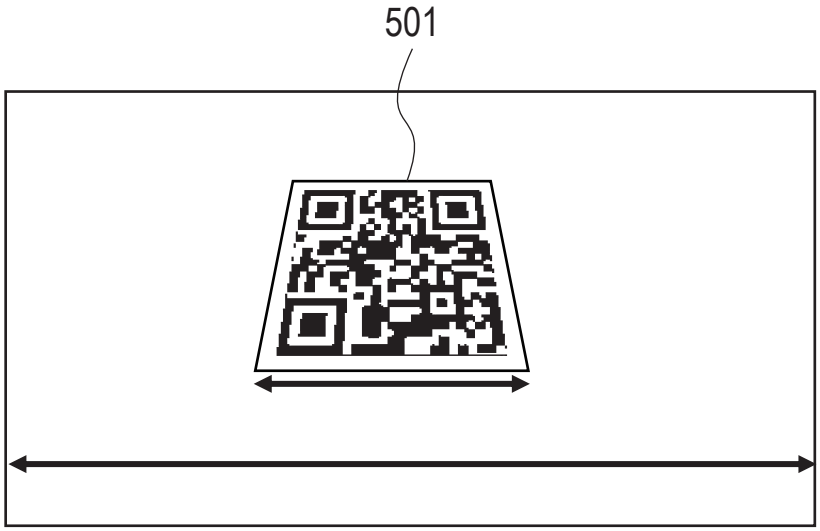

FIG.12

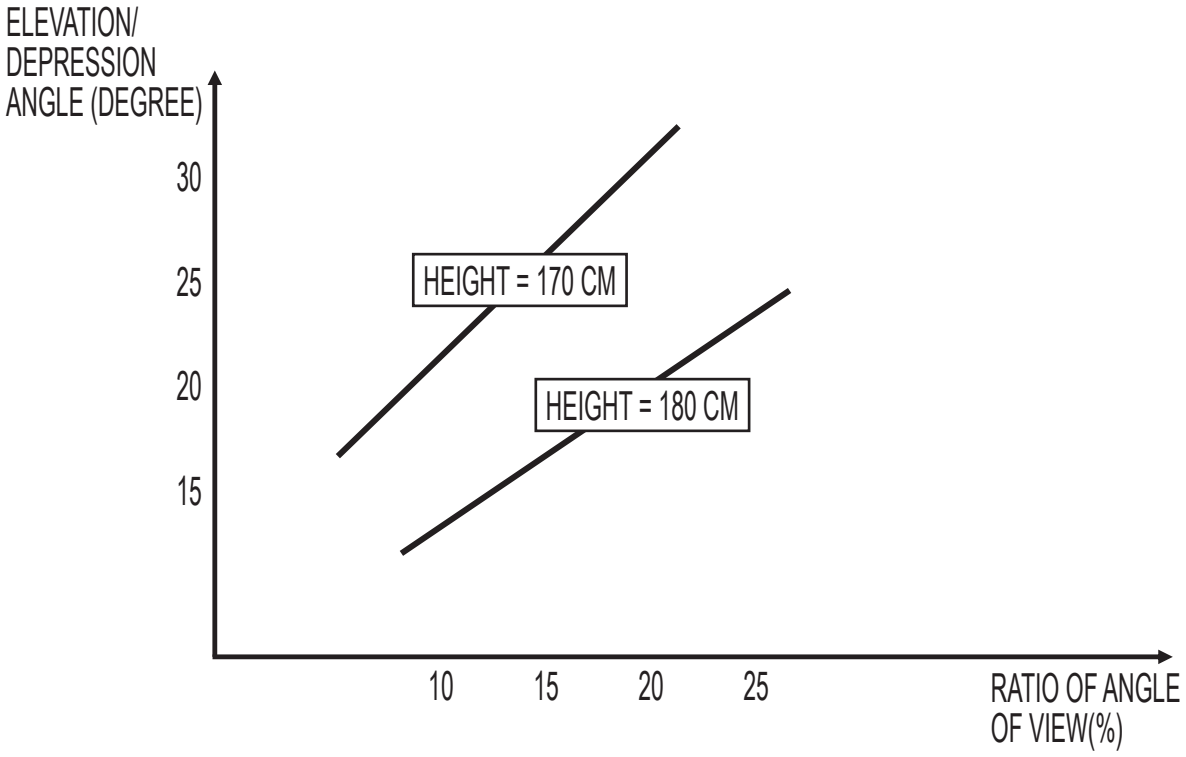
ELEVATION/
DEPRESSION
ANGLE (DEGREE)
30
25
20
15
HEIGHT = 170 CM
HEIGHT = 180 CM
10
15
20
25
RATIO OF ANGLE
OF VIEW(%)

FIG.13

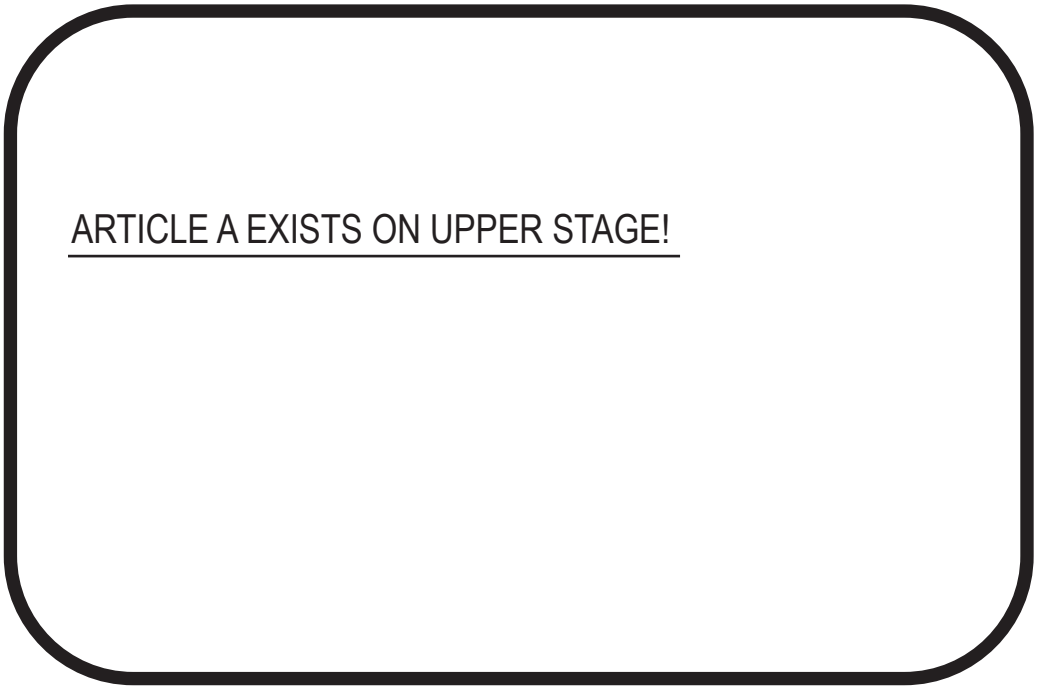

FIG.14

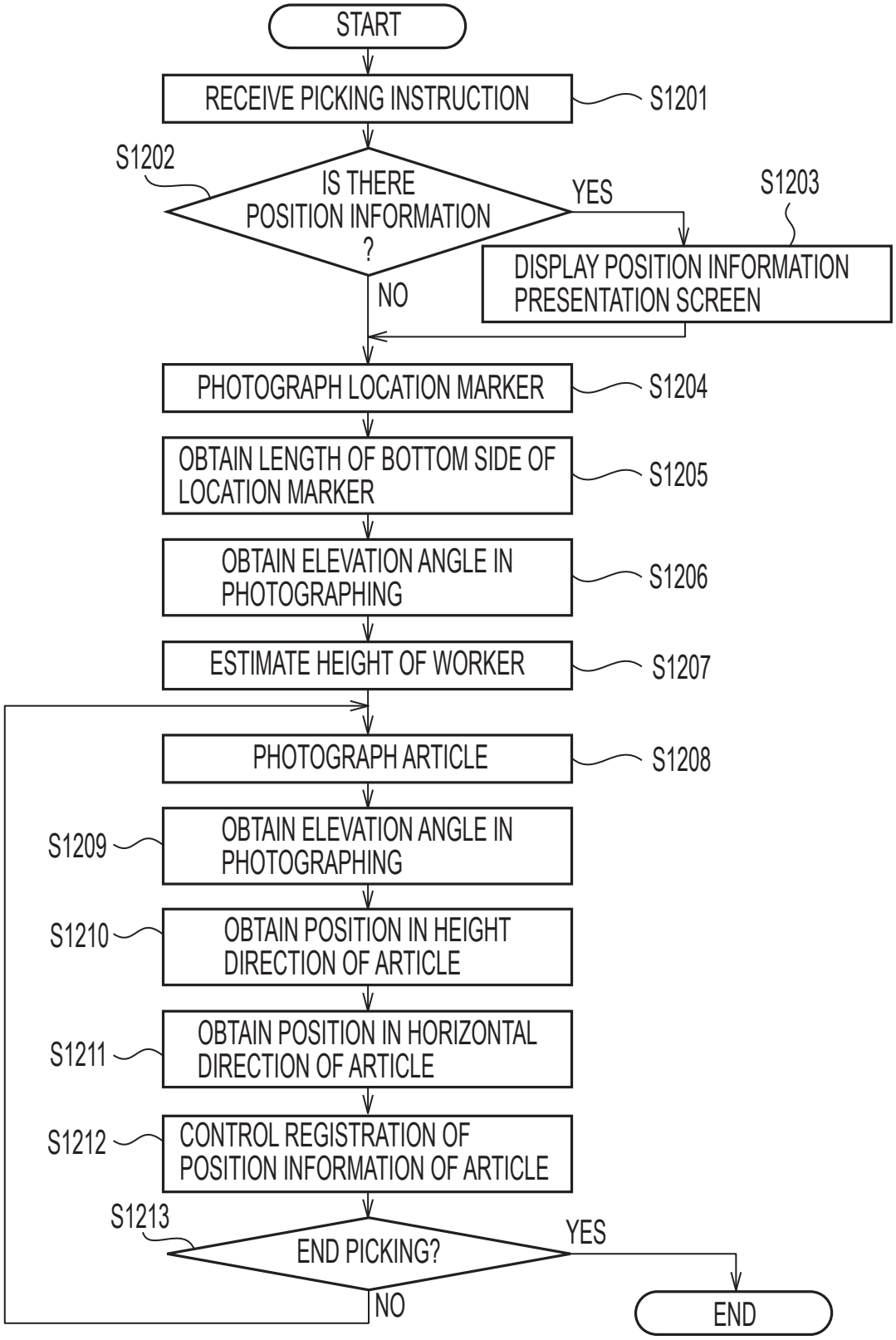
START
RECEIVE PICKING INSTRUCTION
S1201
S1202
IS THERE POSITION INFORMATION ?
YES
S1203
DISPLAY POSITION INFORMATION PRESENTATION SCREEN
NO
PHOTOGRAPH LOCATION MARKER
S1204
OBTAIN LENGTH OF BOTTOM SIDE OF LOCATION MARKER
S1205
OBTAIN ELEVATION ANGLE IN PHOTOGRAPHING
S1206
ESTIMATE HEIGHT OF WORKER
S1207
PHOTOGRAPH ARTICLE
S1208
S1209
OBTAIN ELEVATION ANGLE IN PHOTOGRAPHING
S1210
OBTAIN POSITION IN HEIGHT DIRECTION OF ARTICLE
S1211
OBTAIN POSITION IN HORIZONTAL DIRECTION OF ARTICLE
S1212
CONTROL REGISTRATION OF POSITION INFORMATION OF ARTICLE
S1213
END PICKING?
YES
NO
END

FIG.15

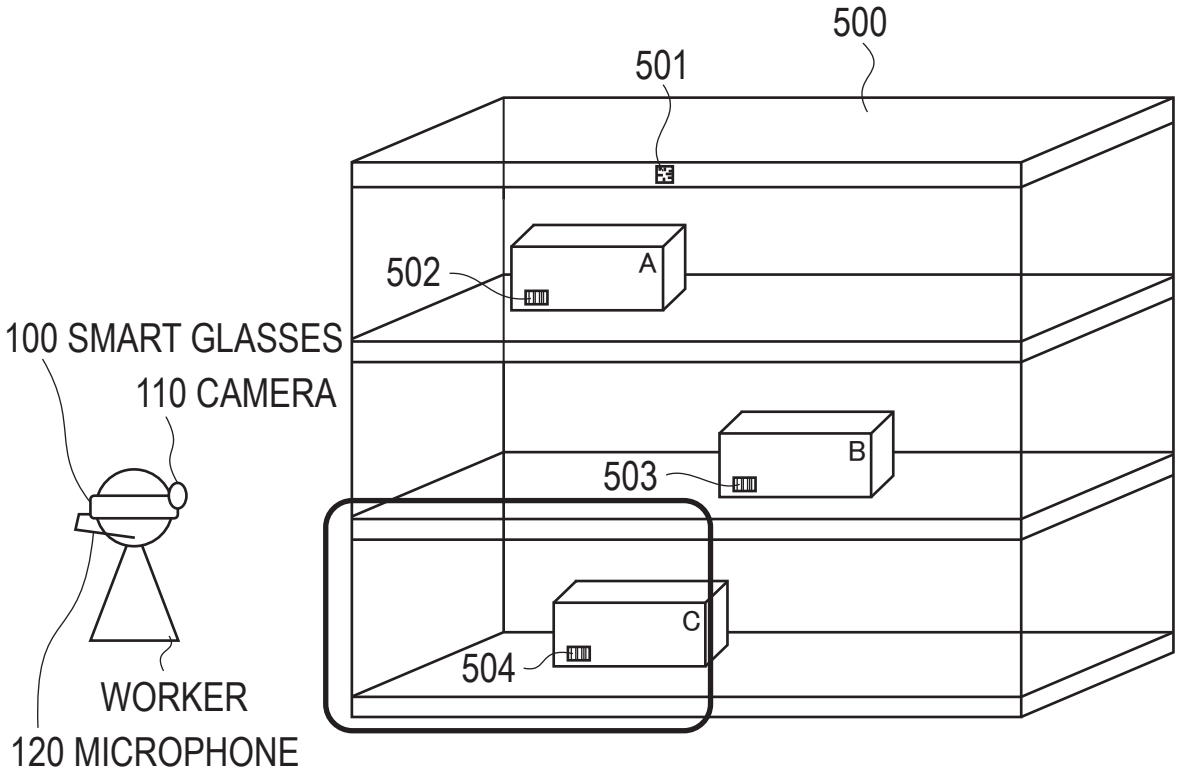
500
501
502
A
100 SMART GLASSES
110 CAMERA
B
503
C
504
WORKER
120 MICROPHONE

FIG.16

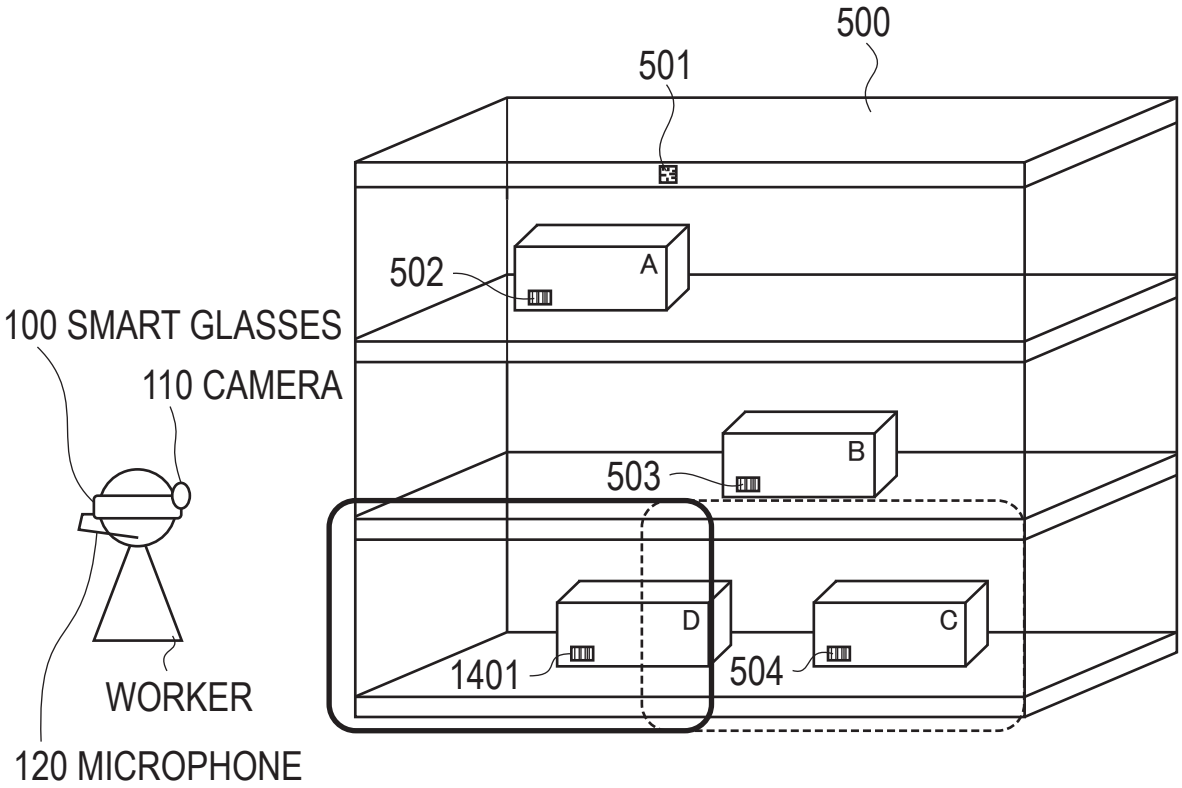
500
501
502
A
100 SMART GLASSES
110 CAMERA
B
503
D
C
1401
504
WORKER
120 MICROPHONE

FIG.17

FIG.18

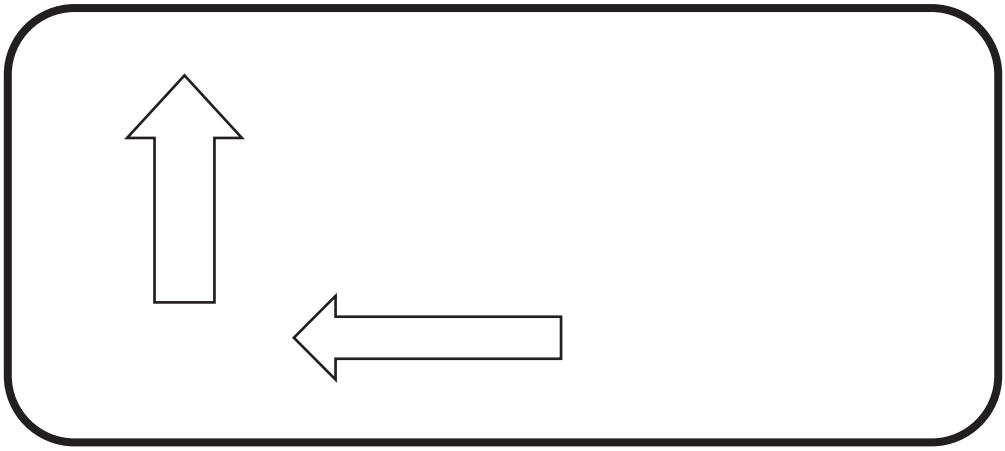

FIG.19

ARTICLE □ WAS EXISTING ON UPPER STAGE 10 MINUTES BEFORE!

FIG.20

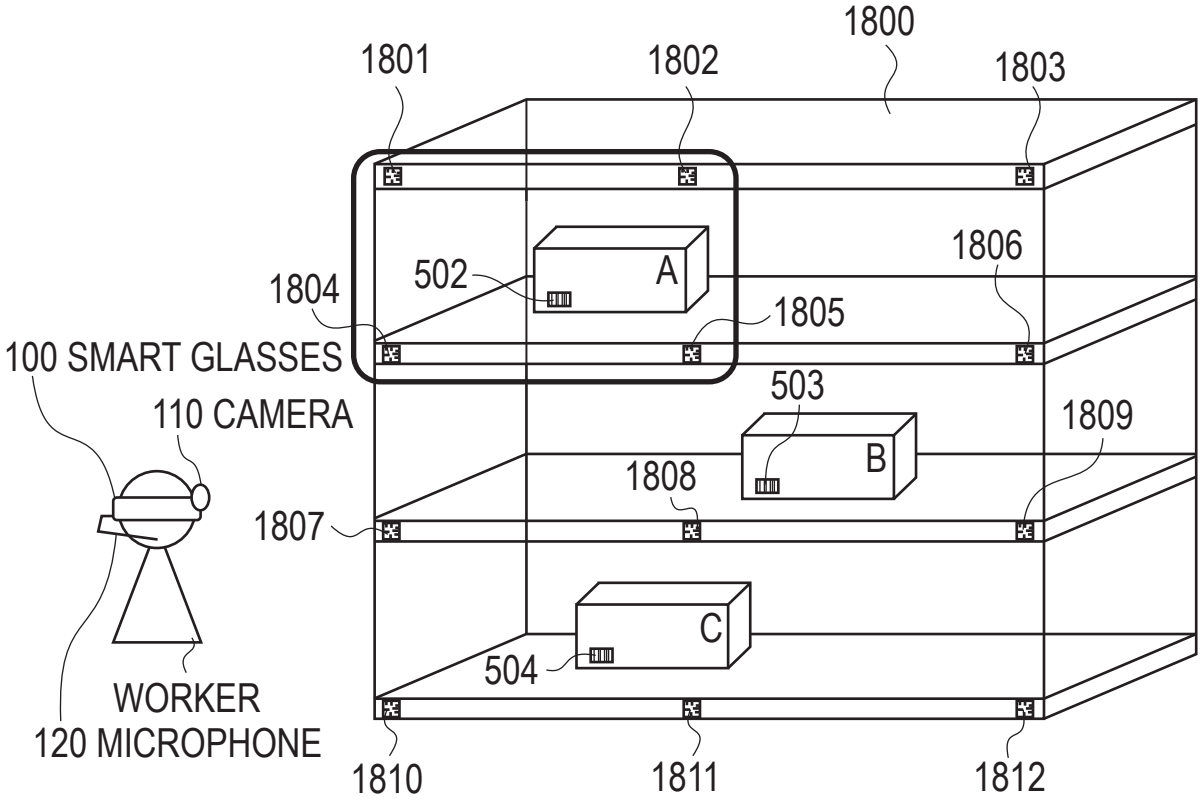
1800
1801
1802
1803
1804
1805
1806
1807
1808
1809
1810
1811
1812
502
503
504
A
B
C
100 SMART GLASSES
110 CAMERA
WORKER
120 MICROPHONE

FIG.21

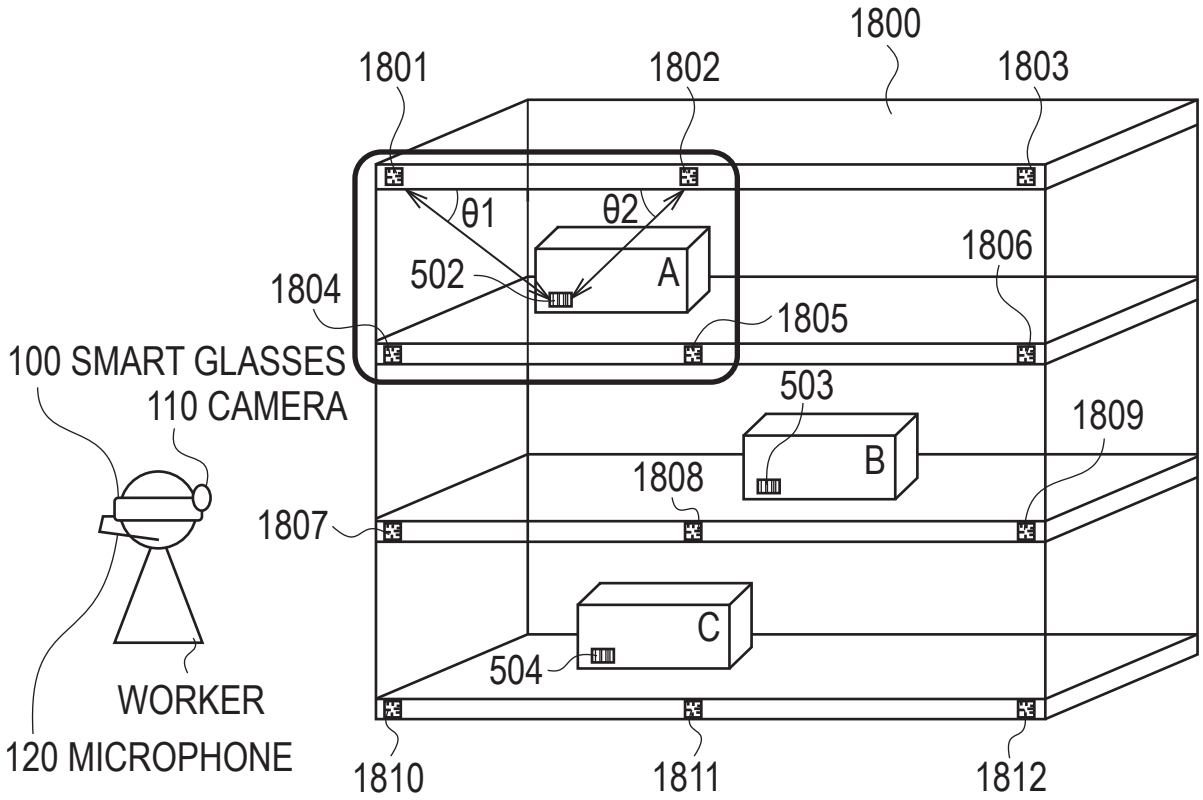
1800
1801
1802
1803
θ1
θ2
1806
502
A
1804
1805
100 SMART GLASSES
110 CAMERA
503
1809
B
1808
1807
C
504
WORKER
120 MICROPHONE
1810
1811
1812