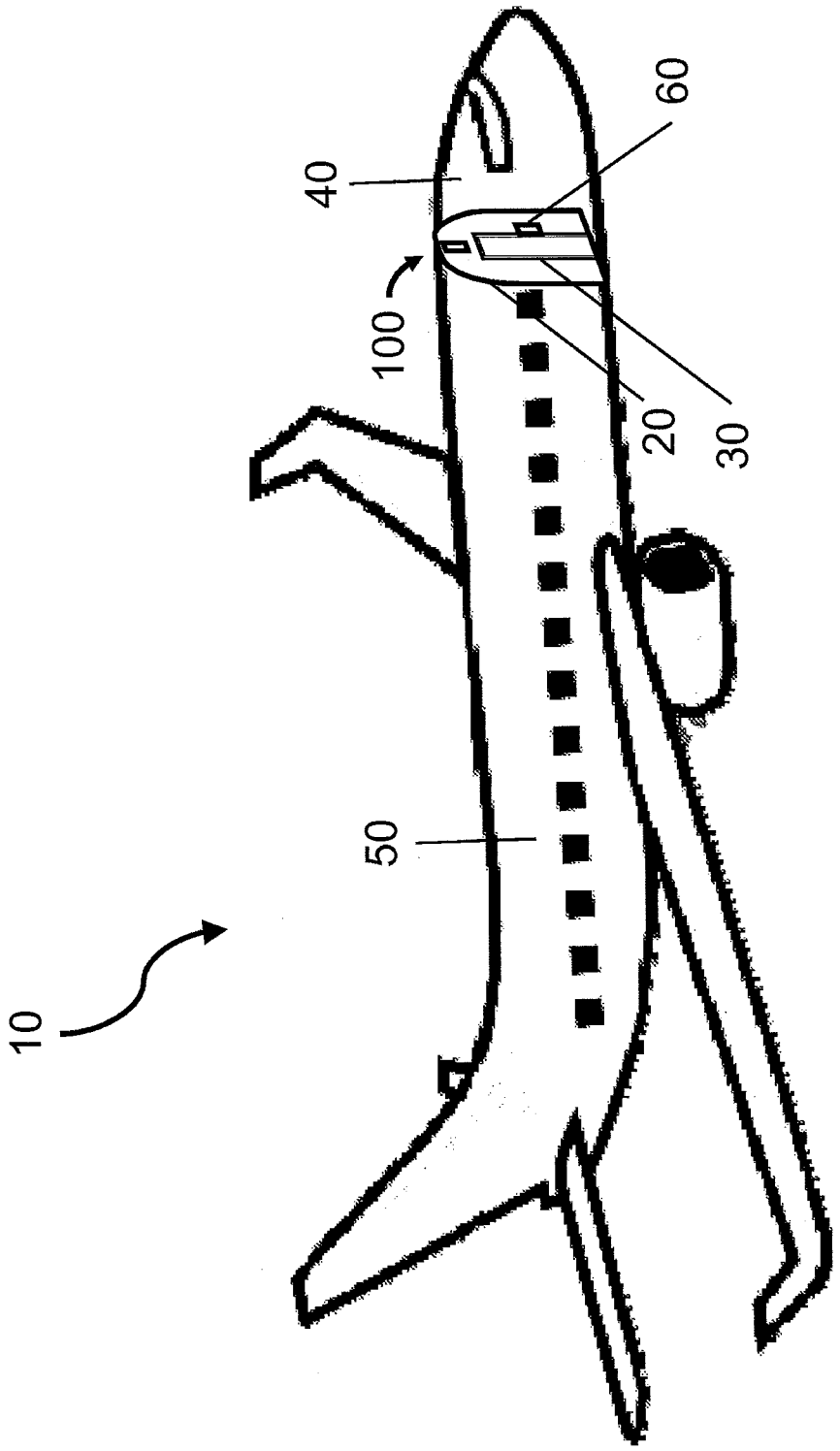

FIG. 1

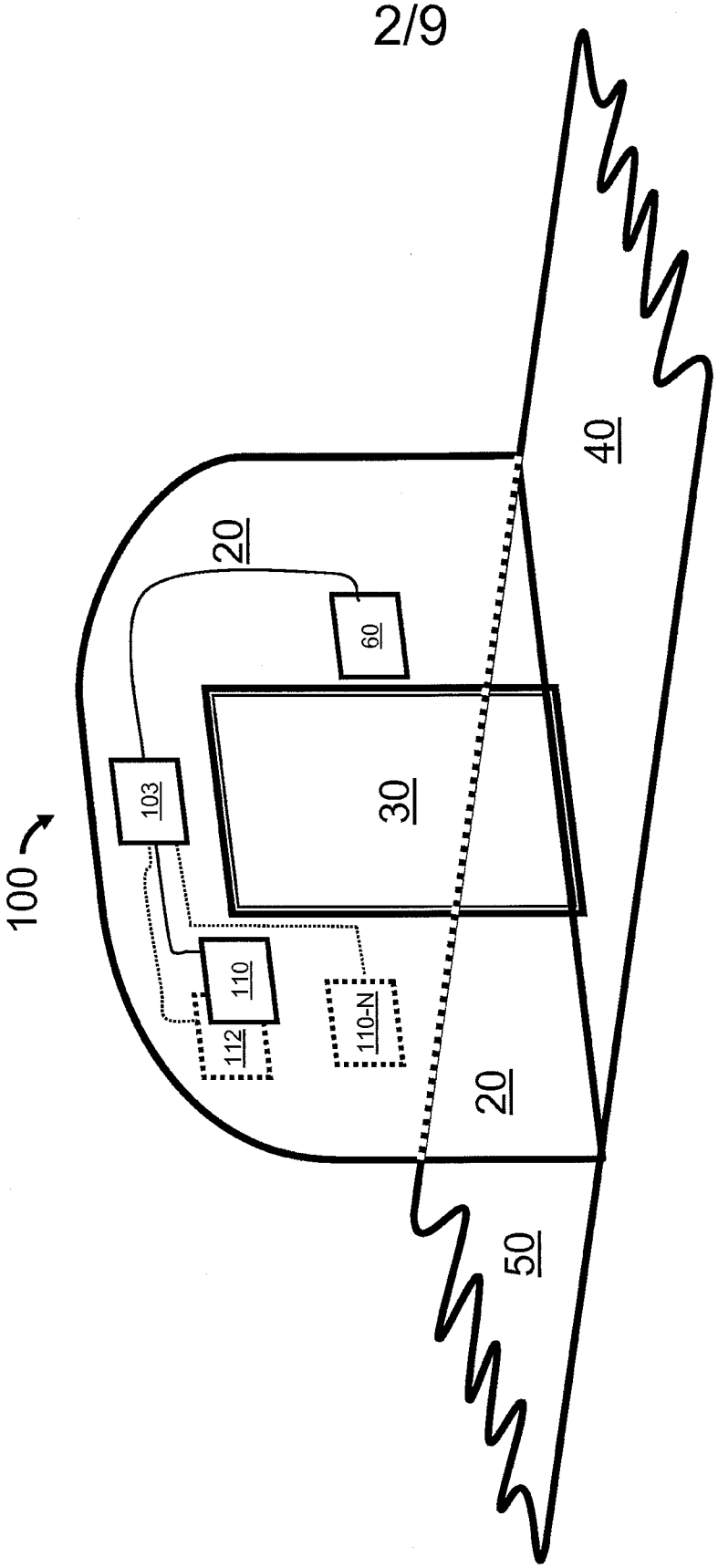

FIG. 2

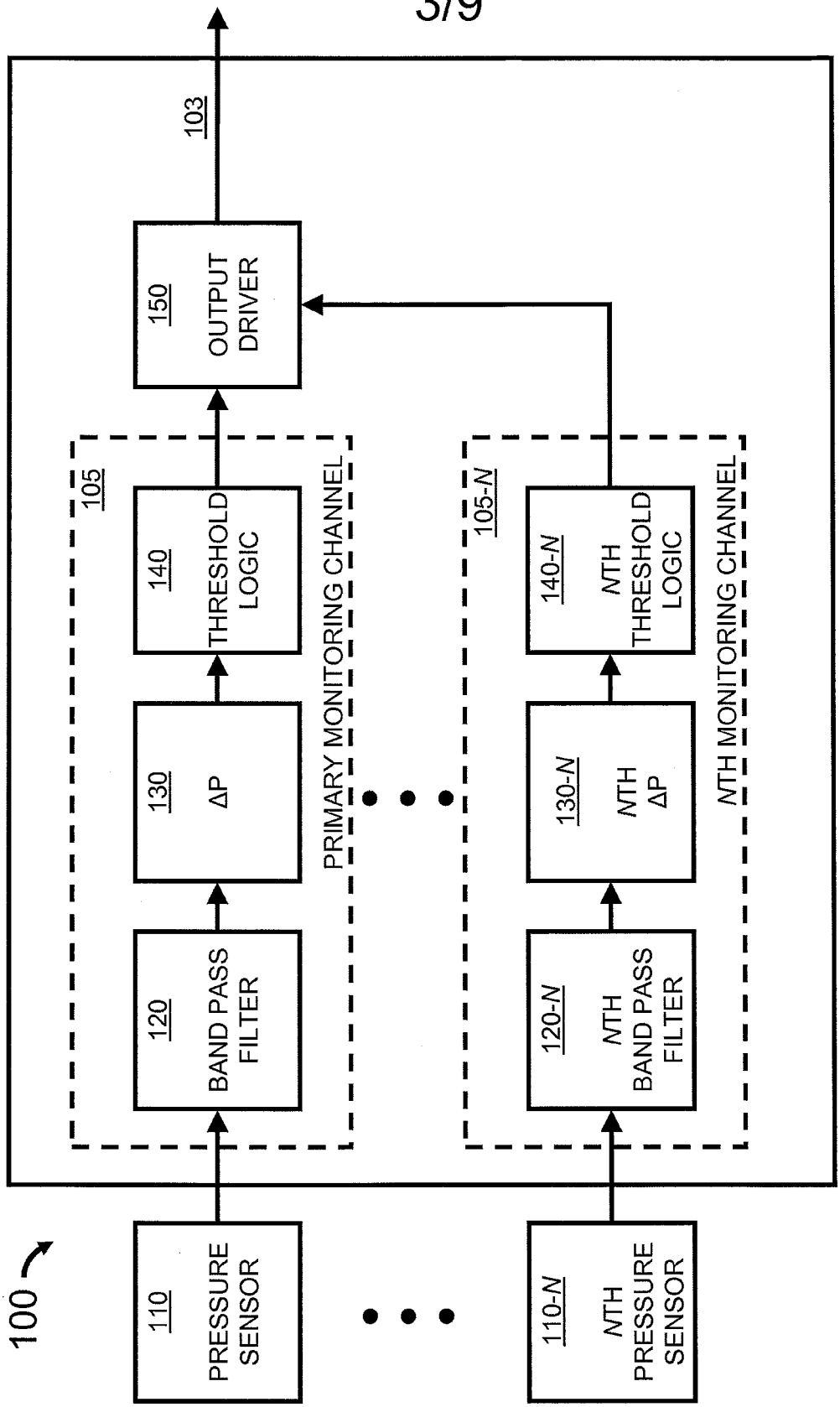
100
110
PRESSURE SENSOR
110-N
NTH PRESSURE SENSOR
120
BAND PASS FILTER
120-N
NTH BAND PASS FILTER
130
ΔP
130-N
NTH ΔP
140
THRESHOLD LOGIC
140-N
NTH THRESHOLD LOGIC
105
PRIMARY MONITORING CHANNEL
105-N
NTH MONITORING CHANNEL
150
OUTPUT DRIVER
103

FIG. 3A

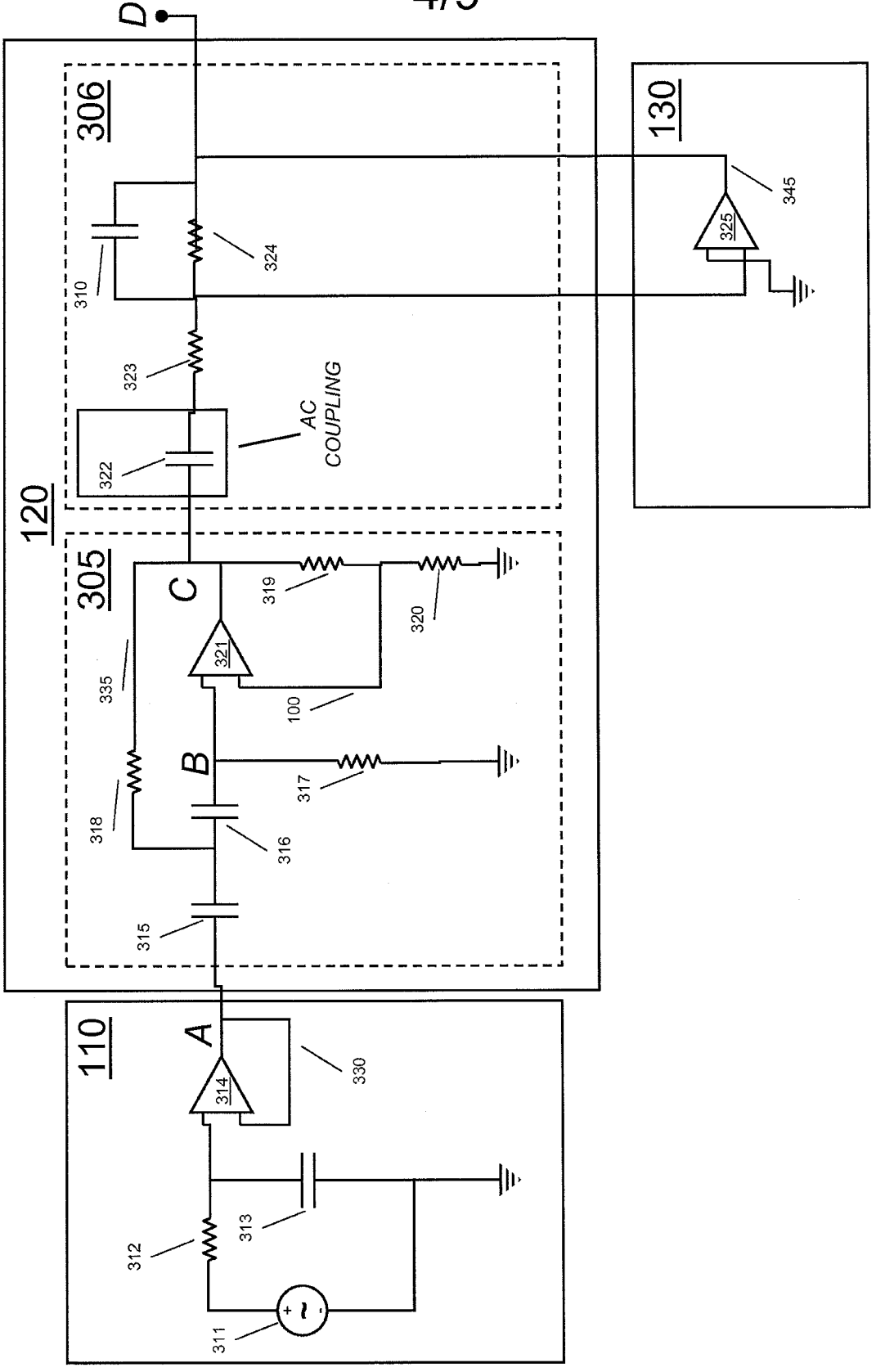
D
306
130
310
324
345
325
323
AC
COUPLING
322
120
305
C
319
320
321
335
100
B
317
318
316
315
110
A
314
330
312
313
311

FIG. 3B

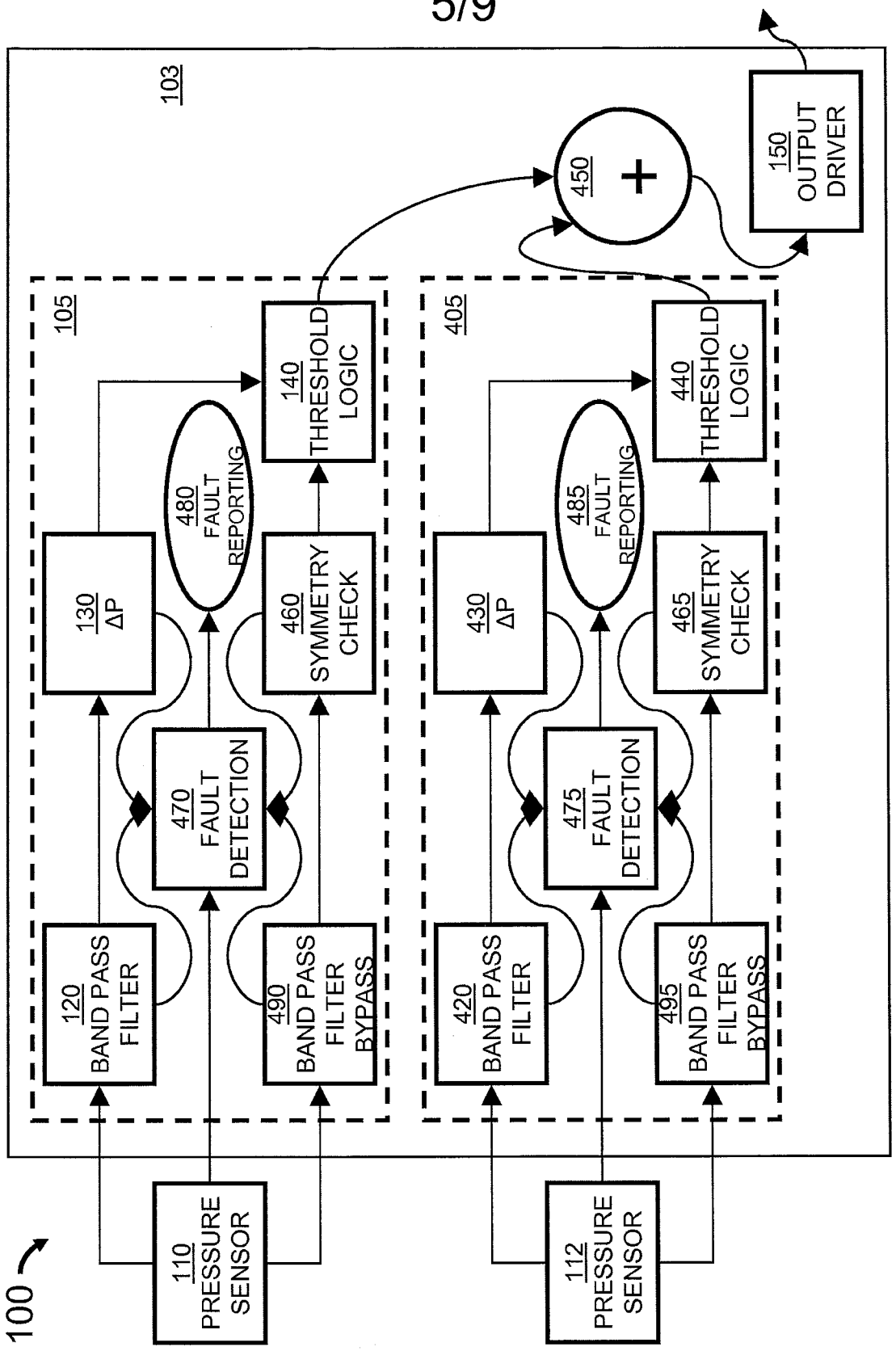
100
110 PRESSURE SENSOR
112 PRESSURE SENSOR
103
105
405
120 BAND PASS FILTER
130 ΔP
470 FAULT DETECTION
480 FAULT REPORTING
460 SYMMETRY CHECK
490 BAND PASS FILTER BYPASS
140 THRESHOLD LOGIC
420 BAND PASS FILTER
430 ΔP
475 FAULT DETECTION
485 FAULT REPORTING
465 SYMMETRY CHECK
495 BAND PASS FILTER BYPASS
440 THRESHOLD LOGIC
450 +
150 OUTPUT DRIVER

FIG. 4

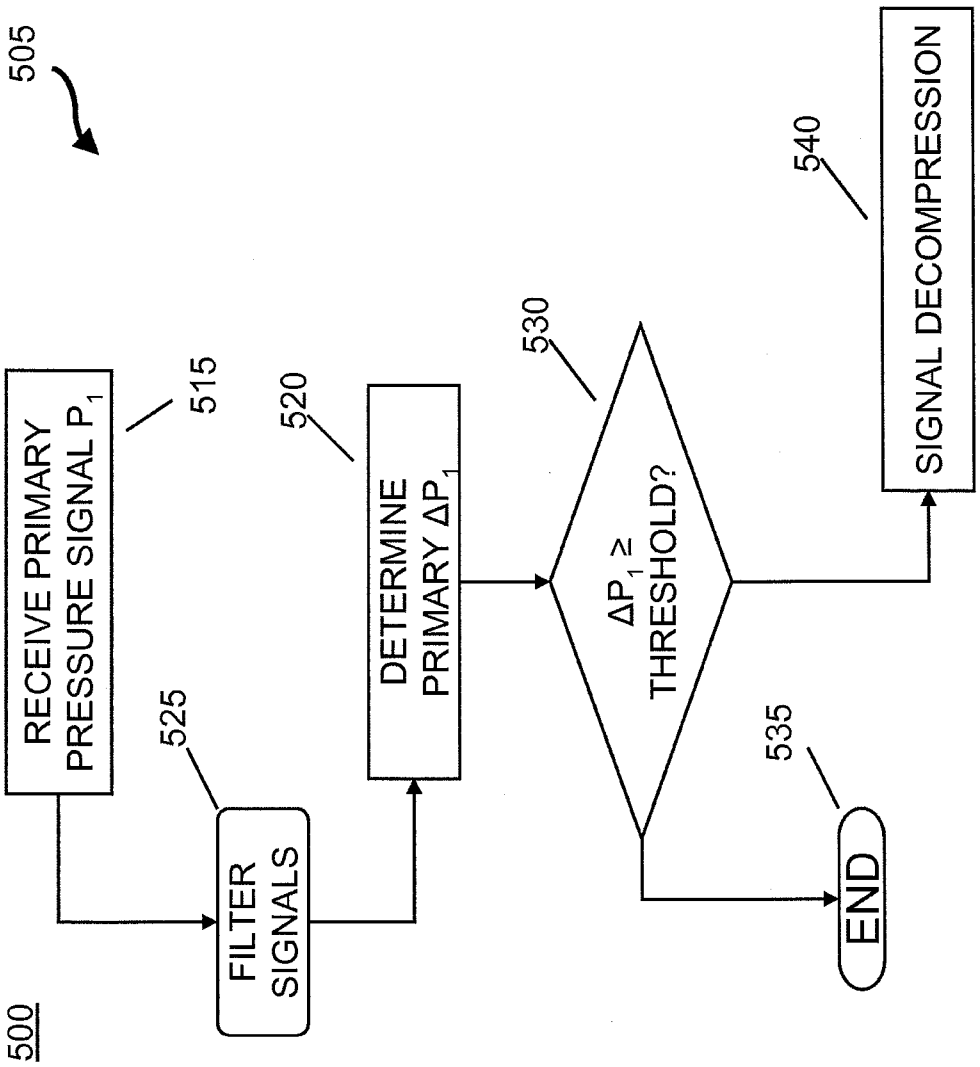
505
500
RECEIVE PRIMARY PRESSURE SIGNAL P_1
515
FILTER SIGNALS
525
DETERMINE PRIMARY ΔP_1
520
$\Delta P_1 \geq$ THRESHOLD?
530
SIGNAL DECOMPRESSION
540
END
535

FIG. 5A

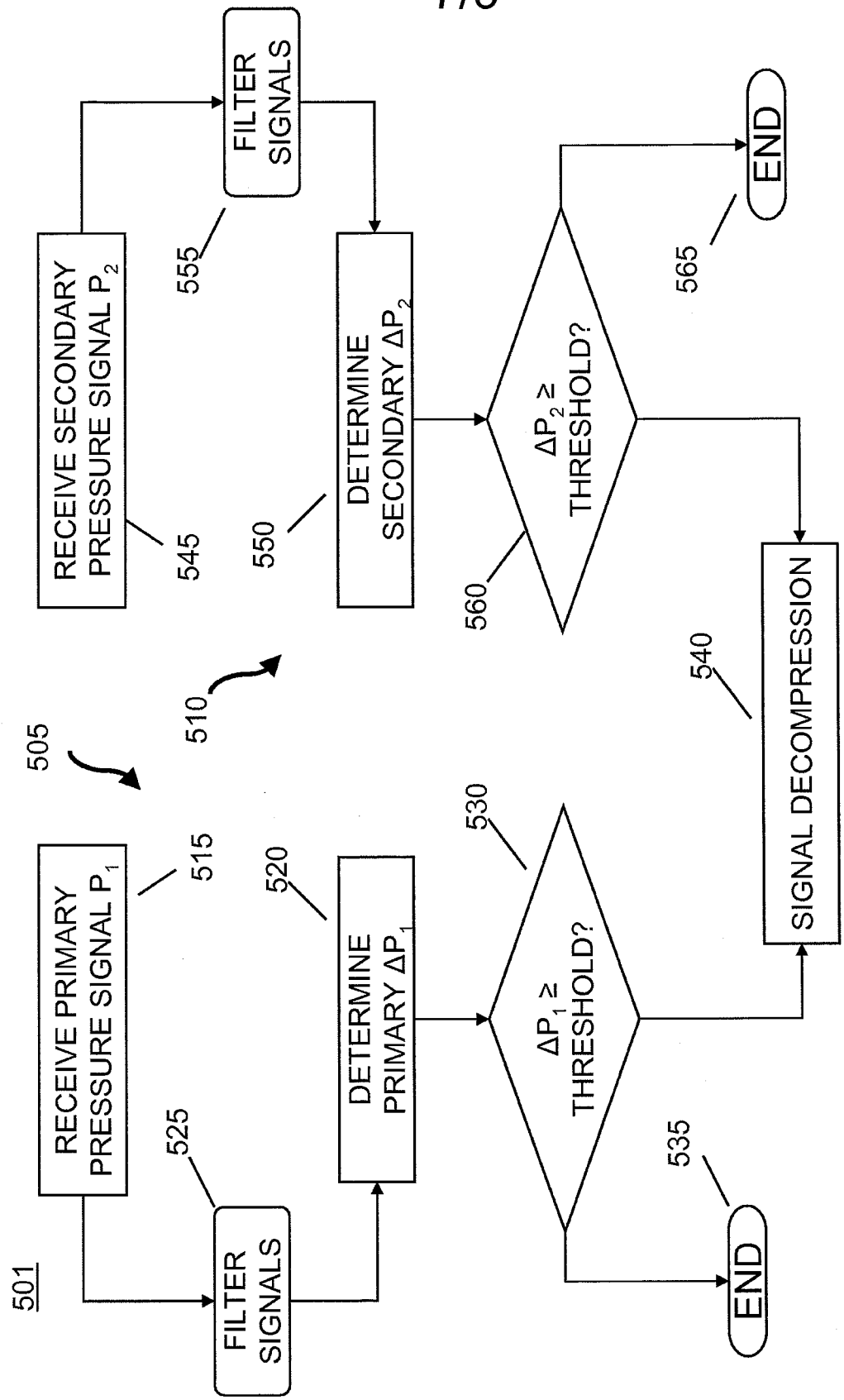
501
505
510
RECEIVE PRIMARY PRESSURE SIGNAL P_1
515
FILTER SIGNALS
525
DETERMINE PRIMARY ΔP_1
520
$\Delta P_1 \geq$ THRESHOLD?
530
END
535
RECEIVE SECONDARY PRESSURE SIGNAL P_2
545
FILTER SIGNALS
555
DETERMINE SECONDARY ΔP_2
550
$\Delta P_2 \geq$ THRESHOLD?
560
END
565
SIGNAL DECOMPRESSION
540

FIG. 5B

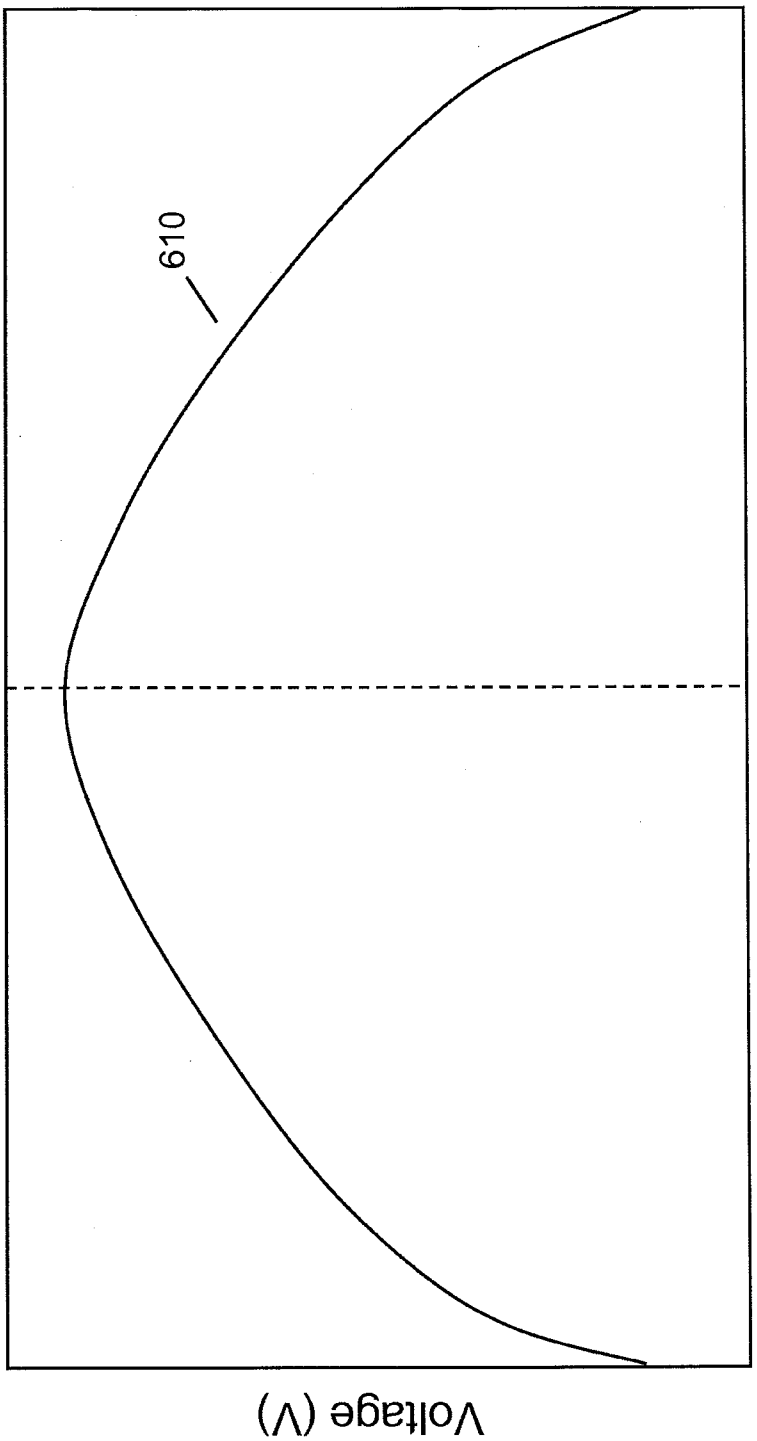

FIG. 6A

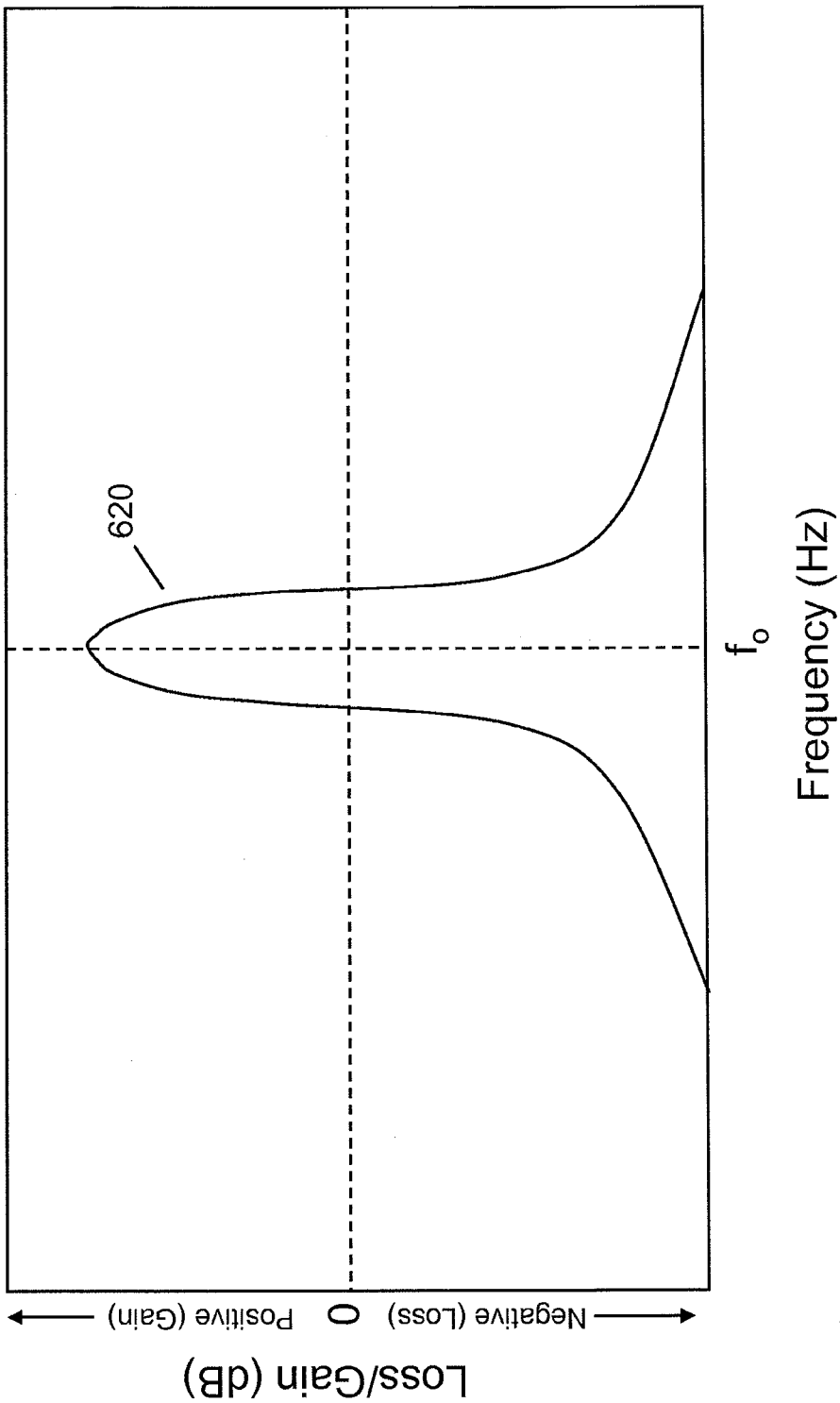
Loss/Gain (dB)
Negative (Loss)
0
Positive (Gain)
620
f_o
Frequency (Hz)

FIG. 6B