(12) INTERNATIONAL APPLICATION PUBLISHED UNDER THE PATENT COOPERATION TREATY (PCT)

(19) World Intellectual Property Organization
International Bureau

(43) International Publication Date
25 November 2004 (25.11.2004)

PCT

(10) International Publication Number
WO 2004/101015 A2

(51) International Patent Classification[7]: A61L 31/00

(21) International Application Number: PCT/US2004/014368

(22) International Filing Date: 7 May 2004 (07.05.2004)

(25) Filing Language: English

(26) Publication Language: English

(30) Priority Data:

60/468,770	7 May 2003 (07.05.2003)	US
60/480,057	20 June 2003 (20.06.2003)	US
60/503,553	16 September 2003 (16.09.2003)	US
60/529,065	12 December 2003 (12.12.2003)	US

(71) Applicant and
(72) Inventor *(for all designated States except US)*: **YEUNG, Jeffrey, E.** [US/US]; 834 North White Rd., San Jose, CA 95127-1024 (US).

(71) Applicant and
(72) Inventor *(for US only)*: **YEUNG, Teresa, T.** [US/US]; 834 North White Rd., San Jose, CA 95127-1024 (US).

(81) Designated States *(unless otherwise indicated, for every kind of national protection available)*: AE, AG, AL, AM, AT, AU, AZ, BA, BB, BG, BR, BW, BY, BZ, CA, CH, CN, CO, CR, CU, CZ, DE, DK, DM, DZ, EC, EE, EG, ES, FI, GB, GD, GE, GH, GM, HR, HU, ID, IL, IN, IS, JP, KE, KG, KP, KR, KZ, LC, LK, LR, LS, LT, LU, LV, MA, MD, MG, MK, MN, MW, MX, MZ, NA, NI, NO, NZ, OM, PG, PH, PL, PT, RO, RU, SC, SD, SE, SG, SK, SL, SY, TJ, TM, TN, TR, TT, TZ, UA, UG, US, UZ, VC, VN, YU, ZA, ZM, ZW.

(84) Designated States *(unless otherwise indicated, for every kind of regional protection available)*: ARIPO (BW, GH, GM, KE, LS, MW, MZ, NA, SD, SL, SZ, TZ, UG, ZM, ZW), Eurasian (AM, AZ, BY, KG, KZ, MD, RU, TJ, TM), European (AT, BE, BG, CH, CY, CZ, DE, DK, EE, ES, FI, FR, GB, GR, HU, IE, IT, LU, MC, NL, PL, PT, RO, SE, SI, SK, TR), OAPI (BF, BJ, CF, CG, CI, CM, GA, GN, GQ, GW, ML, MR, NE, SN, TD, TG).

Published:
— *without international search report and to be republished upon receipt of that report*

[Continued on next page]

(54) Title: TREATING BACK PAIN BY RE-ESTABLISHING THE EXCHANGE OF NUTRIENT & WASTE

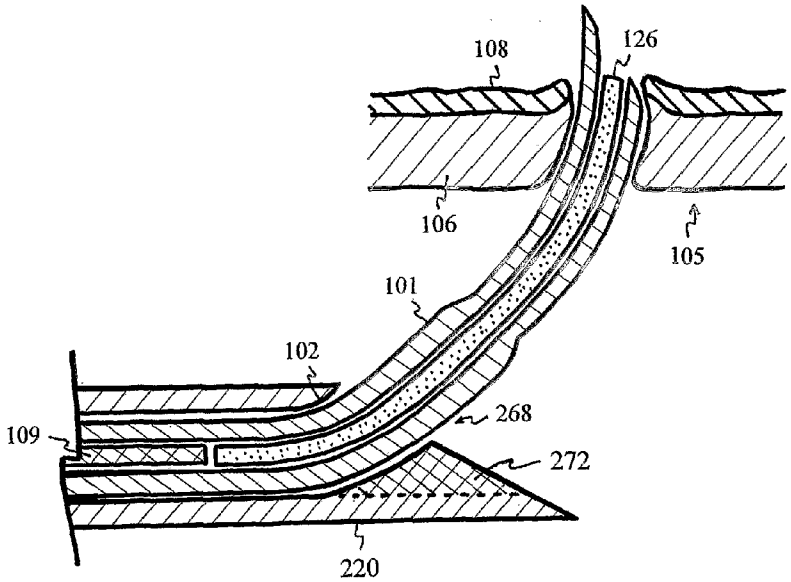

(57) Abstract: The intervertebral disc is avascular. With aging, endplates become occluded by calcified layers, and diffusion of nutrients and oxygen into the disc diminishes. The disc degenerates, and pain ensues. Conduits are delivered and deployed into the intervertebral disc to reestablish the exchange of nutrients and waste between the disc and bodily circulation to stop or reverse disc degeneration and relieve pain. The intervertebral disc installed with semi-permeable conduits may be used as an immuno-isolated capsule to encapsulate donor cells capable of biosynthesizing therapeutic molecules. The semi-permeable conduits establish the exchange of nutrients and therapeutic molecules between disc and bodily circulation to treat a disease without using immunosuppressive drugs.

WO 2004/101015 A2

For two-letter codes and other abbreviations, refer to the "Guidance Notes on Codes and Abbreviations" appearing at the beginning of each regular issue of the PCT Gazette.