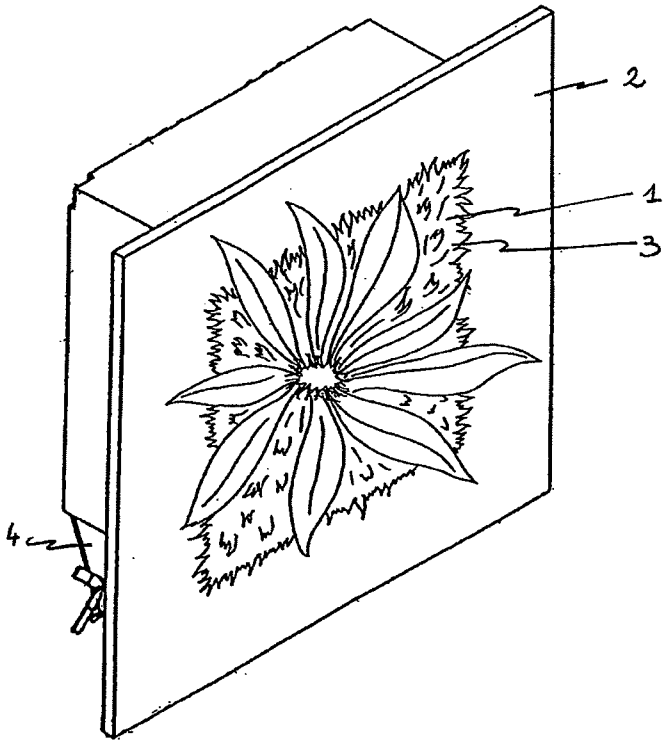

Fig1

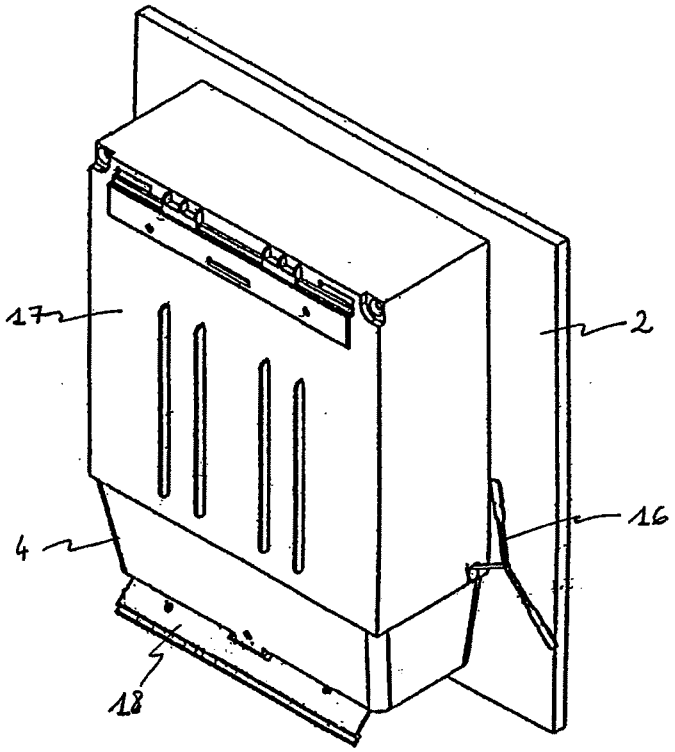

Fig2

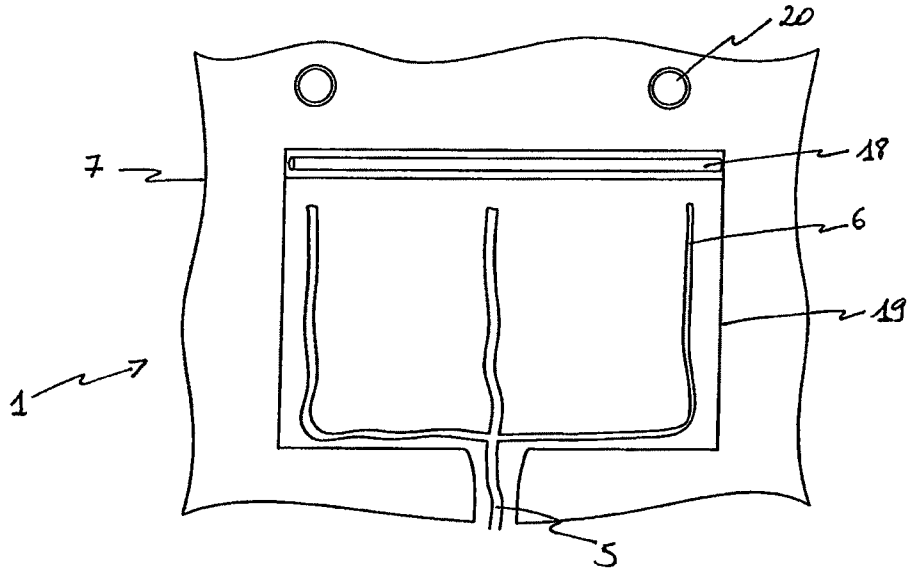

Fig3

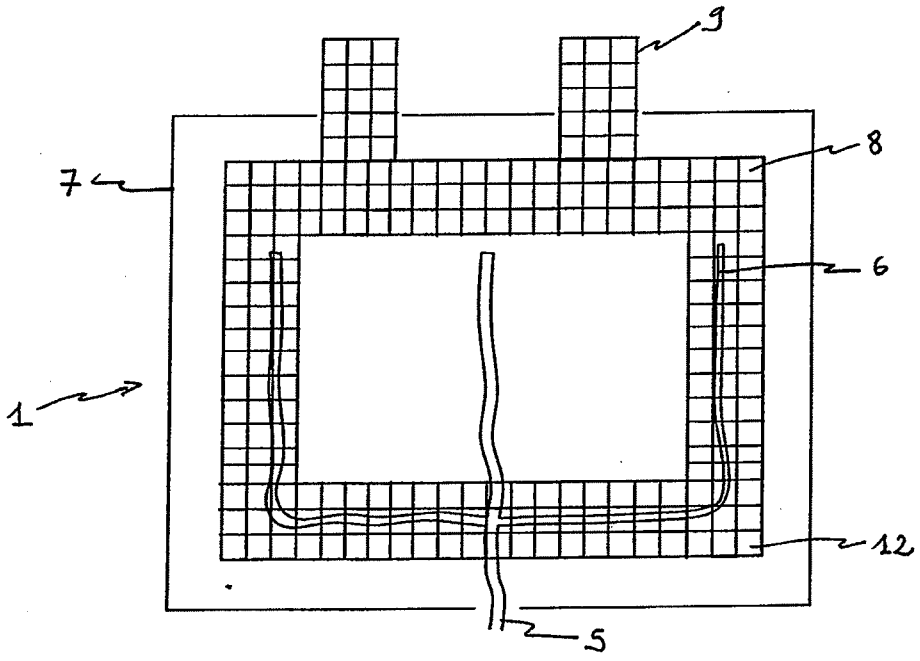

Fig4

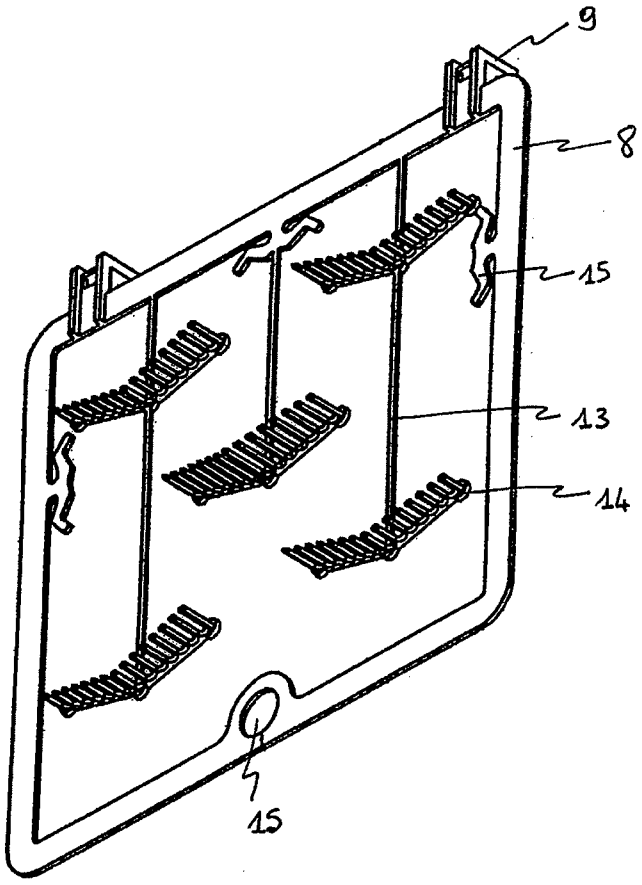

Fig5