(12) INTERNATIONAL APPLICATION PUBLISHED UNDER THE PATENT COOPERATION TREATY (PCT)

(19) World Intellectual Property Organization
International Bureau

(43) International Publication Date
28 June 2001 (28.06.2001)

PCT

(10) International Publication Number
WO 01/45634 A1

(51) International Patent Classification[7]: A61J 1/03, A61M 15/00

(21) International Application Number: PCT/SE00/02649

(22) International Filing Date:
21 December 2000 (21.12.2000)

(25) Filing Language: English

(26) Publication Language: English

(30) Priority Data:
9904706-0 21 December 1999 (21.12.1999) SE

(71) Applicant *(for all designated States except US)*: **ASTRAZENECA AB** [SE/SE]; S-151 85 Södertälje (SE).

(72) Inventors; and

(75) Inventors/Applicants *(for US only)*: **EKELIUS, Carina** [SE/SE]; Snickarevägen 22, S-235 92 Vellinge (SE). **OHLSSON, Per-Åke** [SE/SE]; AstraZeneca R & D Lund, S-221 87 Lund (SE). **SELMER, Anders** [SE/SE]; Svaneholm 2, S-274 91 Skurup (SE).

(74) Agent: **GLOBAL INTELLECTUAL PROPERTY**; AstraZeneca AB, S-151 85 Södertälje (SE).

(81) Designated States *(national)*: AE, AG, AL, AM, AT, AU, AZ, BA, BB, BG, BR, BY, BZ, CA, CH, CN, CR, CU, CZ, DE, DK, DM, DZ, EE, ES, FI, GB, GD, GE, GH, GM, HR, HU, ID, IL, IN, IS, JP, KE, KG, KP, KR, KZ, LC, LK, LR, LS, LT, LU, LV, MA, MD, MG, MK, MN, MW, MX, MZ, NO, NZ, PL, PT, RO, RU, SD, SE, SG, SI, SK, SL, TJ, TM, TR, TT, TZ, UA, UG, US, UZ, VN, YU, ZA, ZW.

(84) Designated States *(regional)*: ARIPO patent (GH, GM, KE, LS, MW, MZ, SD, SL, SZ, TZ, UG, ZW), Eurasian patent (AM, AZ, BY, KG, KZ, MD, RU, TJ, TM), European patent (AT, BE, CH, CY, DE, DK, ES, FI, FR, GB, GR, IE, IT, LU, MC, NL, PT, SE, TR), OAPI patent (BF, BJ, CF, CG, CI, CM, GA, GN, GW, ML, MR, NE, SN, TD, TG).

Published:
— *With international search report.*

[Continued on next page]

(54) Title: AN INHALATION DEVICE

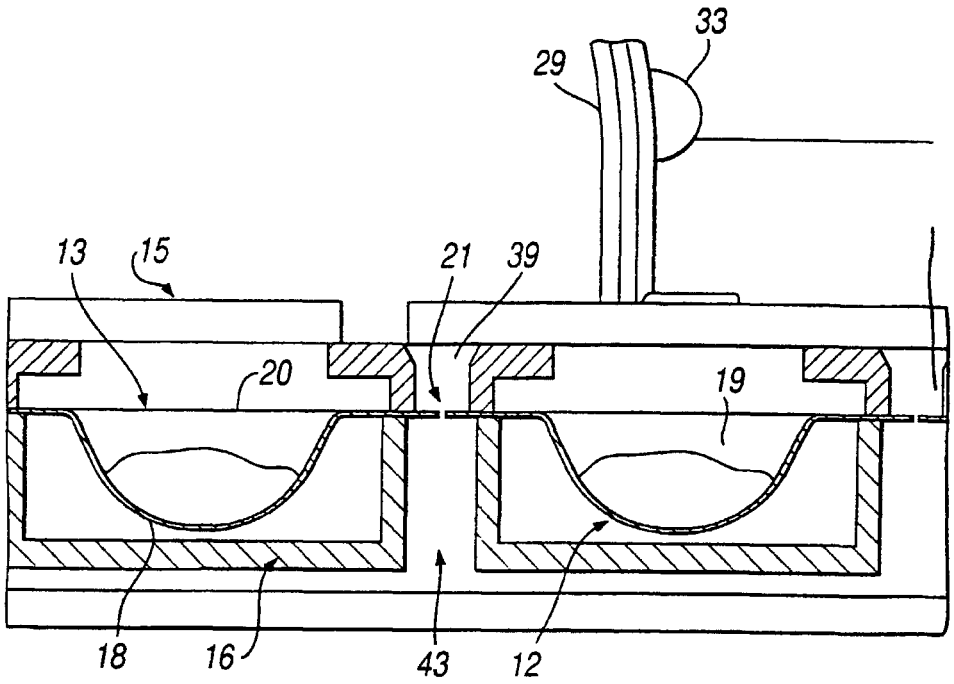

(57) Abstract: The present invention relates to a blister pack (12) having a plurality of blisters (13) each holding a dose of a powdered medicament comprising a lower base (18) containing a plurality of cavities (19) for the powdered medicament and an upper sealing foil layer (20) which covers the lower base (18) to form the blisters (13). Each cavity (19) is provided with at least one adjacent slit (21) formed by scoring the foil layer (20) and a lower base (18). The slit (21) ensuring accurate penetration of a cavity (19) by a suction tube through which a user can inhale the contents of the cavity (19).

WO 01/45634 A1

For two-letter codes and other abbreviations, refer to the "Guidance Notes on Codes and Abbreviations" appearing at the beginning of each regular issue of the PCT Gazette.