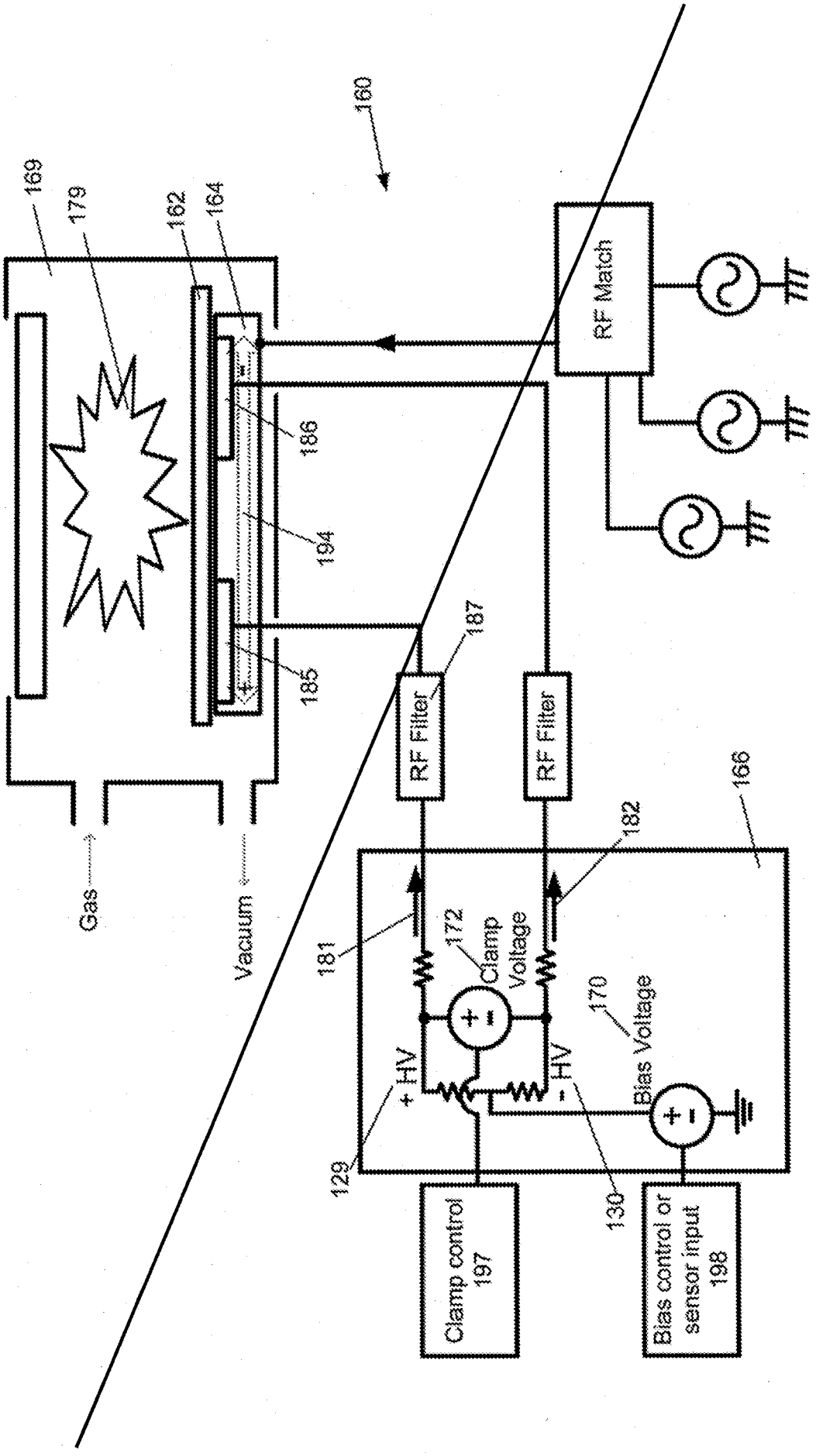

Fig. 1A (Prior Art)

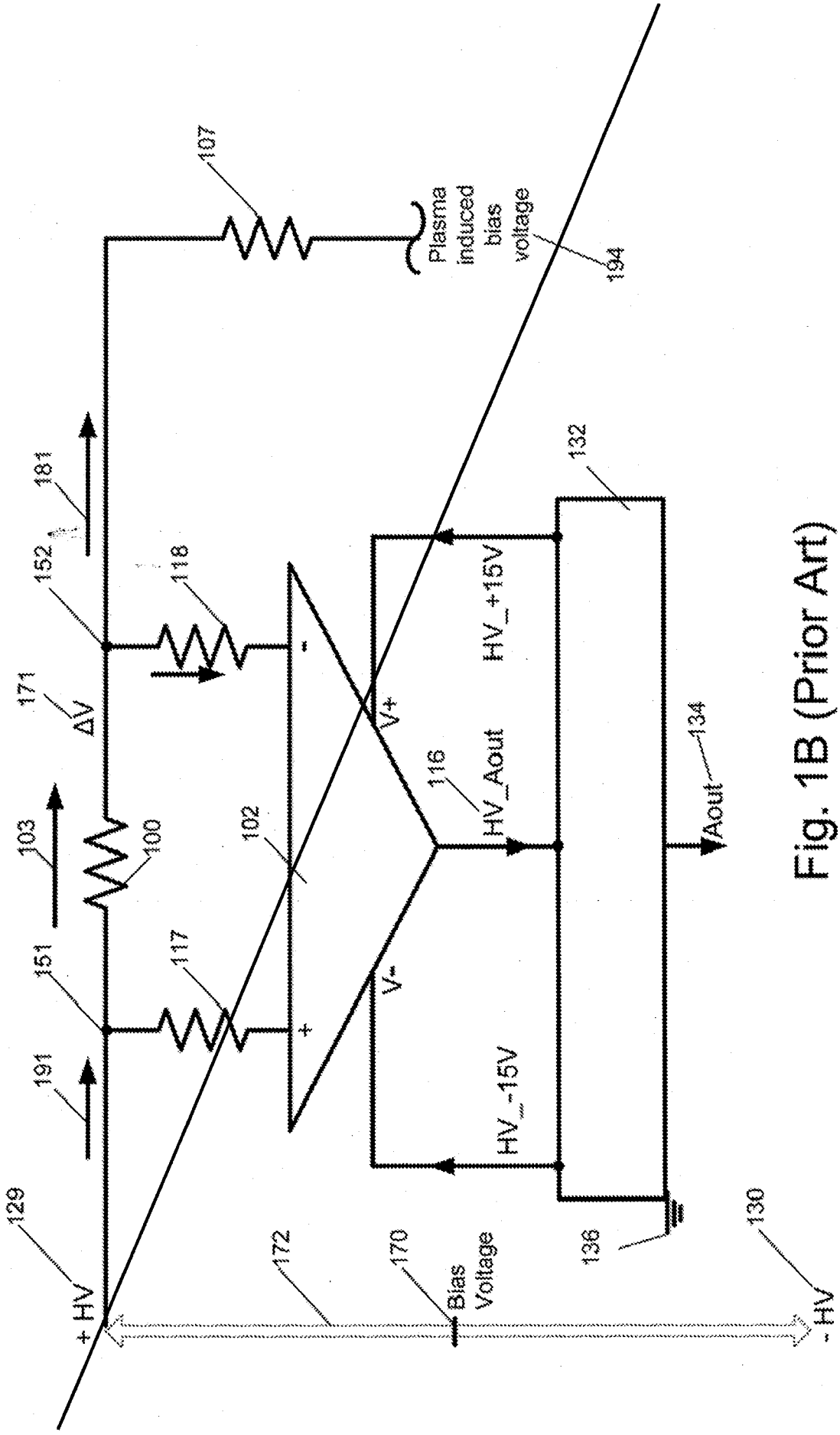

Fig. 1B (Prior Art)

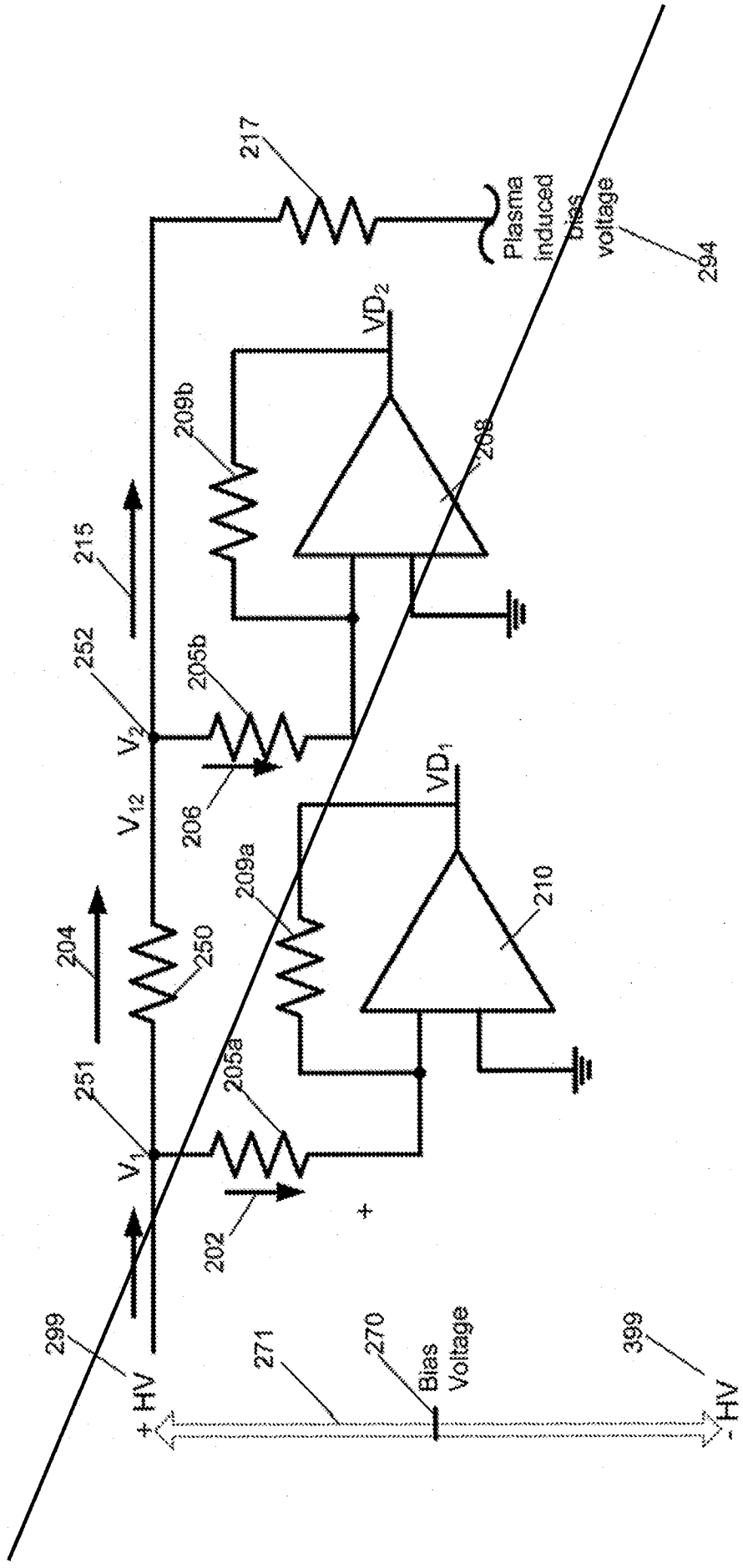
217
Plasma induced bias voltage
294
VD2
209b
208
215
252
205b
V2
V12
206
VD1
209a
210
204
250
251
205a
V1
202
+
299
+ HV
271
270
Bias Voltage
399
-HV

Fig. 2A

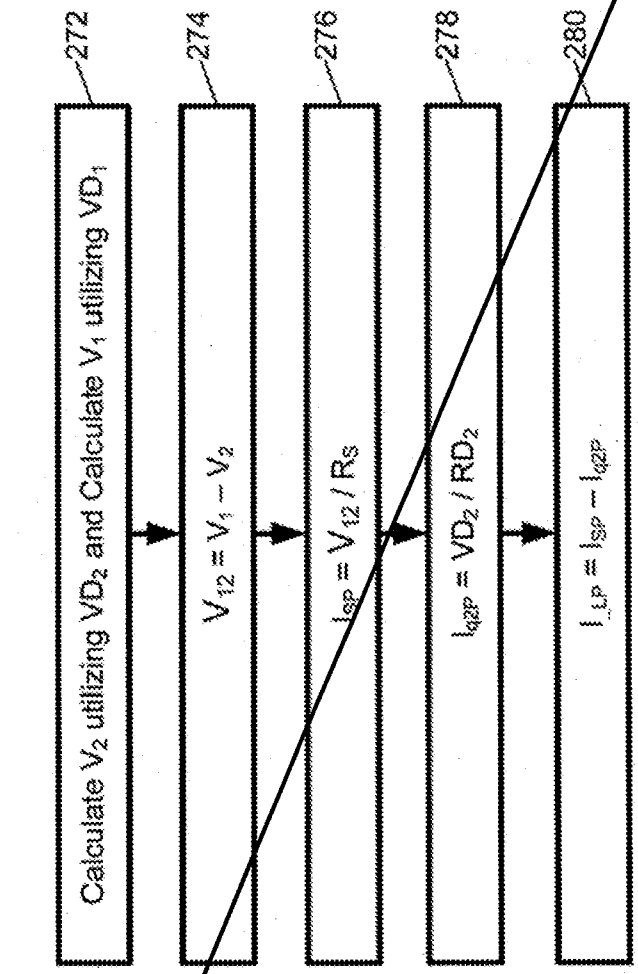
272
Calculate V_2 utilizing VD_2 and Calculate V_1 utilizing VD_1
274
$V_{12} = V_1 - V_2$
276
$I_{SP} = V_{12} / R_S$
278
$I_{Q2P} = VD_2 / RD_2$
280
$I_{LP} = I_{SP} - I_{Q2P}$

Fig. 2B

$$V_{ISP} = (VD_1 - VD_2) * (-X) \quad \ldots\ldots\ldots\

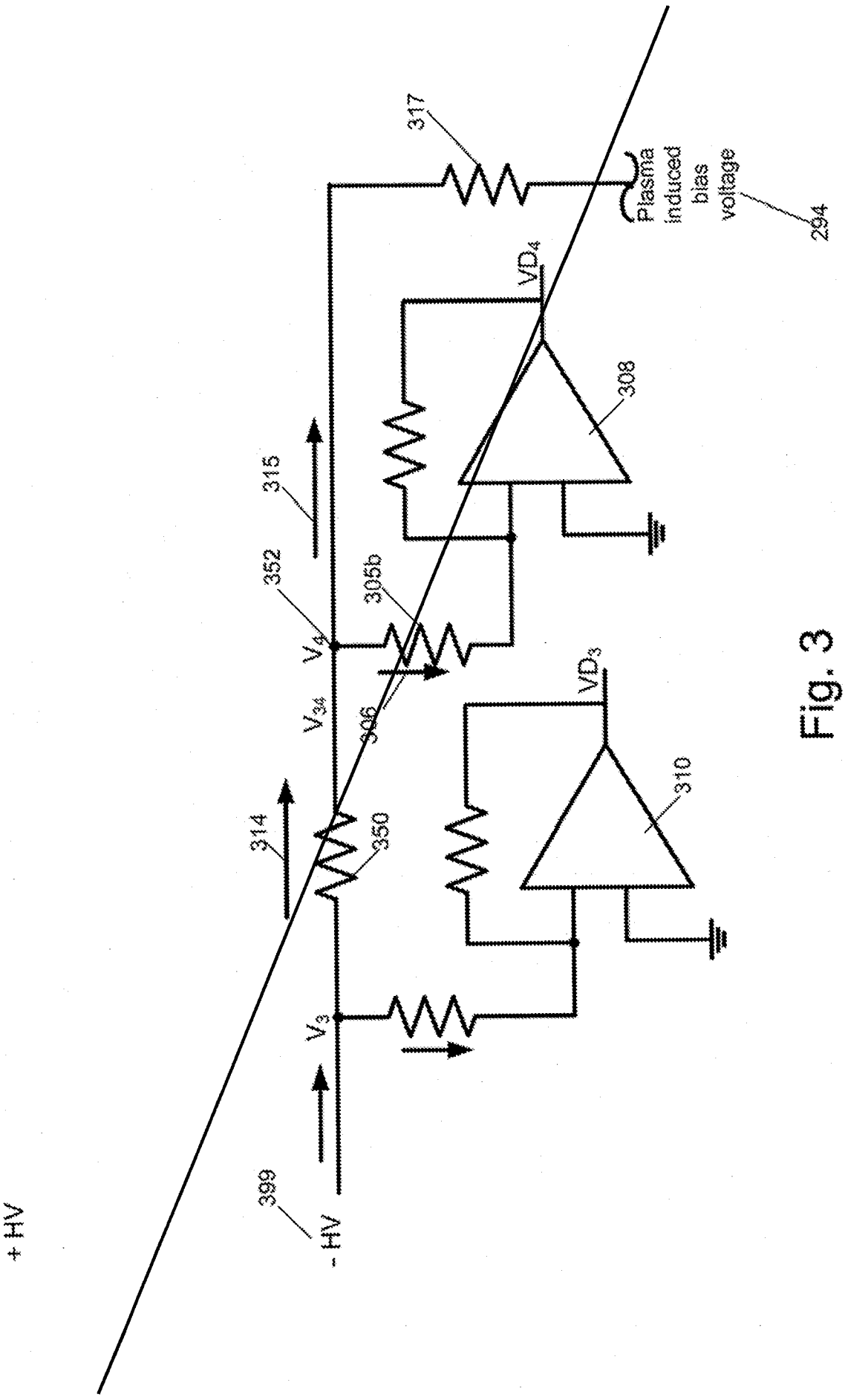
317
Plasma induced bias voltage
294
VD_4
308
315
352
305b
V_4
V_{34}
306
VD_3
310
314
350
V_3
399
- HV
+ HV

Fig. 3

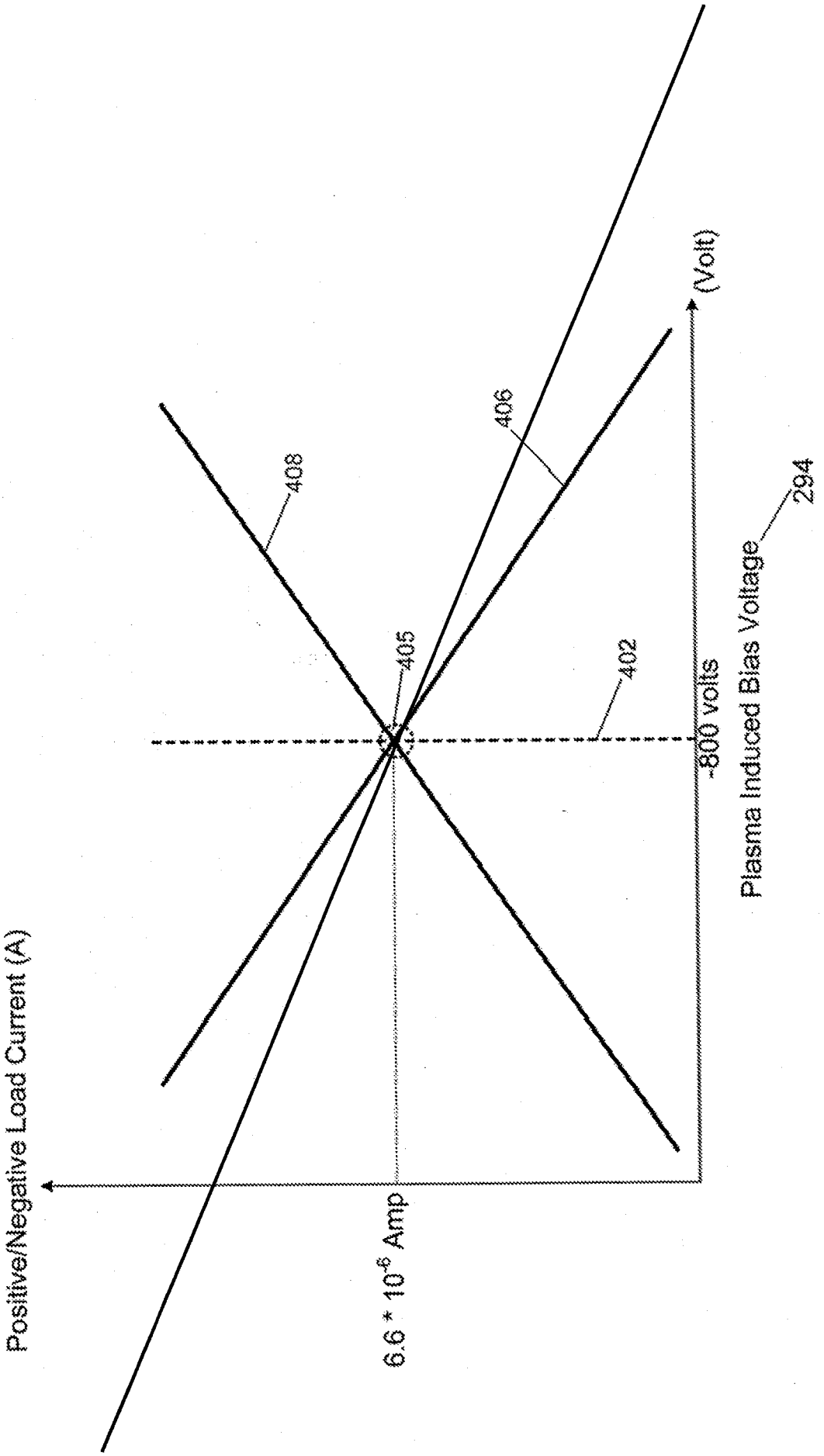
Positive/Negative Load Current (A)
6.6 * 10^-6 Amp
Plasma Induced Bias Voltage (Volt)
-800 volts
294
402
405
406
408

Fig. 4

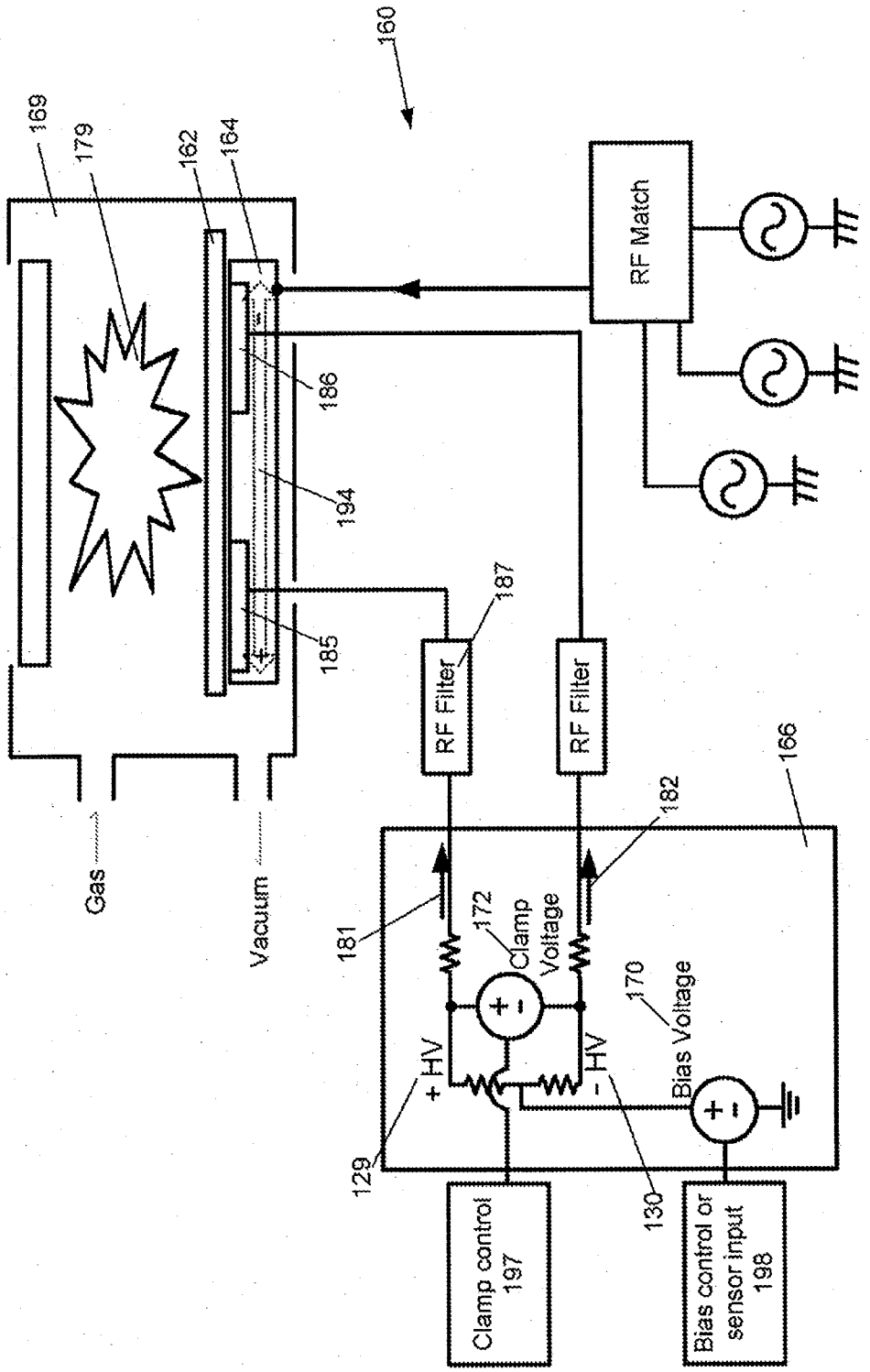

Fig. 1A (Prior Art)

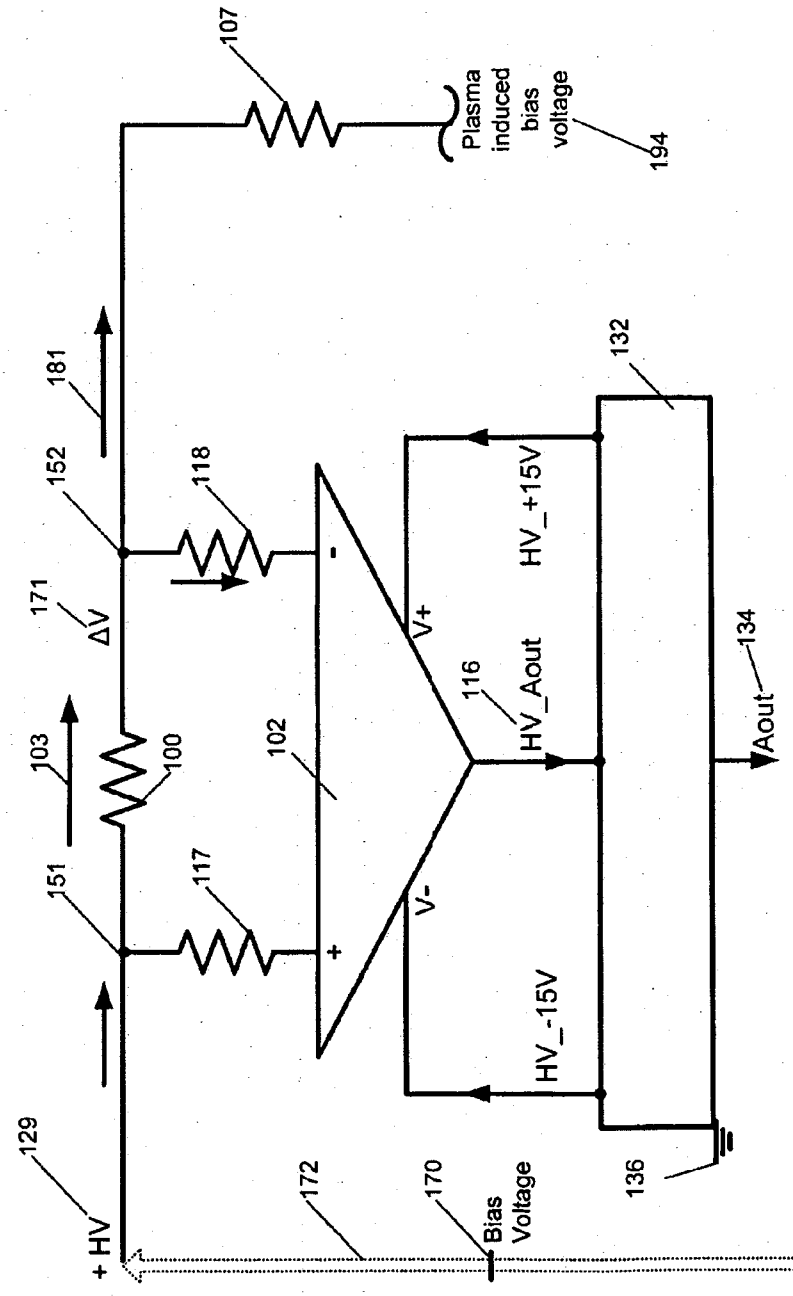

Fig. 1B (Prior Art)

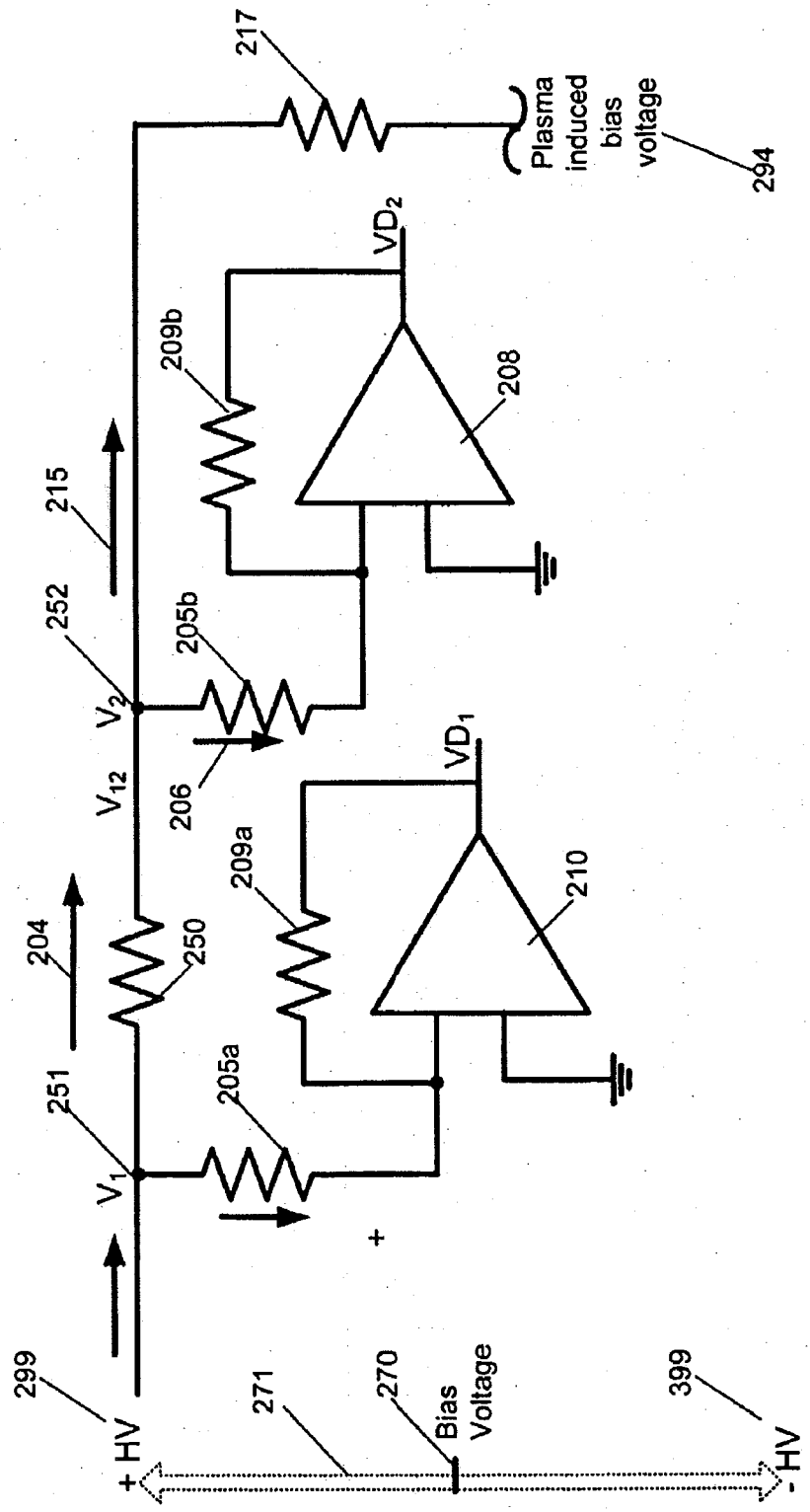
217
Plasma induced bias voltage
294
VD2
209b
208
215
252
205b
V2
206
V12
VD1
209a
210
204
250
251
205a
V1
+
299
+ HV
271
270
Bias Voltage
399
- HV

Fig. 2A

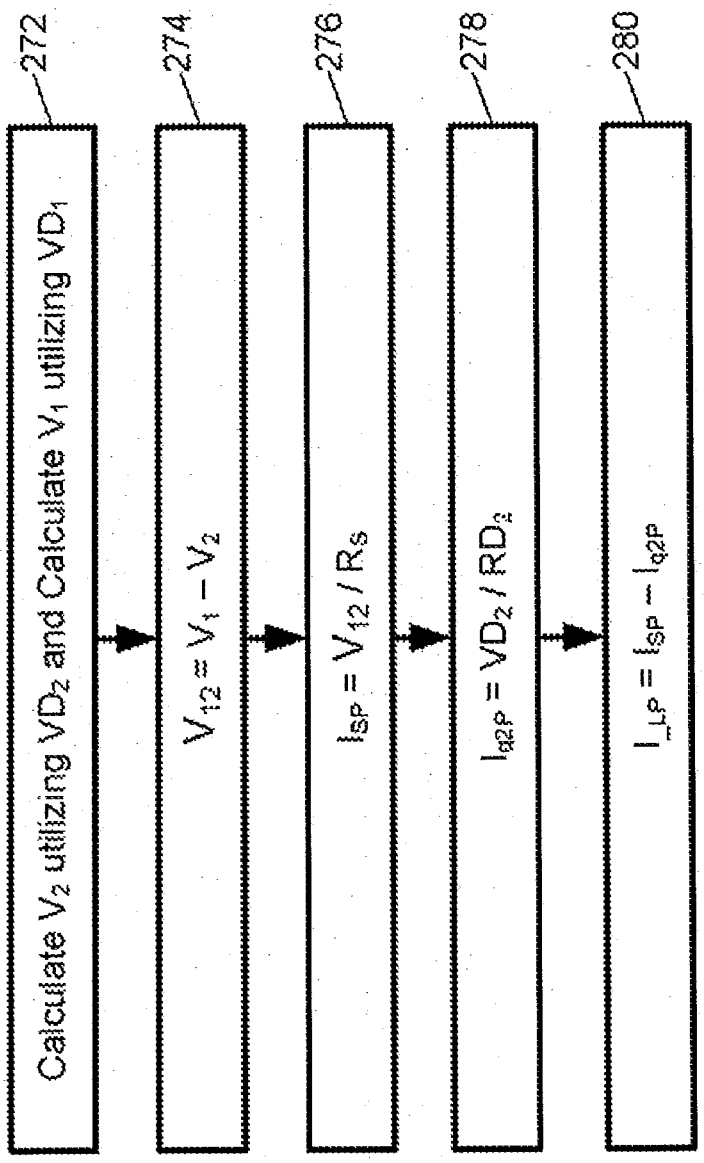
272
Calculate V_2 utilizing VD_2 and Calculate V_1 utilizing VD_1
274
$V_{12} \cong V_1 - V_2$
276
$I_{SP} = V_{12} / R_S$
278
$I_{q2P} = VD_2 / RD_2$
280
$I_{\_LP} = I_{SP} - I_{q2P}$

Fig. 2B

$$V_{ISP} = (VD_1 - VD_2) * (-X) \quad \text{.....(241)}$$

$$\Delta V = (Y) * (V_{ISP}) + (VD_2) * (R_S / RD_2) \quad \text{.....(242)}$$

$$I_{LP} = (\Delta V) / (R_S) \quad \text{.....(243)}$$

Fig. 2C

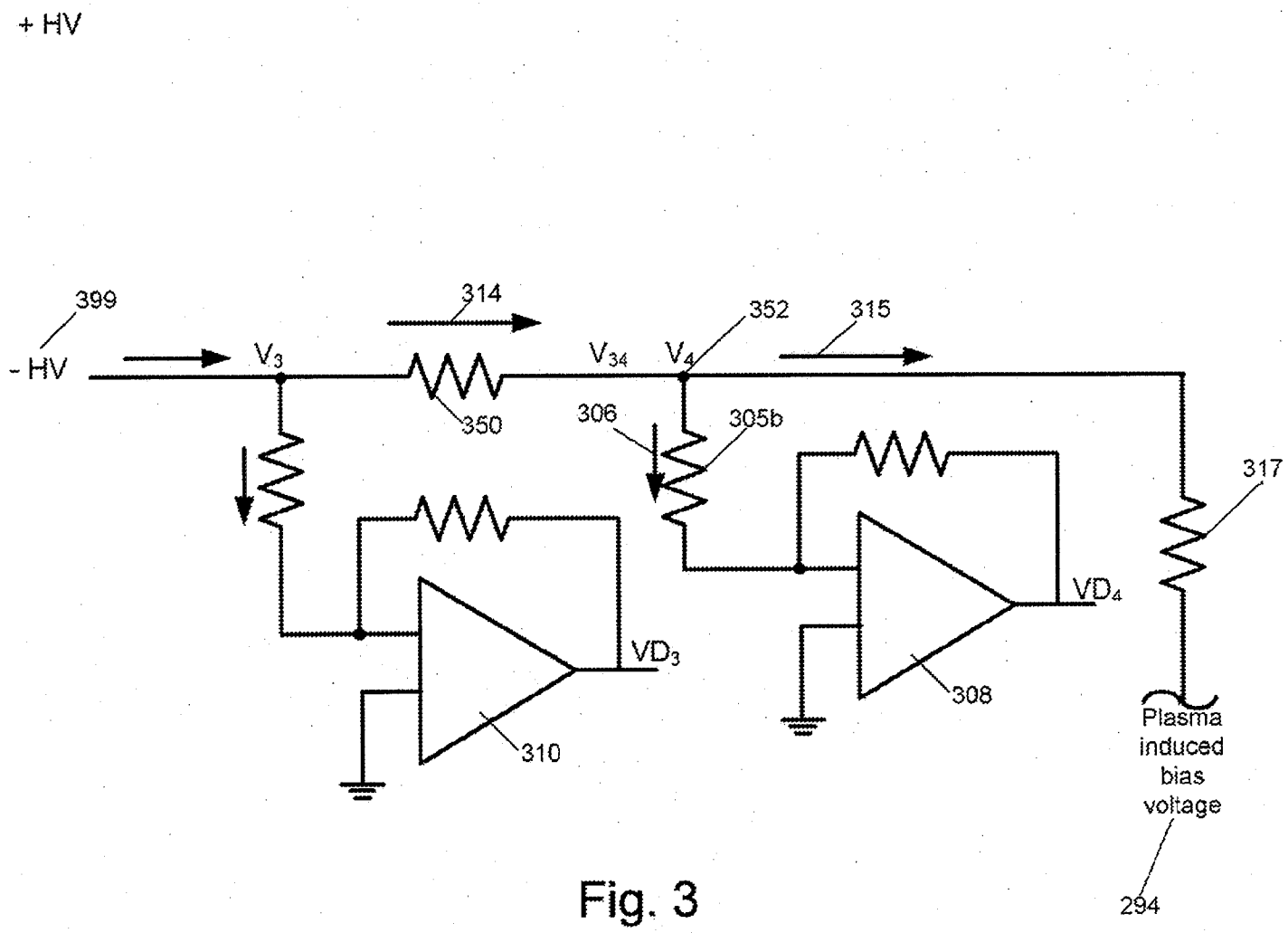
+ HV
- HV
399
314
352
315
V_3
V_{34}
V_4
350
306
305b
317
VD_3
VD_4
310
308
Plasma induced bias voltage
294

Fig. 3

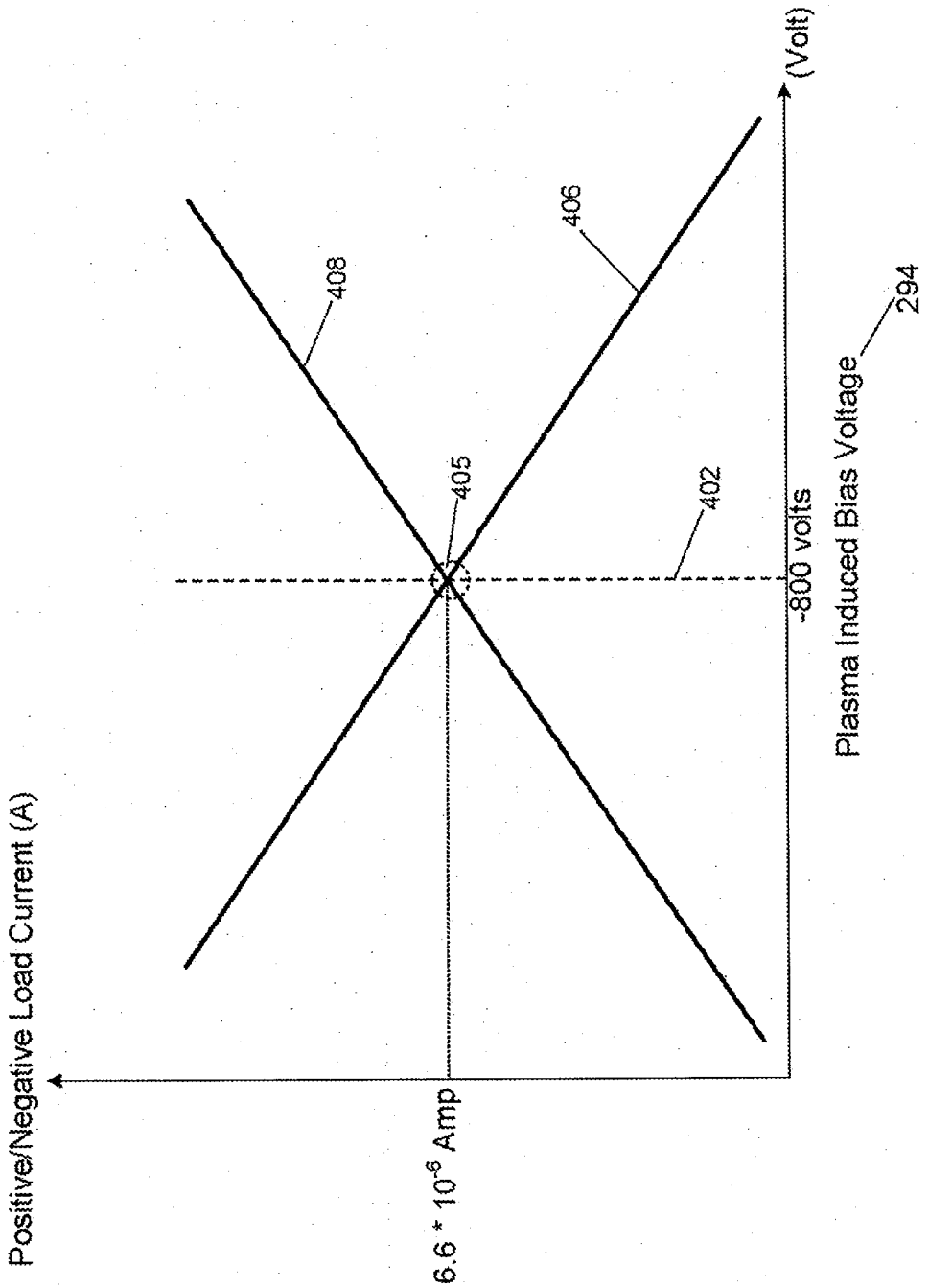
Positive/Negative Load Current (A)
6.6 * 10-6 Amp
-800 volts
Plasma Induced Bias Voltage (Volt)
294
408
406
405
402

Fig. 4