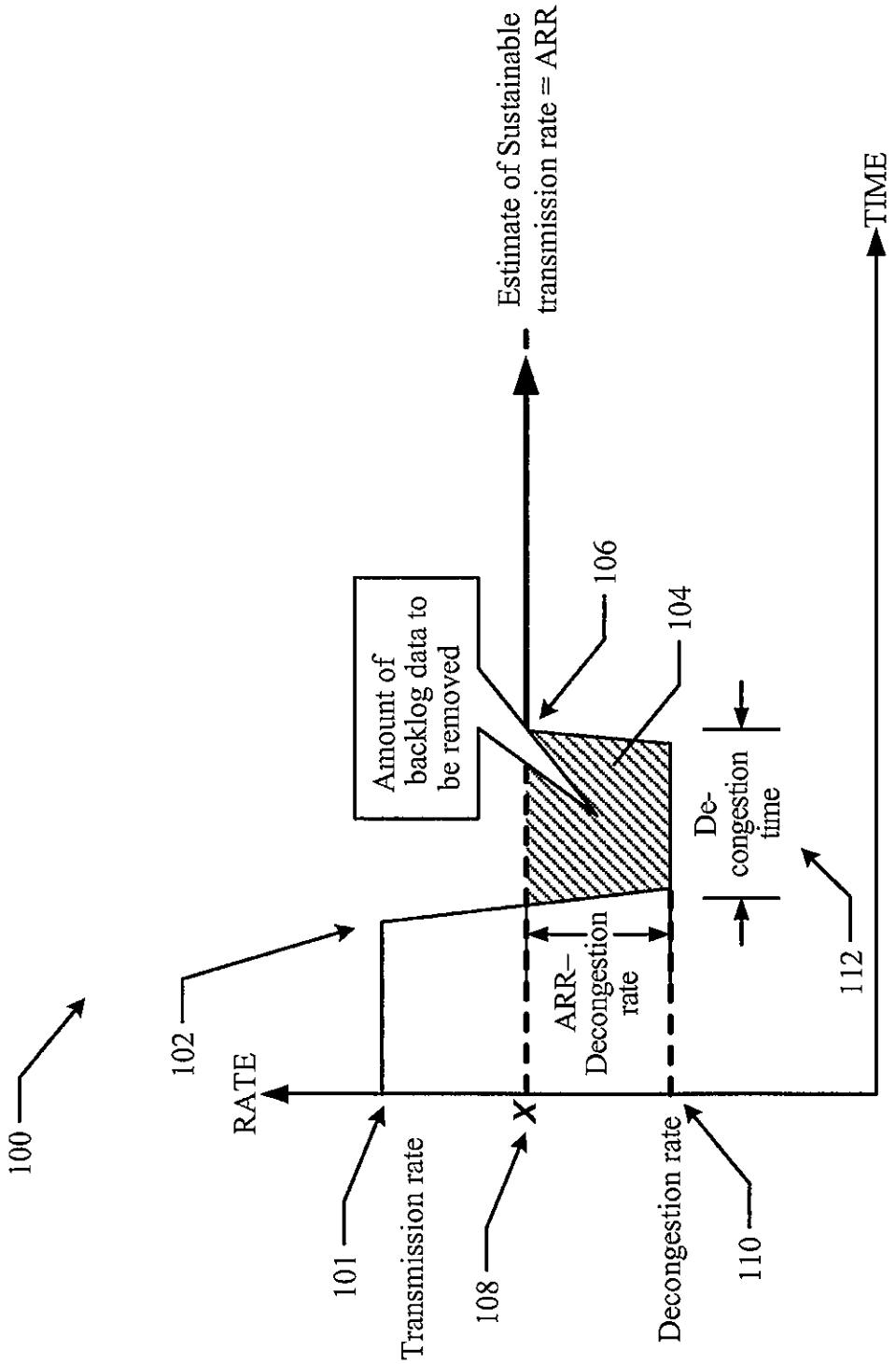
100
102
RATE
101
Transmission rate
108
Decongestion rate
110
112
TIME
Estimate of Sustainable transmission rate ≈ ARR
106
104
Amount of backlog data to be removed
ARR–Decongestion rate
De-congestion time

FIG. 1

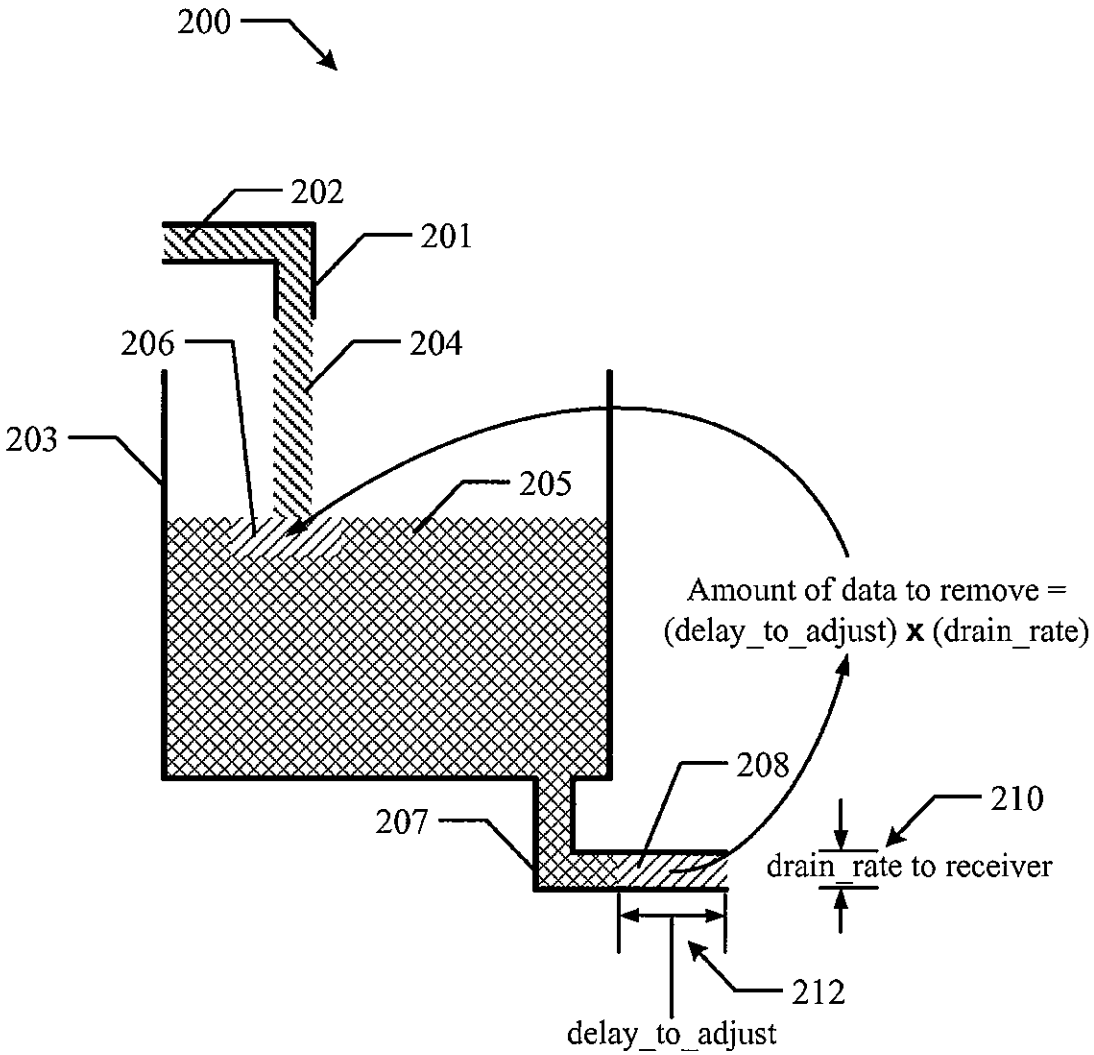
200
202
201
206
204
203
205
Amount of data to remove =
(delay_to_adjust) x (drain_rate)
208
210
207
drain_rate to receiver
212
delay_to_adjust

FIG. 2

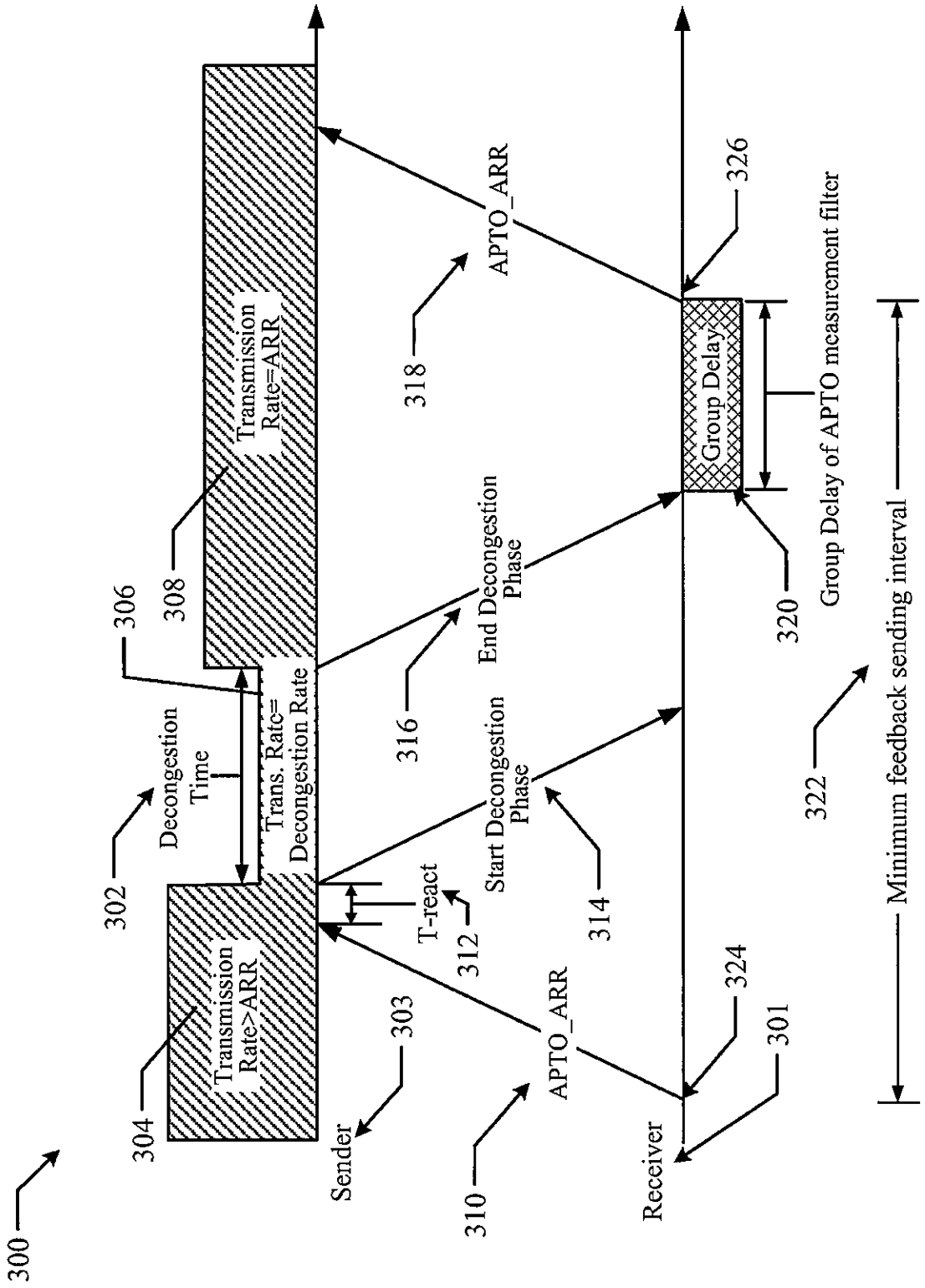
300
304
Transmission Rate>ARR
302
Decongestion Time
306
308
Transmission Rate=ARR
Trans. Rate= Decongestion Rate
Sender
303
T-react
312
Start Decongestion Phase
314
316
End Decongestion Phase
318
APTO_ARR
310
APTO_ARR
Receiver
324
301
326
Group Delay
320
Group Delay of APTO measurement filter
322
Minimum feedback sending interval

FIG. 3

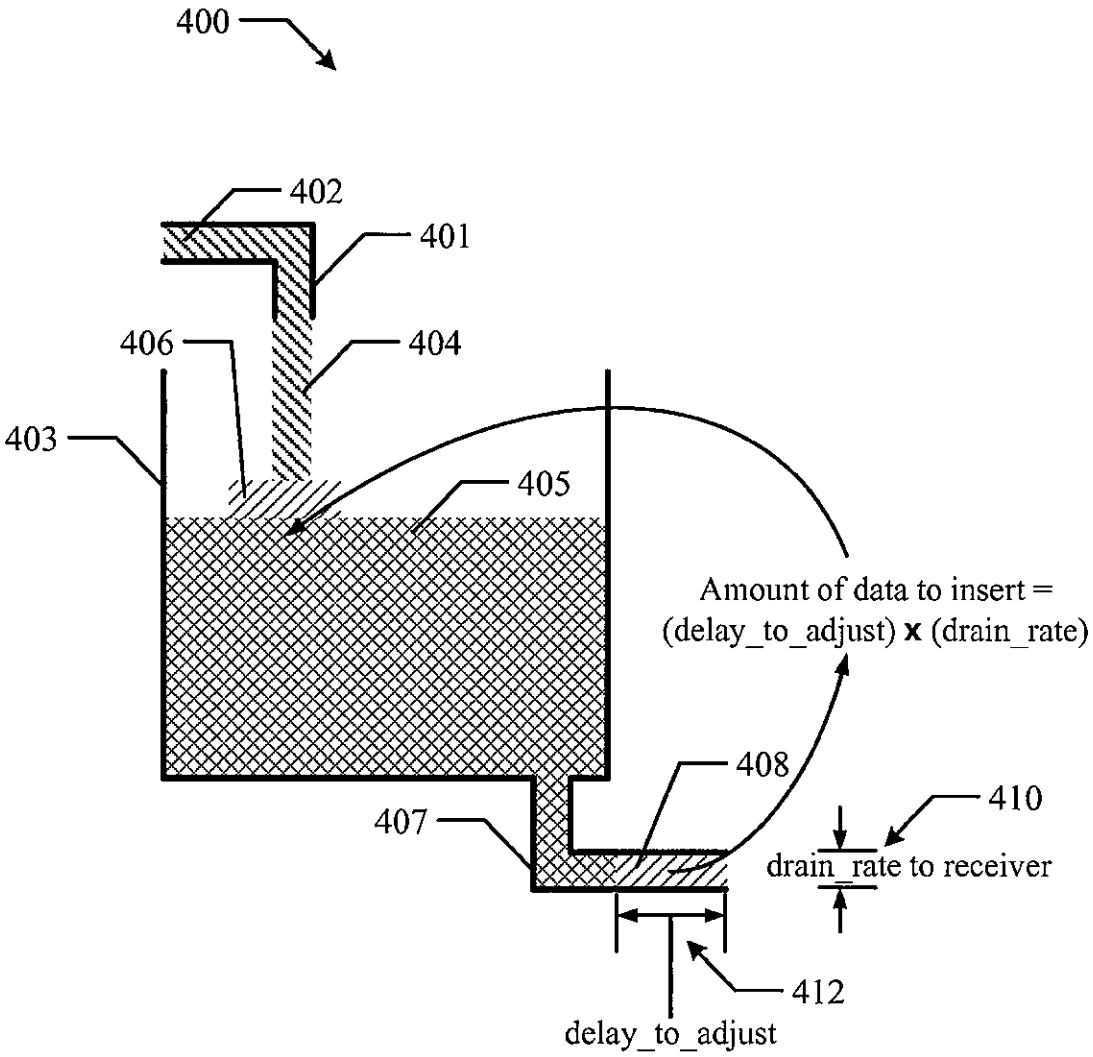
400
402
401
406
404
403
405
Amount of data to insert =
(delay_to_adjust) x (drain_rate)
408
410
407
drain_rate to receiver
412
delay_to_adjust

FIG. 4

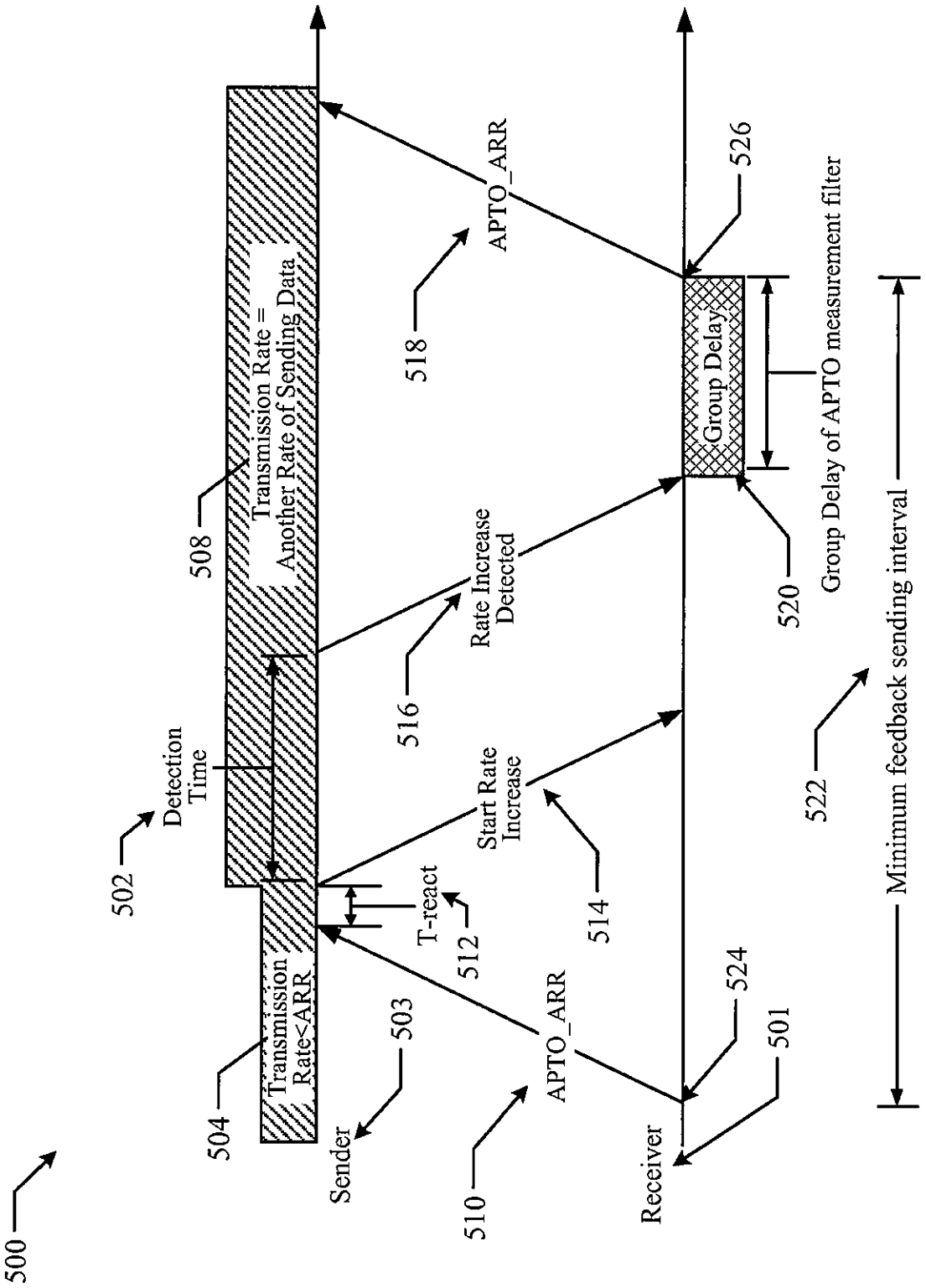
500
Sender
Receiver
501
502
503
504
Transmission Rate<ARR
Detection Time
T-react
512
510
APTO_ARR
514
Start Rate Increase
516
Rate Increase Detected
518
APTO_ARR
508
Transmission Rate = Another Rate of Sending Data
520
Group Delay
526
Group Delay of APTO measurement filter
522
Minimum feedback sending interval
524

FIG. 5

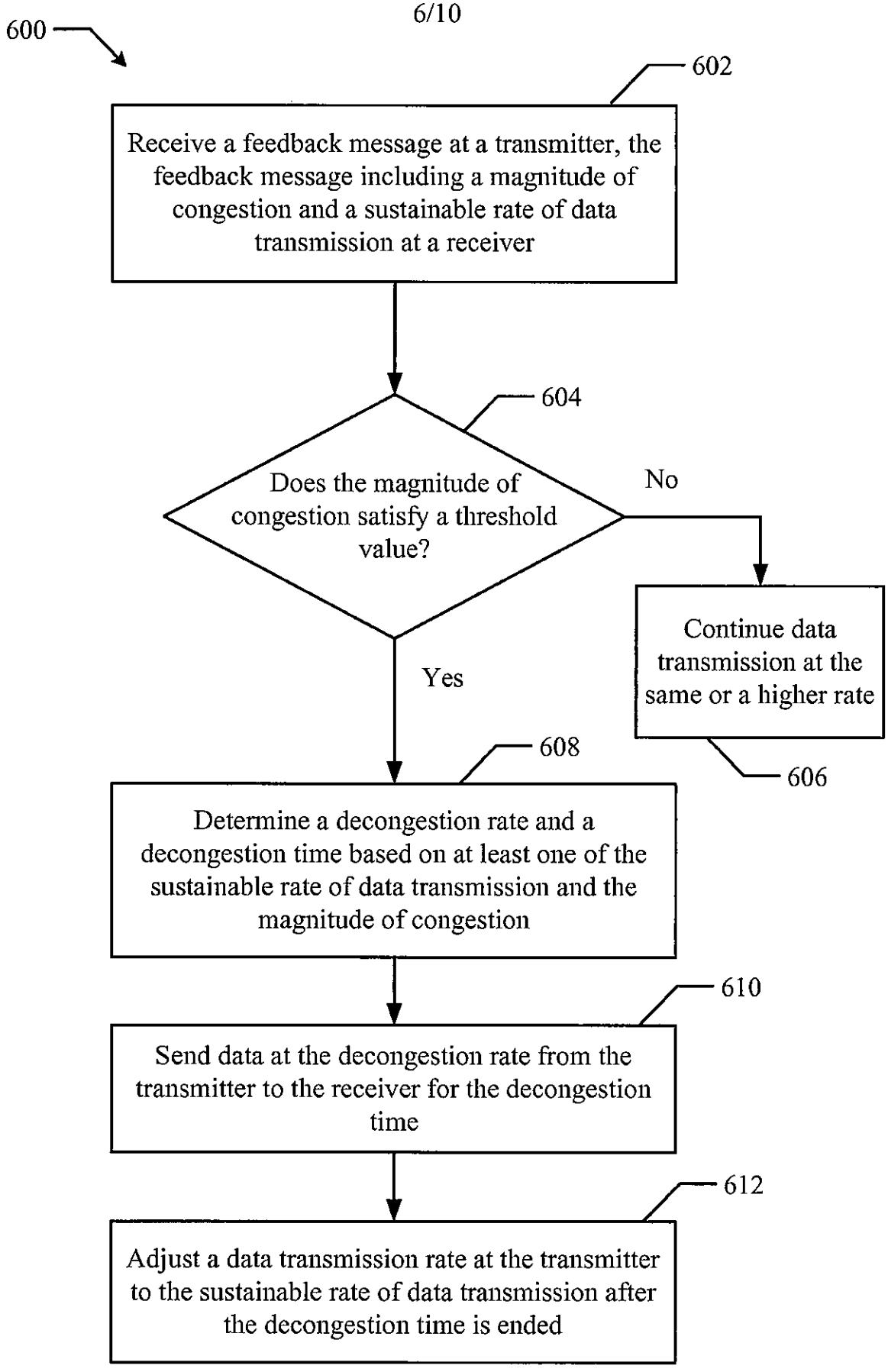
600
602
Receive a feedback message at a transmitter, the feedback message including a magnitude of congestion and a sustainable rate of data transmission at a receiver
604
Does the magnitude of congestion satisfy a threshold value?
No
Continue data transmission at the same or a higher rate
606
Yes
608
Determine a decongestion rate and a decongestion time based on at least one of the sustainable rate of data transmission and the magnitude of congestion
610
Send data at the decongestion rate from the transmitter to the receiver for the decongestion time
612
Adjust a data transmission rate at the transmitter to the sustainable rate of data transmission after the decongestion time is ended

FIG. 6

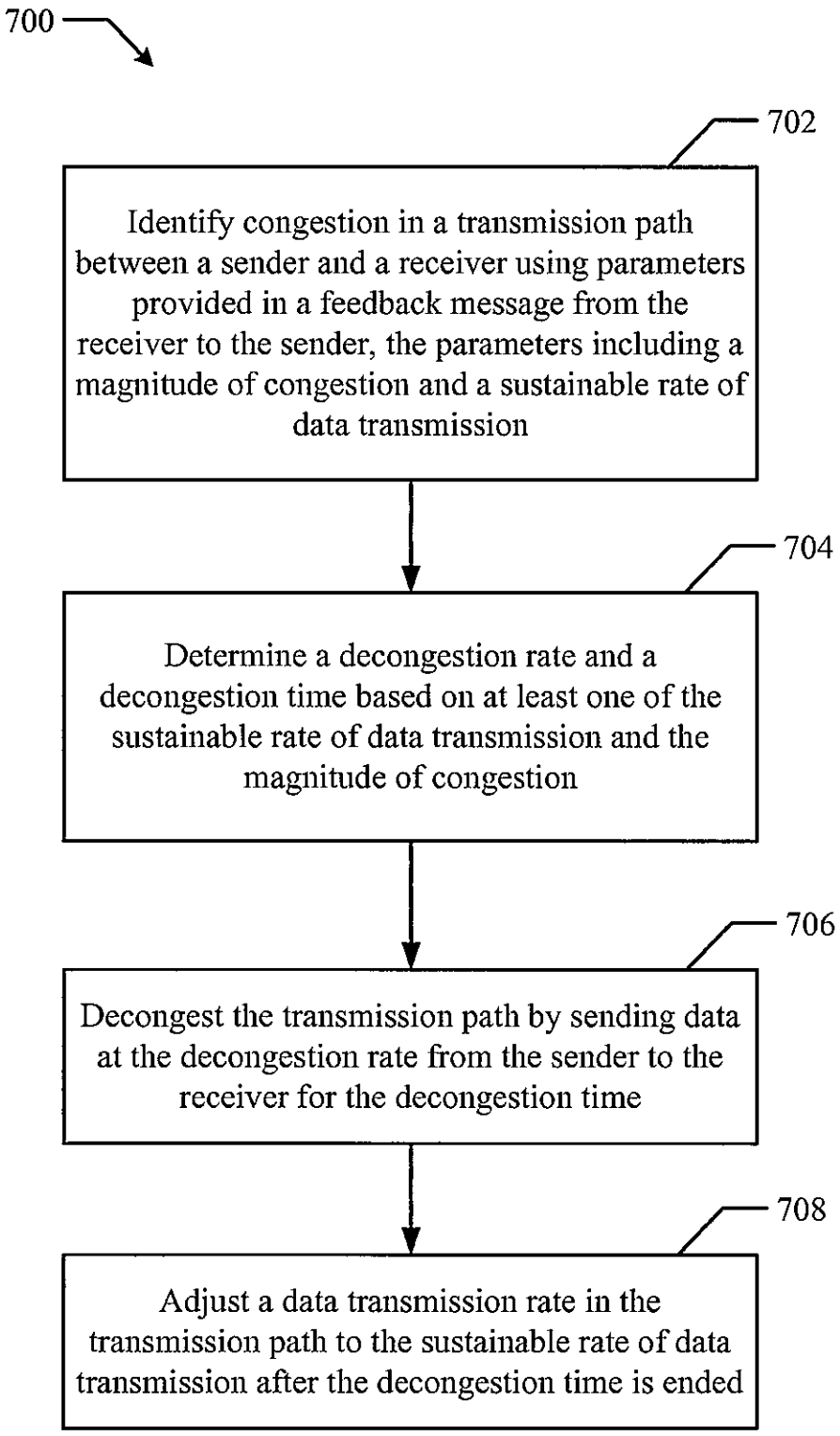
700
702
Identify congestion in a transmission path between a sender and a receiver using parameters provided in a feedback message from the receiver to the sender, the parameters including a magnitude of congestion and a sustainable rate of data transmission
704
Determine a decongestion rate and a decongestion time based on at least one of the sustainable rate of data transmission and the magnitude of congestion
706
Decongest the transmission path by sending data at the decongestion rate from the sender to the receiver for the decongestion time
708
Adjust a data transmission rate in the transmission path to the sustainable rate of data transmission after the decongestion time is ended

FIG. 7

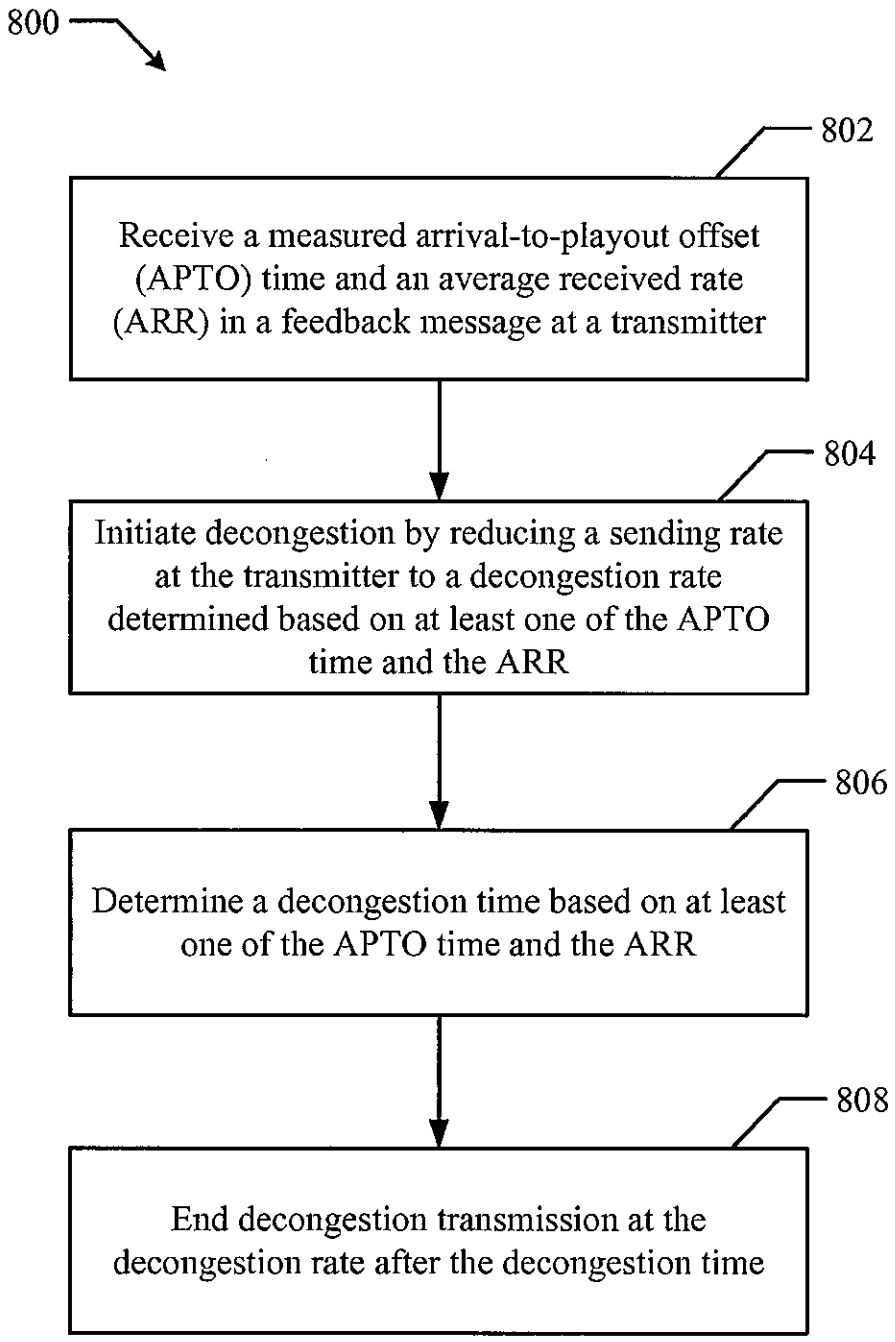
800
802
Receive a measured arrival-to-playout offset (APTO) time and an average received rate (ARR) in a feedback message at a transmitter
804
Initiate decongestion by reducing a sending rate at the transmitter to a decongestion rate determined based on at least one of the APTO time and the ARR
806
Determine a decongestion time based on at least one of the APTO time and the ARR
808
End decongestion transmission at the decongestion rate after the decongestion time

FIG. 8

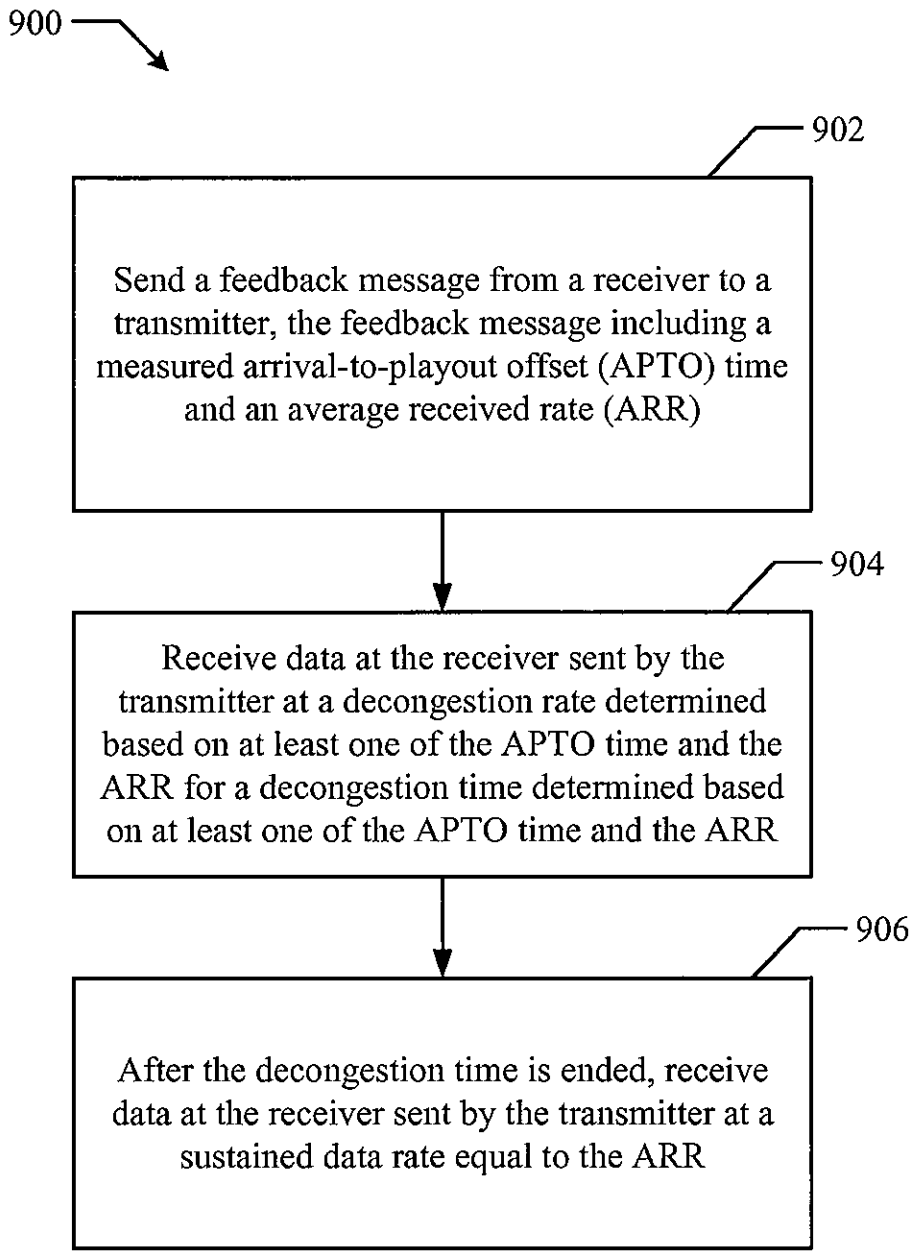
900
902
Send a feedback message from a receiver to a transmitter, the feedback message including a measured arrival-to-playout offset (APTO) time and an average received rate (ARR)
904
Receive data at the receiver sent by the transmitter at a decongestion rate determined based on at least one of the APTO time and the ARR for a decongestion time determined based on at least one of the APTO time and the ARR
906
After the decongestion time is ended, receive data at the receiver sent by the transmitter at a sustained data rate equal to the ARR

FIG. 9

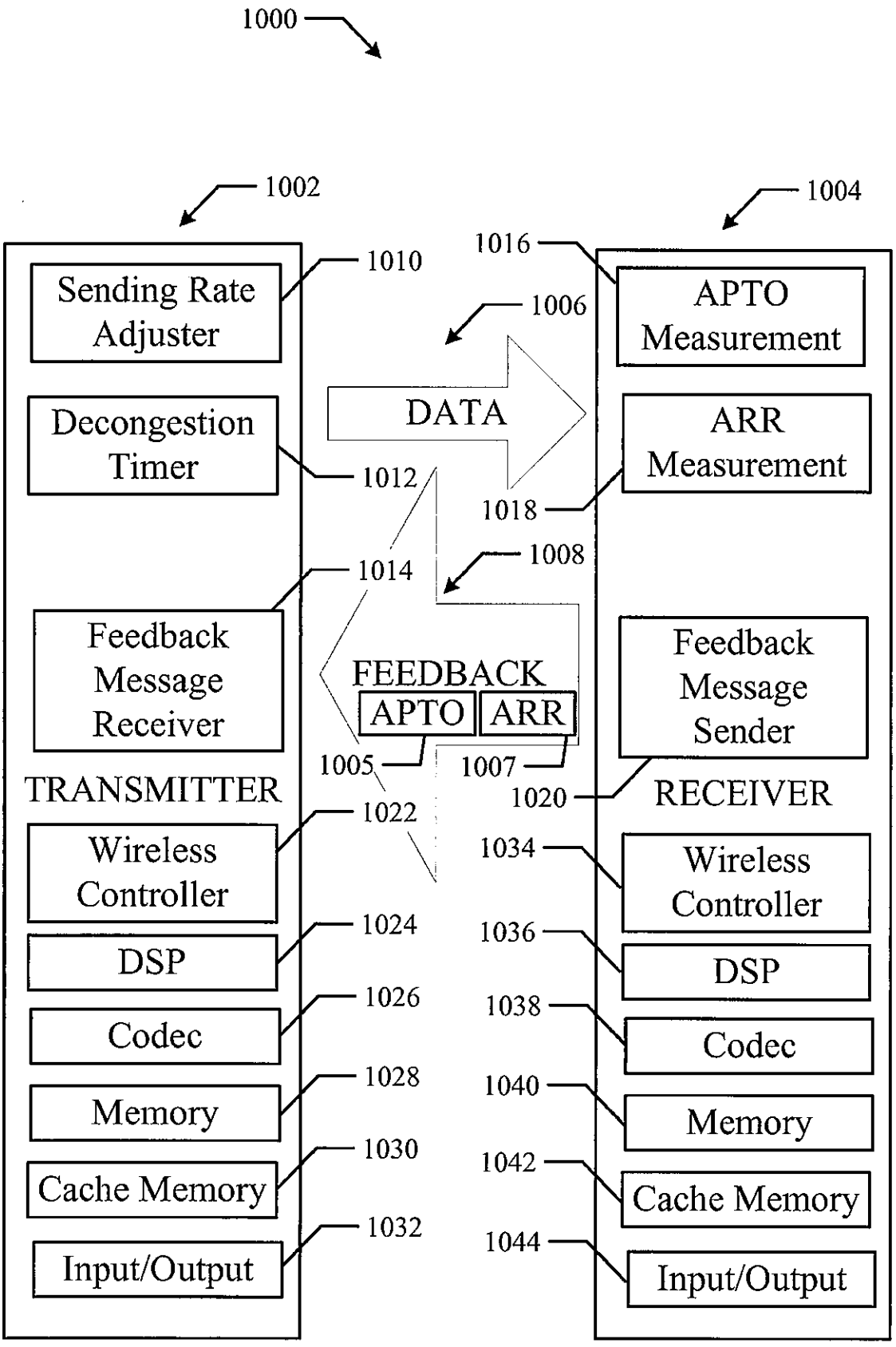
1000
1002
1004
1010
1016
Sending Rate Adjuster
1006
APTO Measurement
DATA
Decongestion Timer
ARR Measurement
1012
1018
1014
1008
Feedback Message Receiver
FEEDBACK
APTO
ARR
Feedback Message Sender
1005
1007
TRANSMITTER
1020
RECEIVER
1022
1034
Wireless Controller
Wireless Controller
1024
1036
DSP
DSP
1026
1038
Codec
Codec
1028
1040
Memory
Memory
1030
1042
Cache Memory
Cache Memory
1032
1044
Input/Output
Input/Output

FIG. 10