(12) INTERNATIONAL APPLICATION PUBLISHED UNDER THE PATENT COOPERATION TREATY (PCT)

(19) World Intellectual Property Organization
International Bureau

(43) International Publication Date
19 July 2007 (19.07.2007)

PCT

(10) International Publication Number
WO 2007/081615 A3

(51) International Patent Classification:
C10G 65/02 (2006.01)

(21) International Application Number:
PCT/US2006/061392

(22) International Filing Date:
30 November 2006 (30.11.2006)

(25) Filing Language: English

(26) Publication Language: English

(30) Priority Data:
11/293,057 2 December 2005 (02.12.2005) US

(71) Applicant *(for all designated States except US)*: **UOP LLC** [US/US]; John G. Tolomei, Assistant Secretary-Patent Matters, 25 East Algonquin Road, P.O. Box 5017, Des Plaines, Illinois 60017-5017 (US).

(72) Inventors; and

(75) Inventors/Applicants *(for US only)*: **ZIMMERMANN, Joseph E.** [US/US]; UOP LLC, 25 East Algonquin Road, P.O. Box 5017, Des Plaines, Illinois 60017-5017 (US). **LUEBKE, Charles P.** [US/US]; UOP LLC, 25 East Algonquin Road, P.O. Box 5017, Des Plaines, Illinois 60017-5017 (US). **BAKER, John B.** [US/US]; UOP LLC, 25 East Algonquin Road, P.O. Box 5017, Des Plaines, Illinois 60017-5017 (US).

(74) Common Representative: **UOP LLC**; John G. Tolomei, Assistant Secretary-Patent Matters, 25 East Algonquin Road, P.O. Box 5017, Des Plaines, Illinois 60017-5017 (US).

(81) Designated States *(unless otherwise indicated, for every kind of national protection available)*: AE, AG, AL, AM, AT, AU, AZ, BA, BB, BG, BR, BW, BY, BZ, CA, CH, CN, CO, CR, CU, CZ, DE, DK, DM, DZ, EC, EE, EG, ES, FI, GB, GD, GE, GH, GM, GT, HN, HR, HU, ID, IL, IN, IS, JP, KE, KG, KM, KN, KP, KR, KZ, LA, LC, LK, LR, LS, LT, LU, LV, LY, MA, MD, MG, MK, MN, MW, MX, MY, MZ, NA, NG, NI, NO, NZ, OM, PG, PH, PL, PT, RO, RS, RU, SC, SD, SE, SG, SK, SL, SM, SV, SY, TJ, TM, TN, TR, TT, TZ, UA, UG, US, UZ, VC, VN, ZA, ZM, ZW.

(84) Designated States *(unless otherwise indicated, for every kind of regional protection available)*: ARIPO (BW, GH, GM, KE, LS, MW, MZ, NA, SD, SL, SZ, TZ, UG, ZM, ZW), Eurasian (AM, AZ, BY, KG, KZ, MD, RU, TJ, TM), European (AT, BE, BG, CH, CY, CZ, DE, DK, EE, ES, FI, FR, GB, GR, HU, IE, IS, IT, LT, LU, LV, MC, NL, PL, PT, RO, SE, SI, SK, TR), OAPI (BF, BJ, CF, CG, CI, CM, GA, GN, GQ, GW, ML, MR, NE, SN, TD, TG).

Published:
— *with international search report*

[Continued on next page]

(54) **Title:** INTEGRATED HYDROCARBON CRACKING AND PRODUCT OLEFIN CRACKING

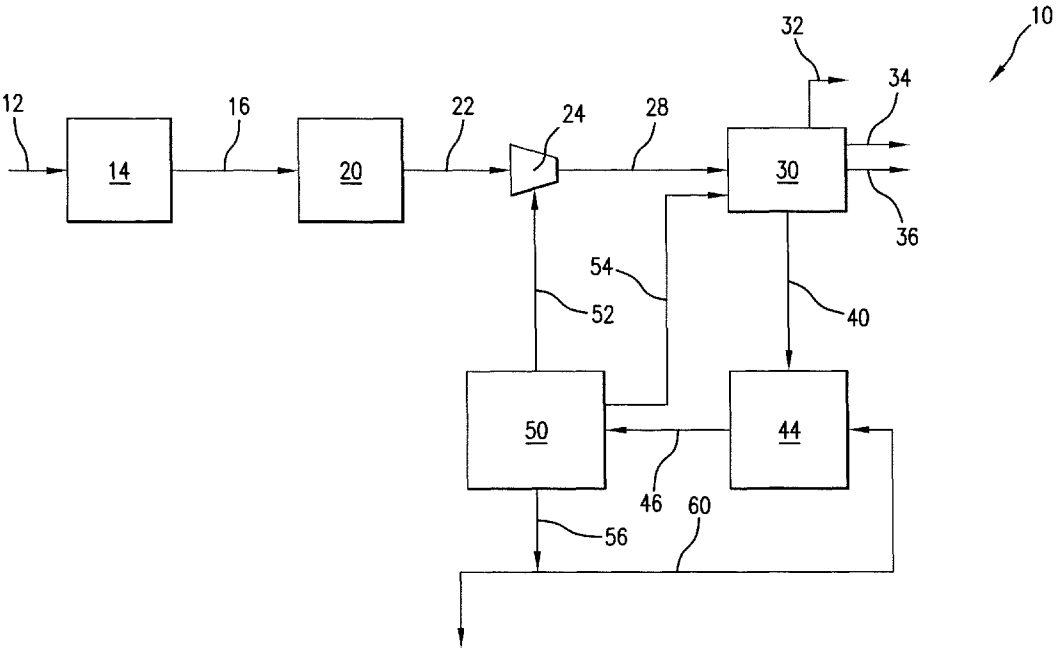

(57) **Abstract:** Processing scheme and arrangement for increasing the relative yield of light olefins involves integration of the cracking a heavy hydrocarbon feedstock to produce an effluent comprising a range of hydrocarbon products including C_4-C_7 olefins and the subsequent cracking at least a portion of the C_4-C_7 olefins to produce additional light olefins.

WO 2007/081615 A3

— *before the expiration of the time limit for amending the claims and to be republished in the event of receipt of amendments*

(88) Date of publication of the international search report:
18 October 2007

For two-letter codes and other abbreviations, refer to the "Guidance Notes on Codes and Abbreviations" appearing at the beginning of each regular issue of the PCT Gazette.