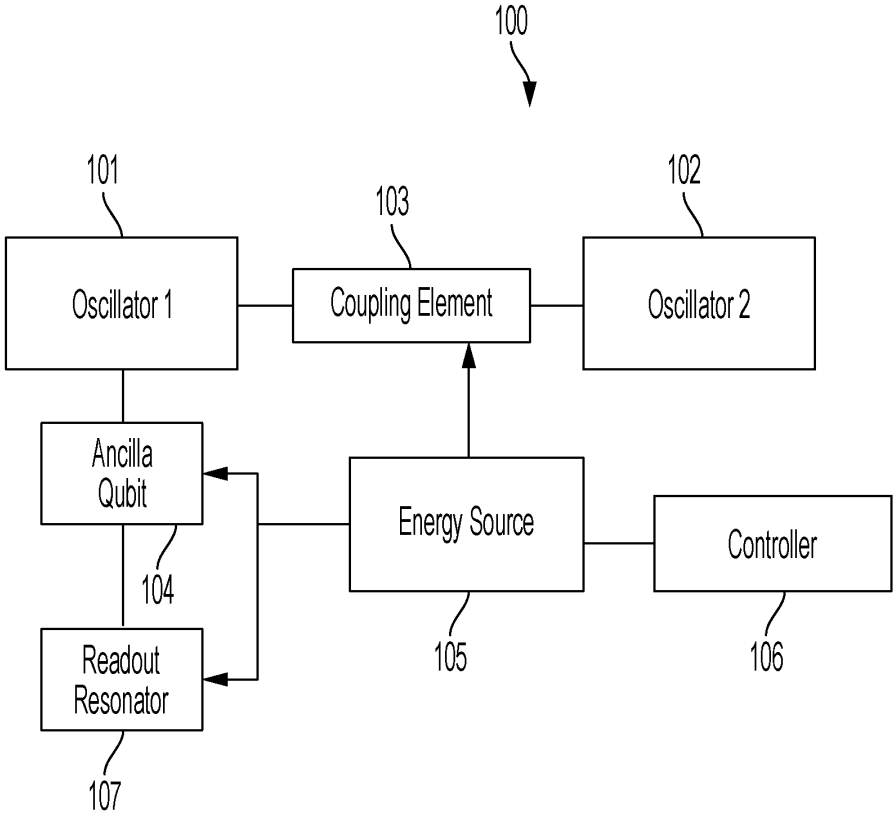
100
101
Oscillator 1
103
Coupling Element
102
Oscillator 2
Ancilla Qubit
104
Energy Source
105
Controller
106
Readout Resonator
107

FIG. 1

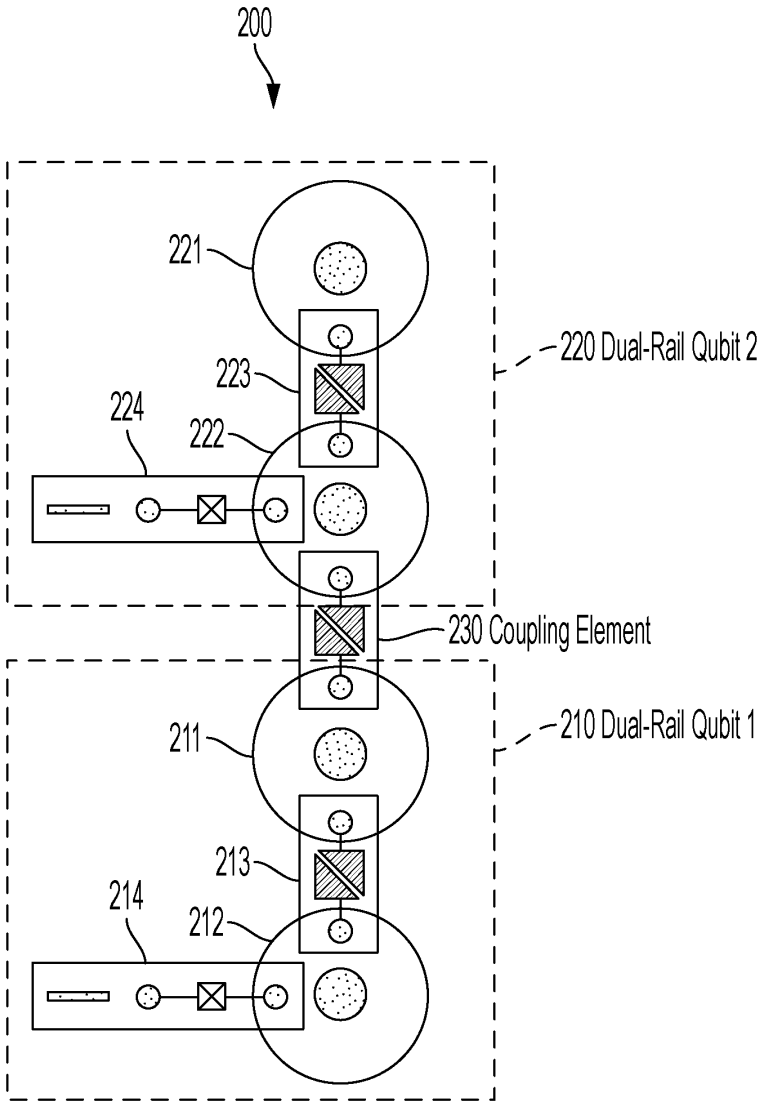
200
221
220 Dual-Rail Qubit 2
223
224
222
230 Coupling Element
211
210 Dual-Rail Qubit 1
213
214
212

FIG. 2

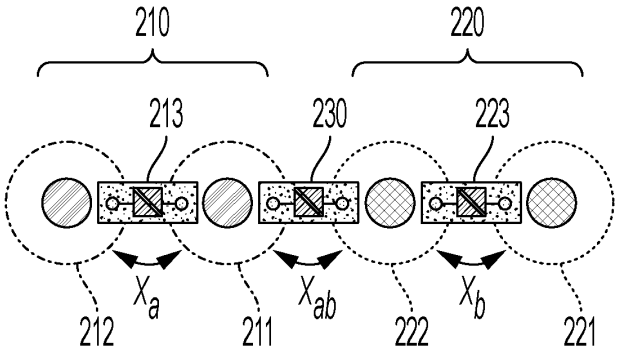

FIG. 3

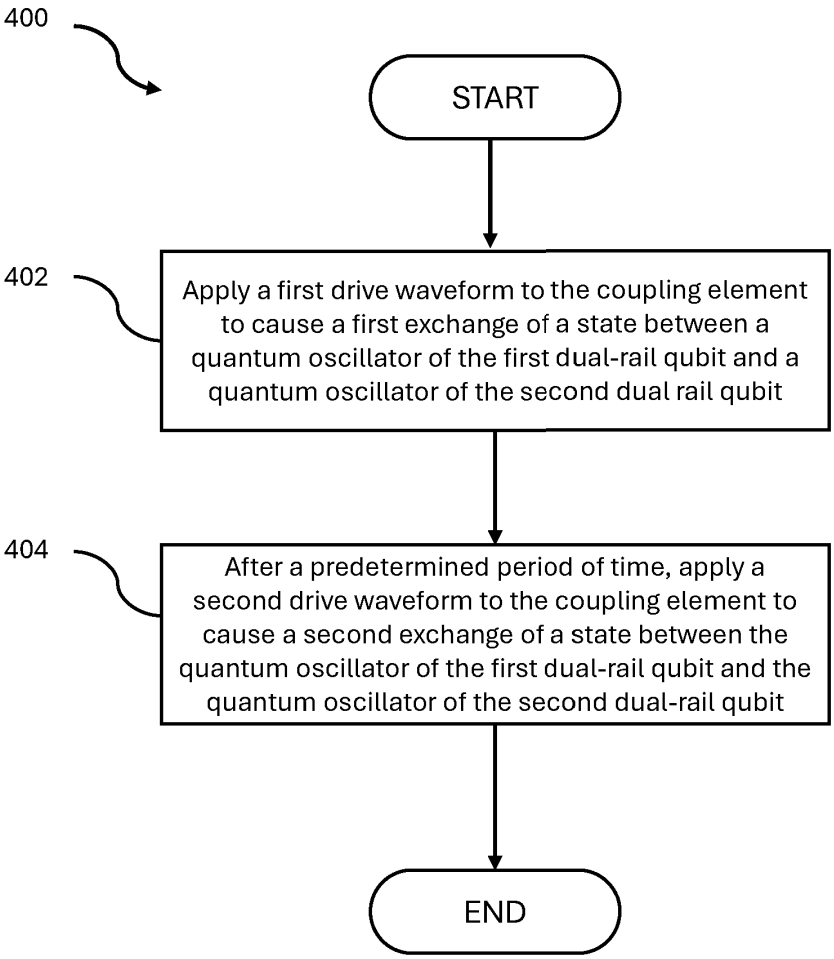
400
START
402
Apply a first drive waveform to the coupling element to cause a first exchange of a state between a quantum oscillator of the first dual-rail qubit and a quantum oscillator of the second dual rail qubit
404
After a predetermined period of time, apply a second drive waveform to the coupling element to cause a second exchange of a state between the quantum oscillator of the first dual-rail qubit and the quantum oscillator of the second dual-rail qubit
END

FIG. 4

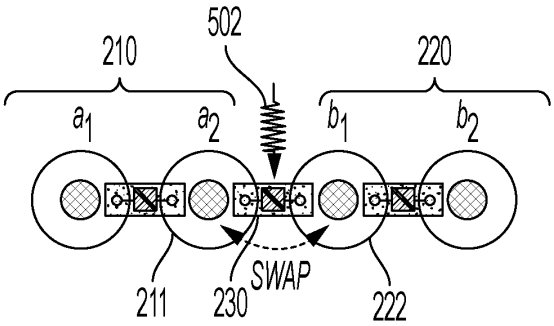

FIG. 5A-1

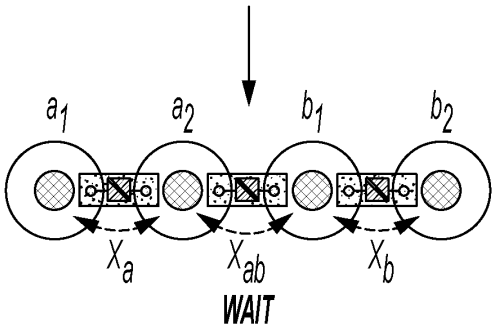

FIG. 5A-2

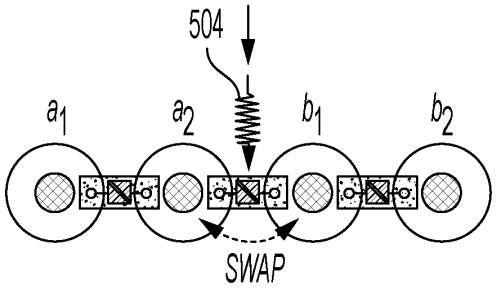

FIG. 5A-3

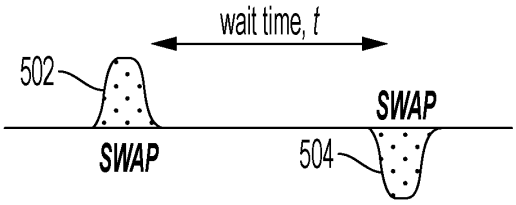

FIG. 5B

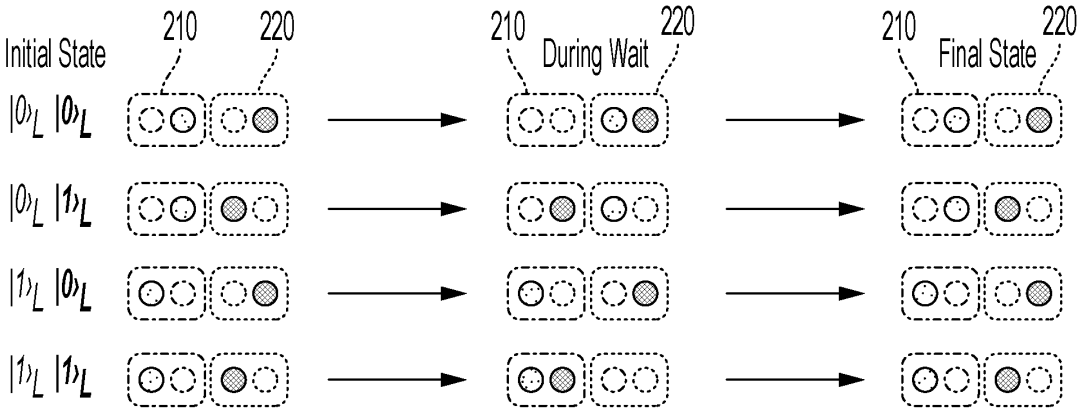
Initial State
210
220
During Wait
210
220
Final State
210
220
$|0\rangle_L$ $|0\rangle_L$
$|0\rangle_L$ $|1\rangle_L$
$|1\rangle_L$ $|0\rangle_L$
$|1\rangle_L$ $|1\rangle_L$

FIG. 5C

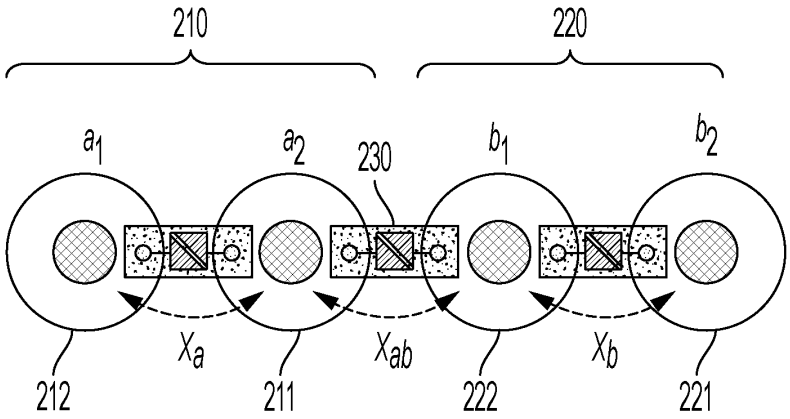
210
220
a_1
a_2
230
b_1
b_2
X_a
X_{ab}
X_b
212
211
222
221

FIG. 6A

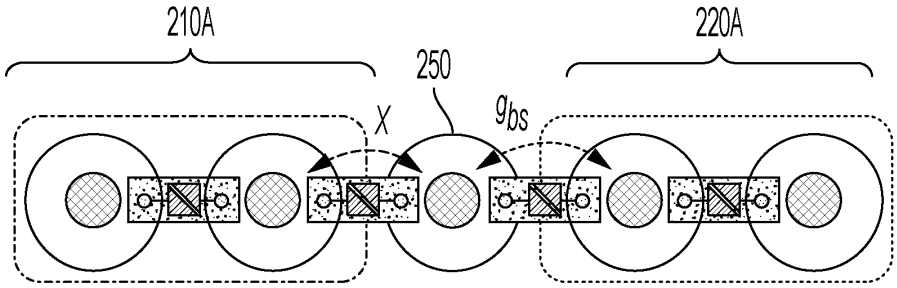
210A
220A
250
X
g_{bs}

FIG. 6B

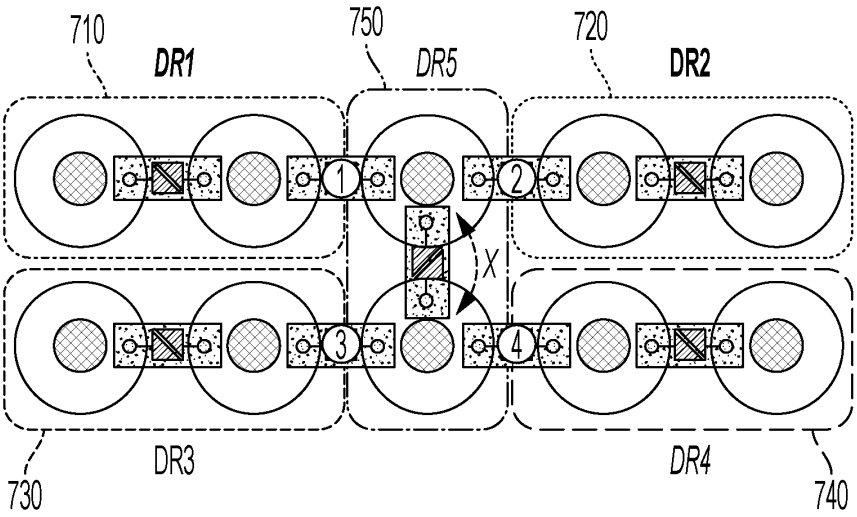
710
DR1
750
DR5
720
DR2
1
2
X
3
4
DR3
DR4
730
740

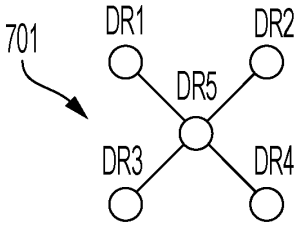
701
DR1
DR2
DR5
DR3
DR4

FIG. 7

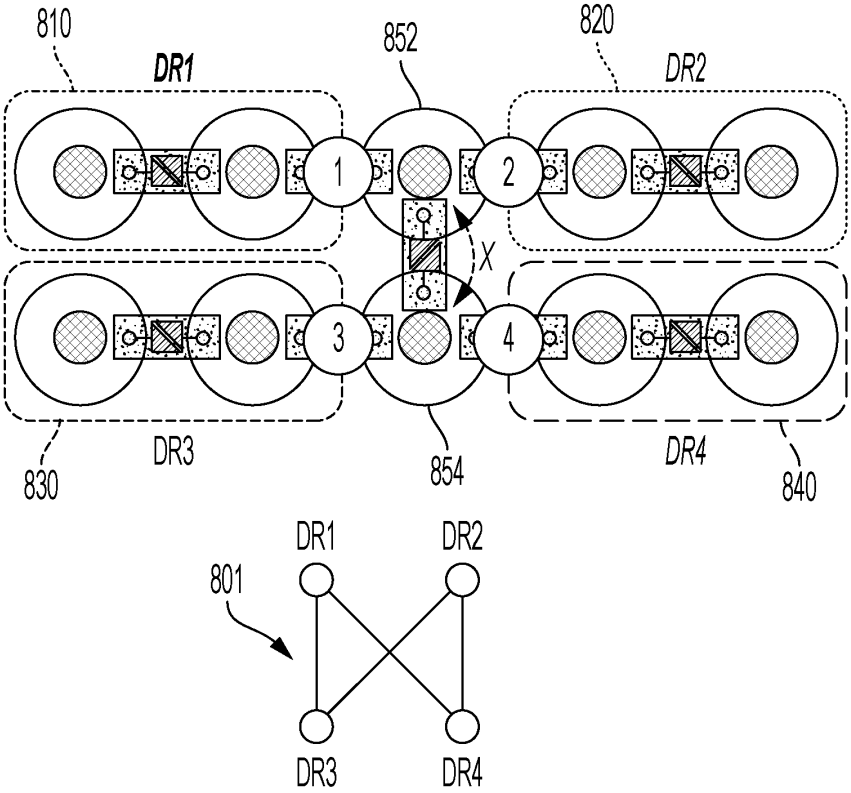
810
DR1
852
820
DR2
1
2
X
3
4
DR3
854
DR4
830
840
801
DR1
DR2
DR3
DR4

FIG. 8A

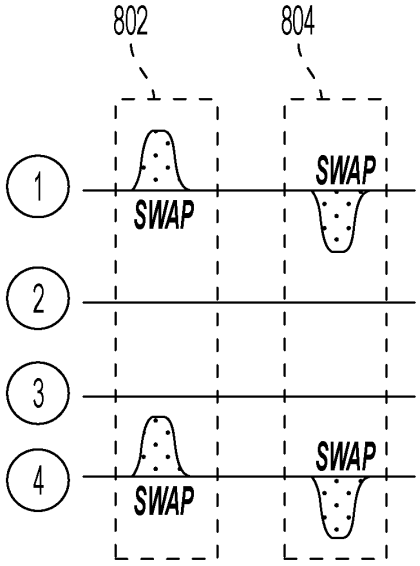
802
804
1
SWAP
SWAP
2
3
4
SWAP
SWAP

FIG. 8B

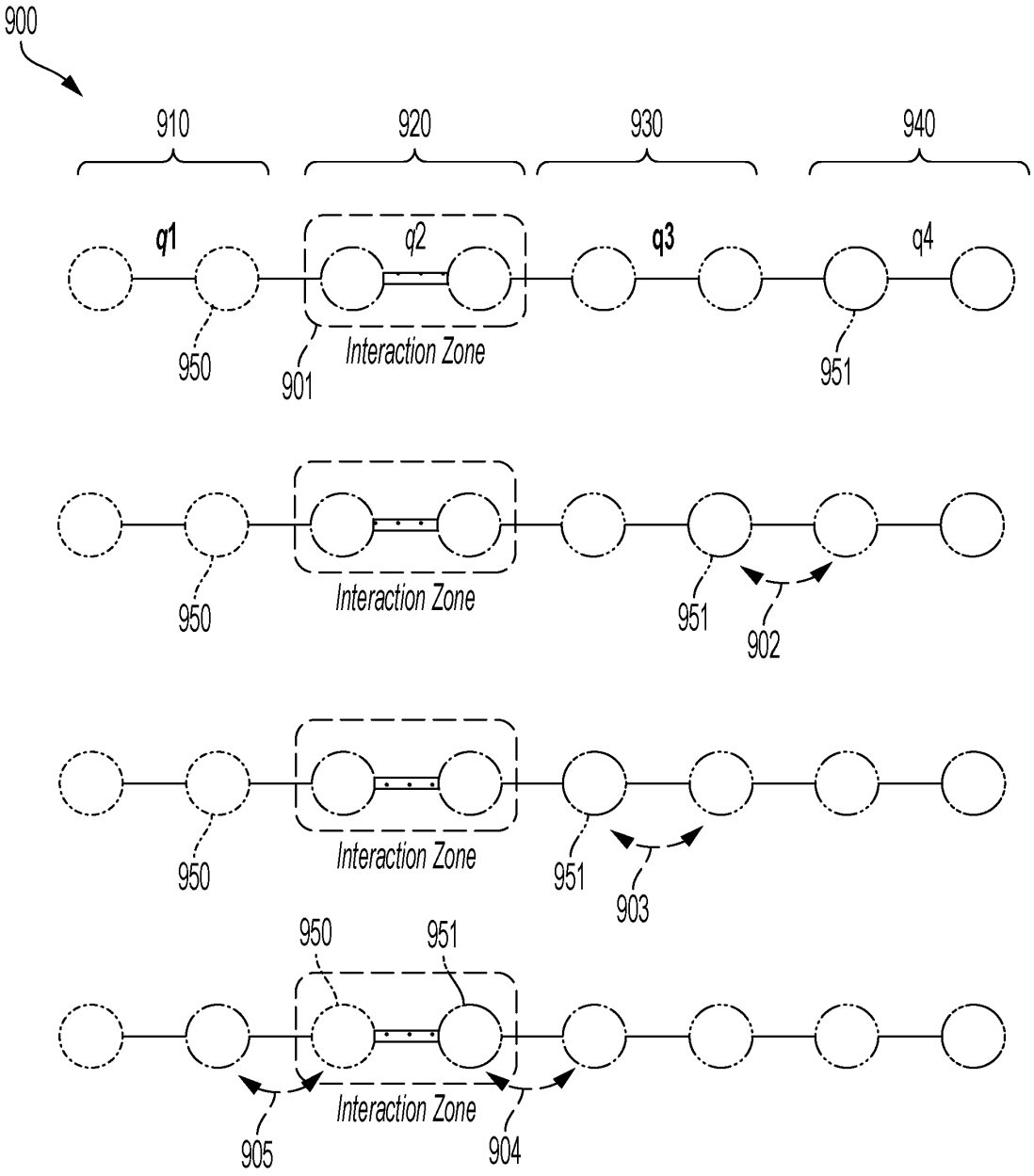
900
910
920
930
940
q1
q2
q3
q4
950
901
Interaction Zone
951
950
Interaction Zone
951
902
950
Interaction Zone
951
903
950
951
Interaction Zone
905
904

FIG. 9

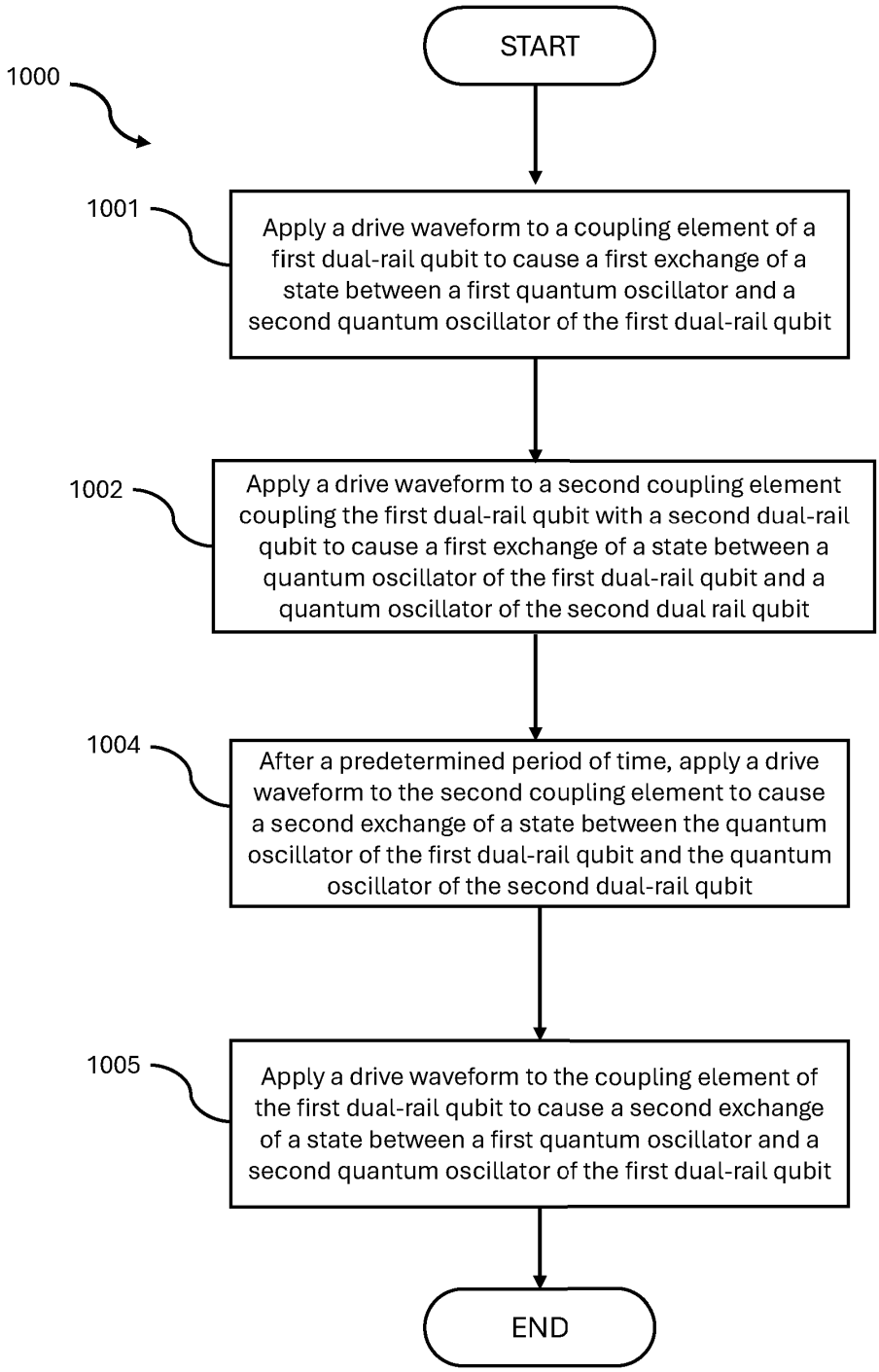
START
1000
1001
Apply a drive waveform to a coupling element of a first dual-rail qubit to cause a first exchange of a state between a first quantum oscillator and a second quantum oscillator of the first dual-rail qubit
1002
Apply a drive waveform to a second coupling element coupling the first dual-rail qubit with a second dual-rail qubit to cause a first exchange of a state between a quantum oscillator of the first dual-rail qubit and a quantum oscillator of the second dual rail qubit
1004
After a predetermined period of time, apply a drive waveform to the second coupling element to cause a second exchange of a state between the quantum oscillator of the first dual-rail qubit and the quantum oscillator of the second dual-rail qubit
1005
Apply a drive waveform to the coupling element of the first dual-rail qubit to cause a second exchange of a state between a first quantum oscillator and a second quantum oscillator of the first dual-rail qubit
END

FIG. 10

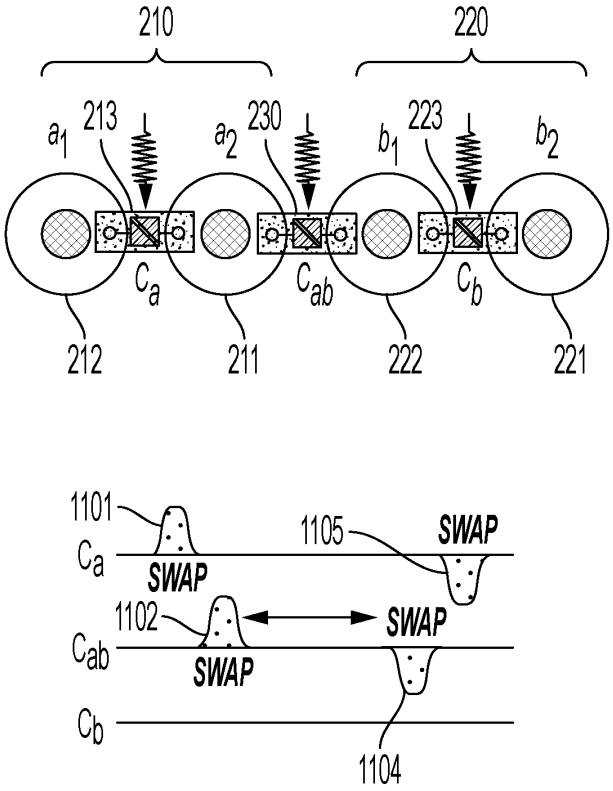
210
220
a_1
213
a_2
230
b_1
223
b_2
C_a
C_{ab}
C_b
212
211
222
221
1101
C_a
SWAP
1105
SWAP
1102
SWAP
SWAP
C_{ab}
C_b
1104

FIG. 11

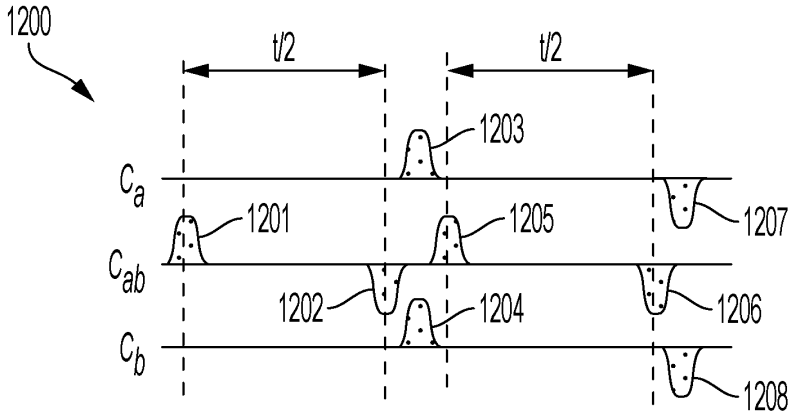

FIG. 12A

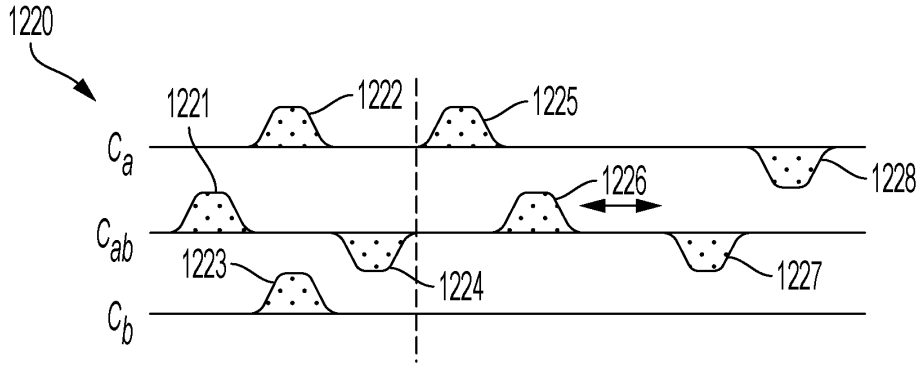

FIG. 12B

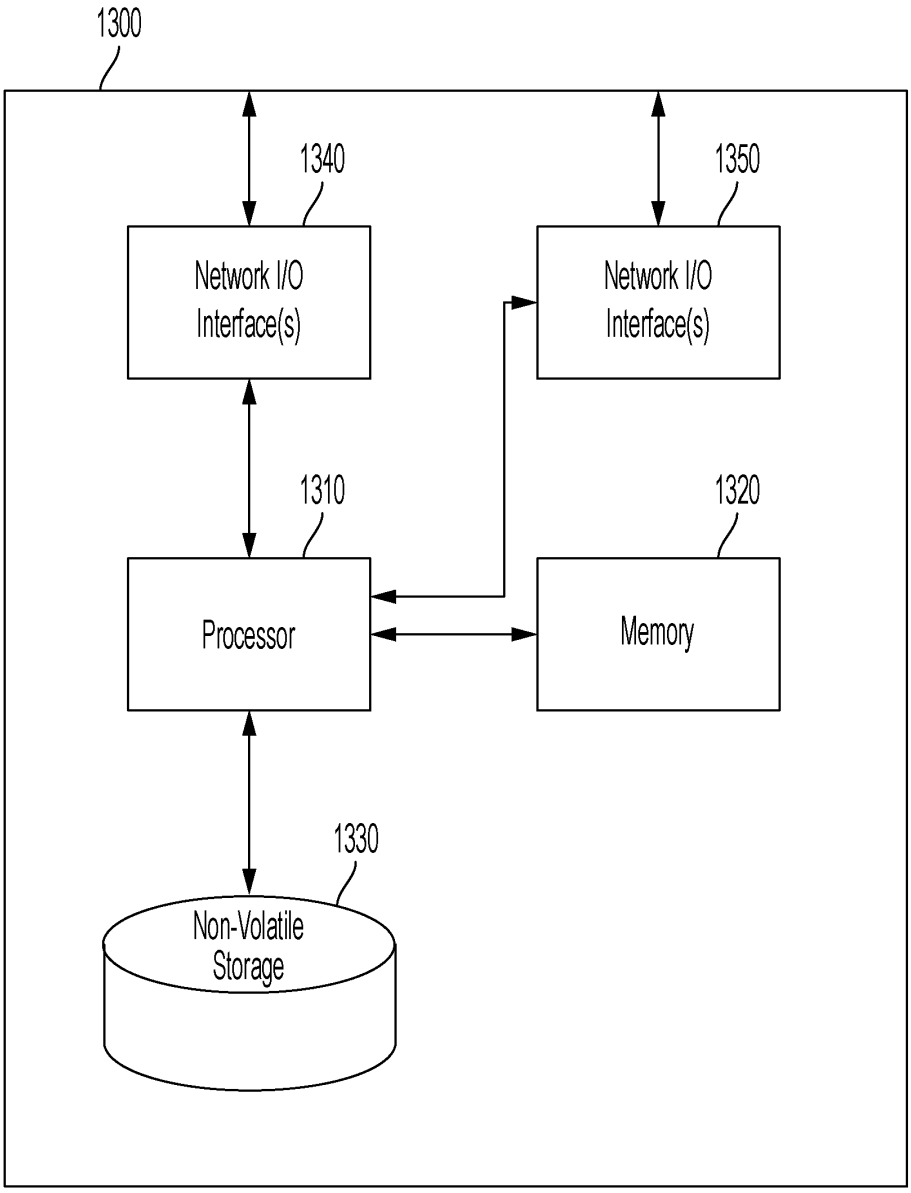
1300
1340
1350
Network I/O Interface(s)
Network I/O Interface(s)
1310
1320
Processor
Memory
1330
Non-Volatile Storage

FIG. 13